THIS DRAWING IS UNPUBLISHED. RELEASED FOR PUBLICATION -,- .
© COPYRIGHT - By - ALL RIGHTS RESERVED.

LOC	DIST
AF	50

REVISIONS

P	LTR	DESCRIPTION	DATE	DWN	APVD
	C	REVISED PER ECR-12-013459	28NOV2012	KH	PD

1 CONTINUOUS STRIP ON REELS

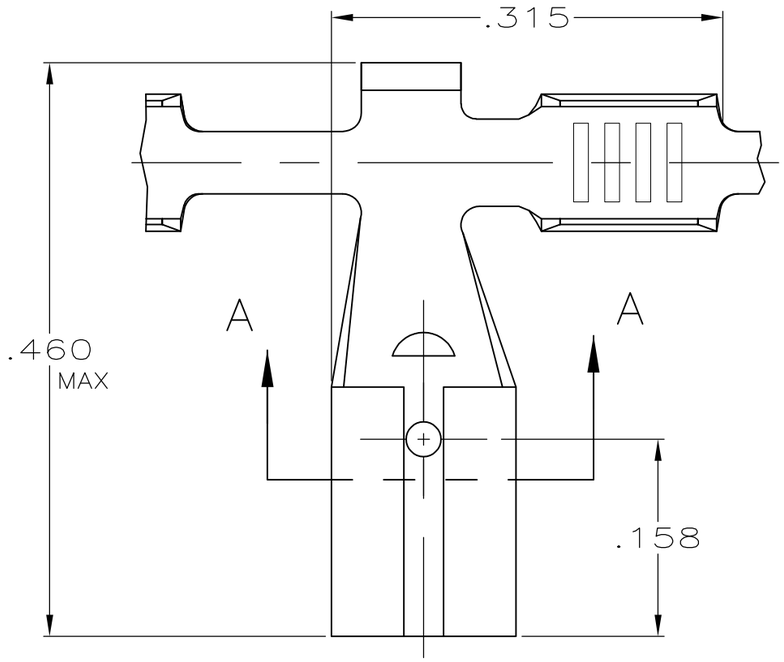

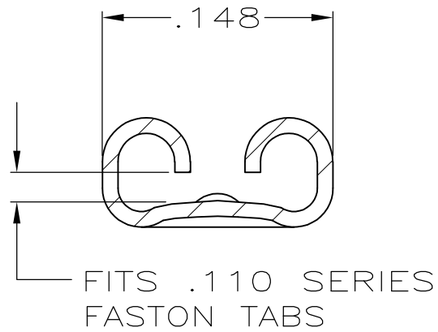

SECTION A–A
SCALE 10:1

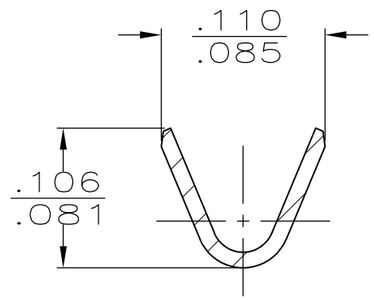

SECTION B–B
SCALE 10:1

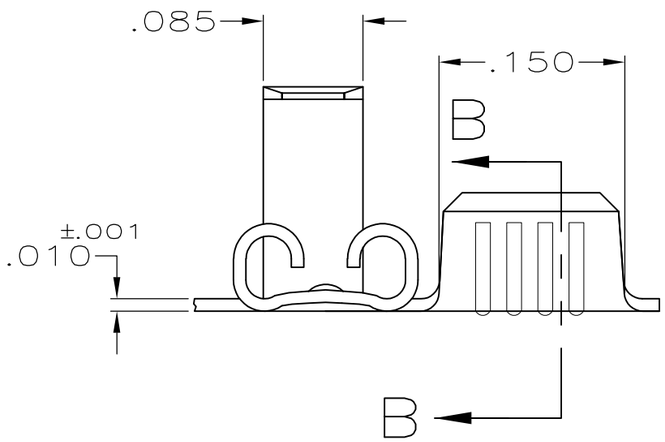

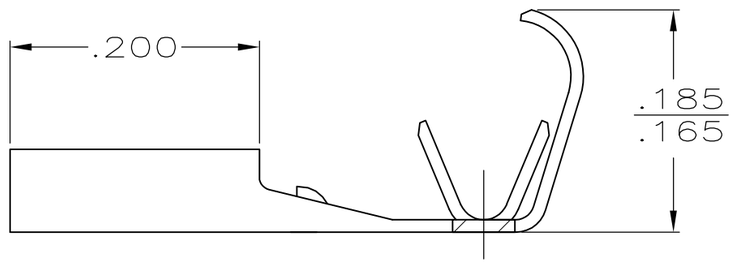

.065–.100 DIA	22–18 AWG	.016	61459–1
INSULATION RANGE	WIRE SIZE	MATING TAB THK ±.001	PART NO.

THIS DRAWING IS A CONTROLLED DOCUMENT.

DIMENSIONS: INCHES

TOLERANCES UNLESS OTHERWISE SPECIFIED:

0 PLC	± –
1 PLC	± –
2 PLC	± –
3 PLC	± .015
4 PLC	± –
ANGLES	± –

MATERIAL: BRASS

FINISH: PRE–TIN

DWN JR RUTH 4/24/91
CHK MS FEHER 4/24/91
APVD C MEYERS 4/24/91
PRODUCT SPEC —
APPLICATION SPEC —
WEIGHT —

TE Connectivity

NAME: RECEPTACLE, FASTON, FLAG, .110 SERIES

SIZE	CAGE CODE	DRAWING NO	RESTRICTED TO
A3	00779	C-61459	—

CUSTOMER DRAWING

SCALE	SHEET	REV
8:1	1 OF 1	C