PRODUCT NUMBER
73398–YXXXLF

RoHS COMPATIBLE, NOTE 6.
PACKAGING OPTIONS, NOTE 3.

PLATING

1= 0.76µm GOLD/GXT ON CONTACT AREA, 2µm TIN MIN ON TAILS

4= 2.0µm TIN MIN FULL PLATED

5= 0.25µm GOLD/GXT ON CONTACT AREA, 2µm TIN MIN ON TAILS

8= 0.38µm GOLD/GXT ON CONTACT AREA, 2µm TIN MIN ON TAILS

1.27µm NICKEL MIN UNDERLAYER FOR ALL PLATING VERSIONS

STYLE	SIZE	DIM"A"	OMIT PINS
01	2x05	5.84	A5
02	2x03	5.84	B2
03	2x04	5.84	B1
04	2x11	8.38	A6
05	2x20	8.38	B10
06	2x05	8.38	A5
07	2x08	5.84	B7
08	2x04	5.84	B4
09	2x20	5.84	A11
10	2x07	5.84	A4–B7
11	2x13	5.84	A3–B1
12	2x12	5.84	A2
13	2x05	5.84	B5
14	2x05	5.84	B4
15	2x03	5.84	A2–B2
16	2x03	16.40	A2
17	2x05	5.84	A4
18	2x05	5.84	A2,3,4 B2,3,4

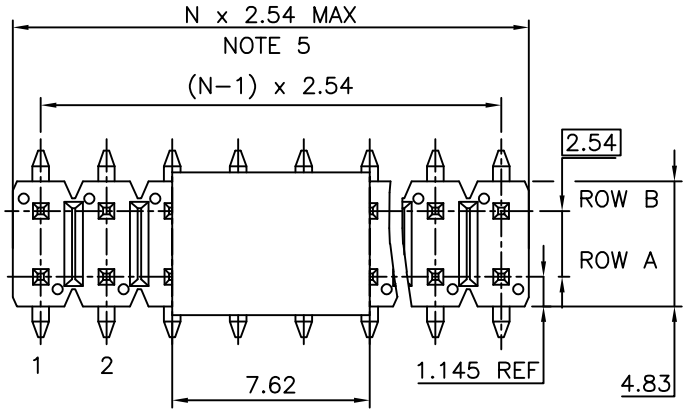

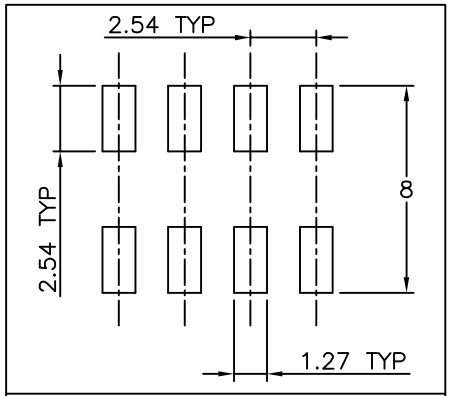

RECOMMENDED PAD LAYOUT

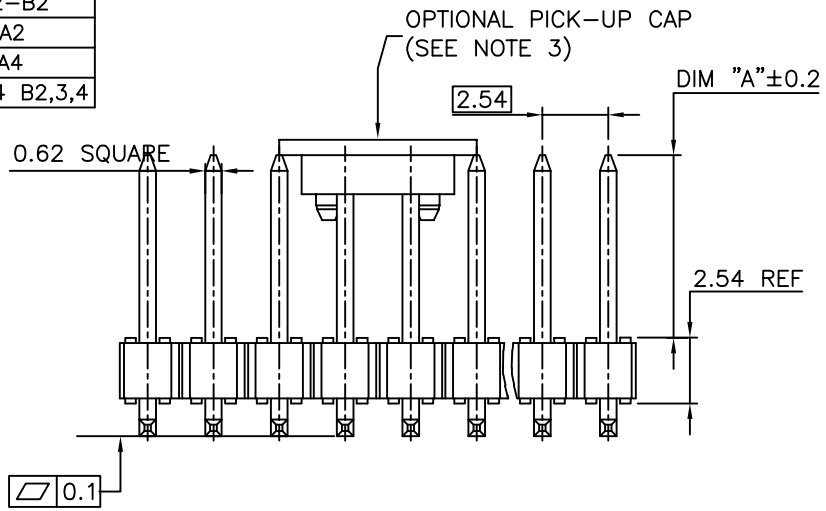

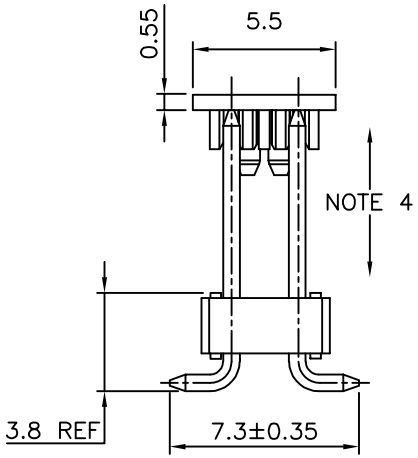

NOTES:

1. HOUSING MAT'L : HIGH TEMPERATURE THERMOPLASTIC. UL94V–0 COLOR: BLACK
2. PIN MATERIAL : PHOSPHOR BRONZE
3 – PACKAGING OPTIONS:
   = POLY BAGS
   B = TUBE + CAP
   A = TAPE & REEL WITH CAP, AS AVAILABLE
4. 9N MIN RETENTION IN EITHER DIRECTION
5. TO DETERMINE DIMENSIONS :
   N = NUMBER OF POSITIONS PER ROW
   EXAMPLE : 8 POS N x 2.54 = 20.32mm
6. RoHS COMPATIBLE PRODUCT SPECIFICATIONS
   a – PLATING:
   – "LF" MEANS THE PRODUCT IS LEAD–FREE, 2µm MINIMUM MATTE TIN OVER 1.27µm MINIMUM NICKEL UNDERPLATE.
   b – MANUFACTURING PROCESS COMPATIBILITY
   – THE HOUSING WILL WITHSTAND EXPOSURE TO 260°C PEAK TEMPERATURE FOR 30 SECONDES IN A CONVECTION, INFRA–RED OR VAPOR PHASE REFLOW OVEN.
   c – LABELING:
   – MEETS PACKAGING SPECS AS PER GS–14–920
   d – LEGAL STATEMENT: SEE GS–47–0004

ltr	ecn no	dr	date
R	B18983	LMU	14.10.03
S	B–20597	AMA	15.03.30
T	F–23055	AMA	16.01.15
U	F–26753	DDE	17.04.20
V	F–28256	LMU	17.10.25
W	F–31154	DDE	18.09.04

mat'l. code
surface ISO 1302
tolerance ISO 406 ISO 1101
tolerances unless otherwise specified: angles; linear x.x ±0.3, x.xx ±0.13, x.xxx ±0.05
projection
mm
scale 5:1
dr L.MULIN 99.04.12
engr J COMPAGNON 99.04.12
chr
appd JMC 99.04.12
sheet index
revision sheet

product family: HEADER
title: HEADER DR, DUPLEX SMT POLARIZED
dwg no 73398
sheet 1 of 1
size A3
type CUSTOMER Drawing

FCIconnect.com
Copyright FCI