Feb.1.2018 Copyright 2018 HIROSE ELECTRIC CO., LTD. All Rights Reserved.

	COUNT	DESCRIPTION OF REVISIONS	BY	CHKD	DATE		COUNT	DESCRIPTION OF REVISIONS	BY	CHKD	DATE
1	2	RE-F-10586	K.S.	H.O	05.02.13						. .
					. .						. .
					. .						. .

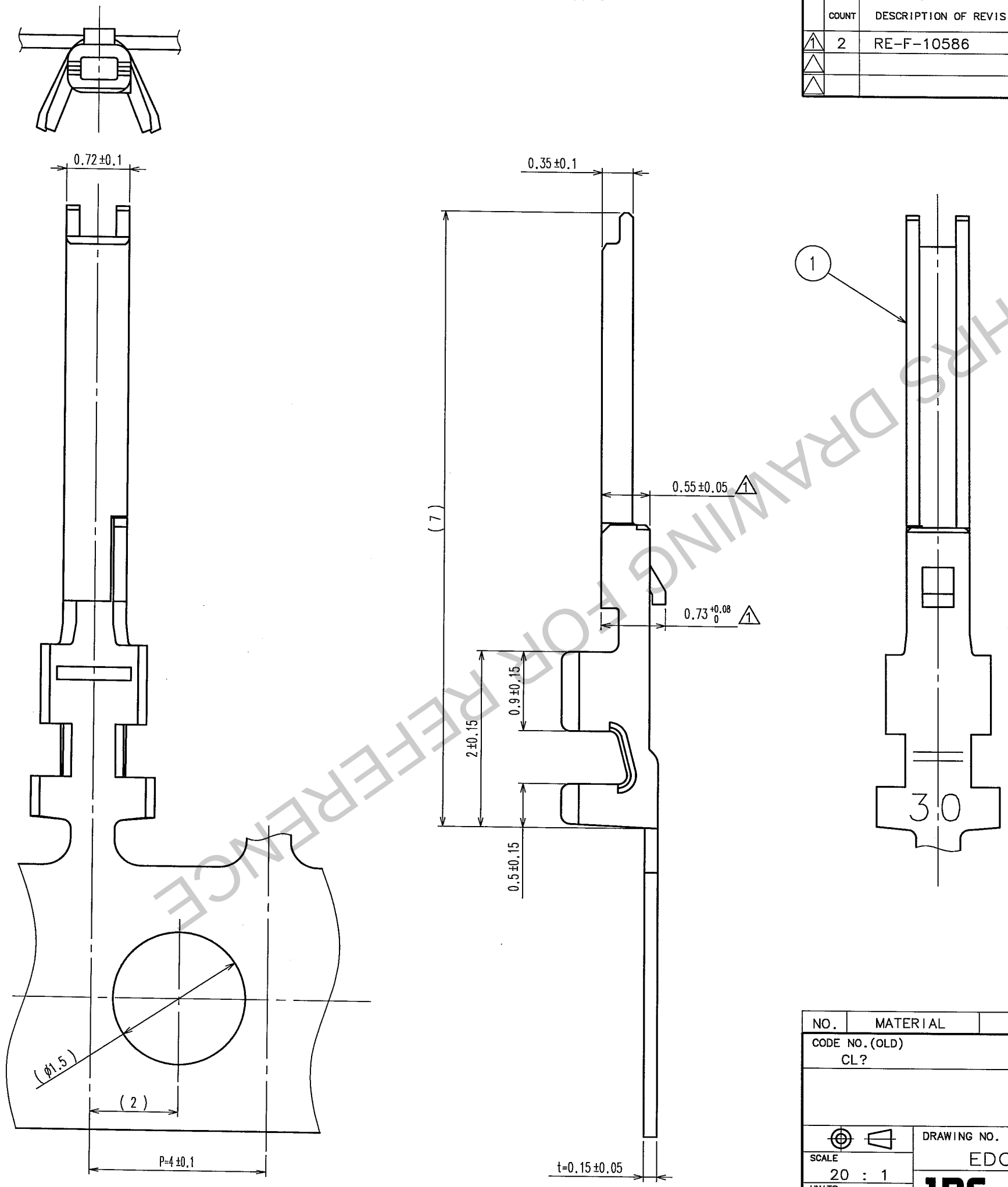

NOTE 1 1REEL:20000 TERMINAL
2 THE DIMENSIONS IN PARENTHESES ARE FOR REFERENCE.

HRS DRAWING FOR REFERENCE

NO.	MATERIAL	FINISH, REMARKS
1	PHOSPHOR BRONZE	CONTACT AREA:GOLD 0.1μm min BARREL AREA:TIN-PLATING 1μm min UNDER PLATING:NICKEL 0.5μm min

TO

CODE NO.(OLD) CL?

DRAWN	DESIGNED	CHECKED	APPROVED	RELEASED
K.SHIBUYA 04.12.27	K.SHIBUYA 04.12.28	H.YAMAGUCHI 04.12.28	H.OKAWA 04.12.28	. .

SCALE 20 : 1
UNITS mm

DRAWING NO. EDC3-155324

HRS HIROSE ELECTRIC CO., LTD

PART NO. FX15-3032PCFA

CODE NO. CL575-2001-8

1/1

FORM NO.229