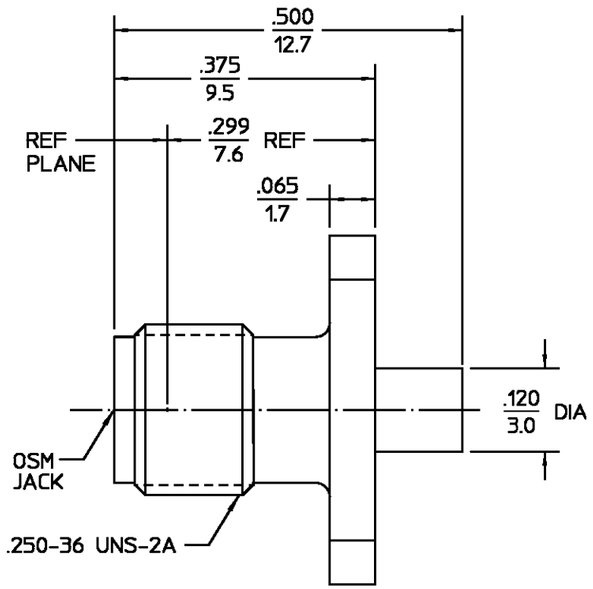

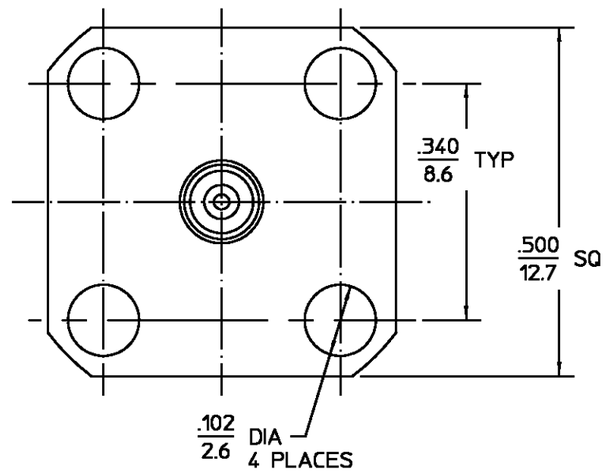

DESIGNED FOR USE WITH .085 SEMI-RIGID CABLE	
CABLE ENTRY DIAMETER MINIMUM	
CONTACT	.020
HOUSING	.089

REVISIONS

REV	DESCRIPTION	DATE	APPROVED
01_4	REVISED	04/12/95	
01_5	REVISED ELECTRICAL SPECS, ECN 98-0001	8/19/1998	S. Morby

ELECTRICAL	
Nominal Impedance (Ohms)	50
Frequency Range (GHz)	DC to 18.0
Volt Rating (VRMS MAX)	
@ Sea Level	335
VSWR	1.07 +.008 f(GHz)
Insertion Loss (dB MAX)	$.03\sqrt{f(GHz)}$
RF Leakage (dB MIN)	[-90-f(GHz)]
Corona, 70,000 Ft (VRMS MIN)	250
Dielectric Withstanding Voltage	
(VRMS MIN) @ Sea Level	1,000
Contact Resistance (Milliohms MAX)	
Center Contact	3.0
Outer Contact	2.0
Cable to Housing	0.5
RF High Potential @ Sea Level	
(VRMS MIN @ 5 MHz)	670
I.R.(Megohms MIN)	10,000

MECHANICAL	
Interface Dimensions MIL-STD-348A, Fig. 310.2	
Recommended Mating Torque	N/A
Mating Characteristics:	
Insertion (MAX Lbs)	3.0
Withdrawal (MIN Oz)	1.0
Force to Engage and Disengage (In-Lbs MAX)	2.0
Center Contact Captivation	
Axial (Lbs)	6.0
Radial (In-Oz)	N/A
Cable Retention	
Axial Force (Lbs MIN)	30.0
Torque (In-Oz)	16.0
Weight (Grams)	TBD

ENVIRONMENTAL
Temperature Rating -65°C to +165°C
Vibration MIL-STD-202, Method 204, Condition D.
Shock MIL-STD-202, Method 213, Condition I.
Thermal Shock MIL-STD-202, Method 107, Condition B, Except High Temp +115°C
Moisture Resistance MIL-STD-202, Method 106
Corrosion - MIL-STD-202, Method 101, Condition B, 5% salt spray

.XXX = in
XX.X = mm (REF)

COMPONENT	MATERIAL	FINISH
HOUSING	STAINLESS STEEL PER ASTM-A484 AND ASTM-A582, TYPE 303	GOLD PLATE PER MIL-G-45204
DIELECTRIC	PTFE FLUOROCARBON PER ASTM-D-1457	N/A
CENTER CONTACT	BERYLLIUM COPPER PER ASTM-B-196 OR ASTM-B-197, ALLOY C17300, CONDITION H	GOLD PLATE PER MIL-G-45204

UNLESS OTHERWISE SPECIFIED DIMENSIONS ARE IN INCHES

FRAC. ± 1/64 DEC. ±.005 ANGLES ± 1°

		DATE
DRAWN BY	RSM	9/27/68
CHECKED BY	BW	9/27/68
APP'D BY	D. NANIA	10/3/68

AMP

AMP Incorporated
140 Fourth Avenue
Waltham, MA 02451-7599

These drawings and specifications are the property of M/A COM Interconnect Div. and shall not be reproduced or copied or used in whole or in part as the basis for the manufacture or sale of item(s) without written permission.

USE ASS'Y PROCEDURE

408-04833
(20-010)

NO. A.P.

TITLE OSM 4 HOLE FLANGE MOUNT CABLE JACK DIRECT SOLDER ATTACHMNET

SIZE	CODE IDENT NO.		REV
B	26805	2006-5012-00	01_5

SCALE 5 : 1 SHEET 1 OF 1

CUSTOMER DRAWING

AMP PART # 1051049-1
SHEET 1 OF 1 REV A