Two Pole Panel-Mount Fuseholder
For 13/32″ × 1½″ Fuses

HPS2 Series

Catalog Symbol: HPS2
Description: Meets requirement of UL 1598 that both poles be removed simultaneously.
Fuse Type: 13/32” x 1-1/2”
Agency Information: UL 512 Recognized,
(Guide IZLT2, File E14853)
CSA Certified: (Class 6225-01, File 47235)
Flammability Rating: 94V-0
Terminals: 1/4” quick connect / solder
Electrical Rating: 30A @ 600V (20A max when used with quick connect terminals.)

Catalog Symbol	
HPS2	standard 10-in carton
BK/HPS2	bulk 100-in carton

- When insulated terminals are required, 1-1/4” diameter shrink wrap to be used
- No tension on line (rear) terminal allowed
- 90º clockwise rotation to lock fuse carrier in body

Dimensional Data

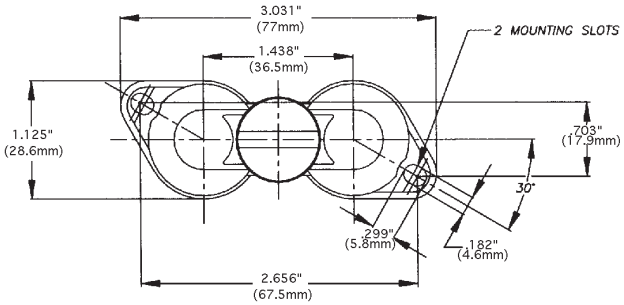

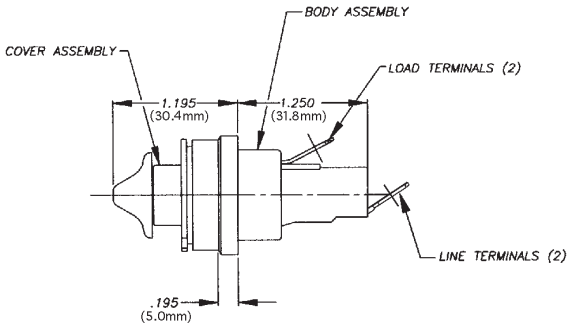

Panel Mount Dimensions

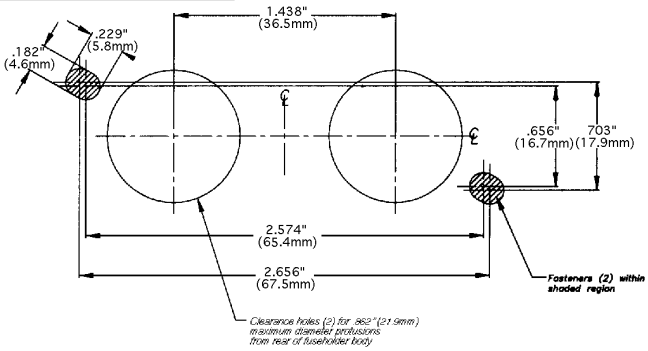

Maximum panel thickness, mounting flange in front of panel

Assumes Pollution Degree 3 per UL 840:
Conductive pollution, or dry, nonconductive pollution that becomes conductive due to condensation that is expected.

Maximum panel thickness *not including any sealing gaskets.*

System Voltage	600V		480		277		240		120	
Fuseholder	mm	Inches	mm	Inches	mm	Inches	mm	Inches	mm	Inches
HPS2	1.50	1/32”	2.39	3/32”	6.66	1/4”	7.21	9/32”	8.69	5/8”

Thicker panels may be used if fuse holder load terminal is fully insulated, using a UL recognized (VW-1) insulative heat-shrink tubing, or if anticipated environment is of Pollution Degree 1 or 2, or if panel is nonconductive.

Pollution Degree 2- Normally, only nonconductive pollution. However, a temporary conductivity caused by condensation may be expected.
Pollution Degree 1- No pollution or only dry, nonconductive pollution. The pollution has no influence.

Maximum panel thickness, mounting flange behind the panel: 5.08mm/0.200” (flush to knob collar)

The only controlled copy of this Data Sheet is the electronic read-only version located on the Bussmann Network Drive. All other copies of this document are by definition uncontrolled. This bulletin is intended to clearly present comprehensive product data and provide technical information that will help the end user with design applications. Bussmann reserves the right, without notice, to change design or construction of any products and to discontinue or limit distribution of any products. Bussmann also reserves the right to change or update, without notice, any technical information contained in this bulletin. Once a product has been selected, it should be tested by the user in all possible applications.