THIS DRAWING IS UNPUBLISHED. RELEASED FOR PUBLICATION -,- .
© COPYRIGHT - By - ALL RIGHTS RESERVED.

LOC	DIST
J	—

REVISIONS 変更

P	LTR	DESCRIPTION	DATE	DWN	APVD
	B3	REVISED ECR-15-009159	18JUN15	AY	RK

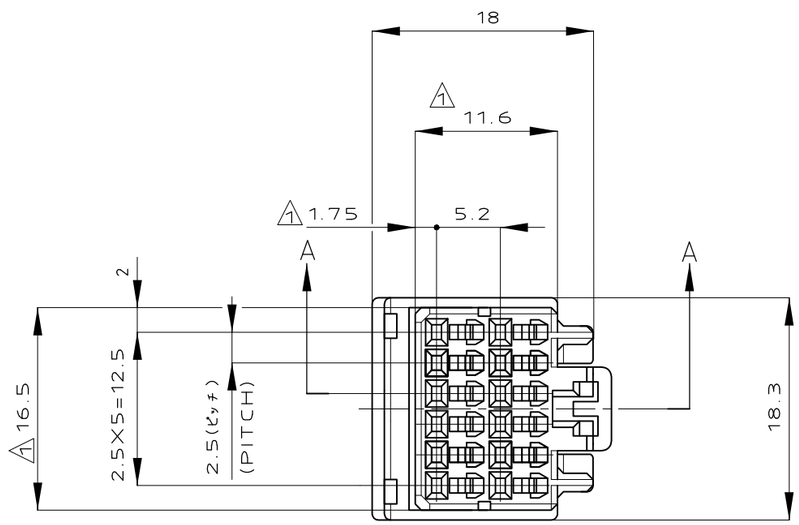

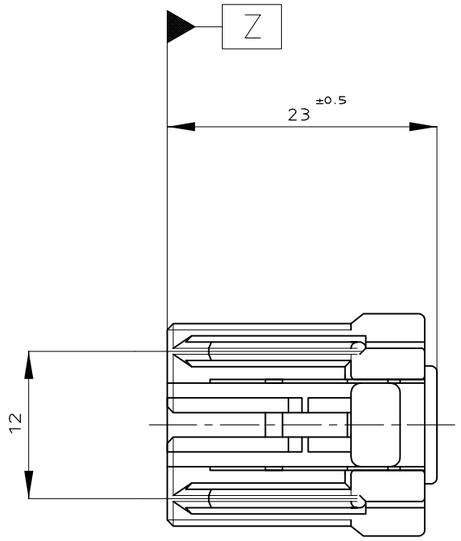

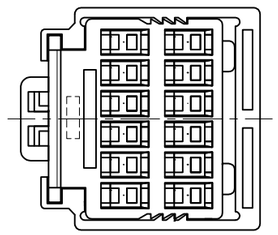

1 MUST BE KEPT BETWEEN Z AND 2mm
2 THE MATING CAP HSG. PART NUMBER;175974,175976
3 APPLED CONTACT PART NUMBER;173681
4 APPLICABLE PRODUCT SPEC NO.;108-5281
5 THIS PLUG HOUSING HAVE TWO KINDS OF LANCE TYPE.

1 Z 面より2mmの範囲で測定。
2 かん合相手ハウジング型番；175974,175976
3 内装するリセプタクルコンタクト型番；173681
4 適用製品規格番号；108-5281
5 本プラグハウジングは2タイプのランス形状がある

5

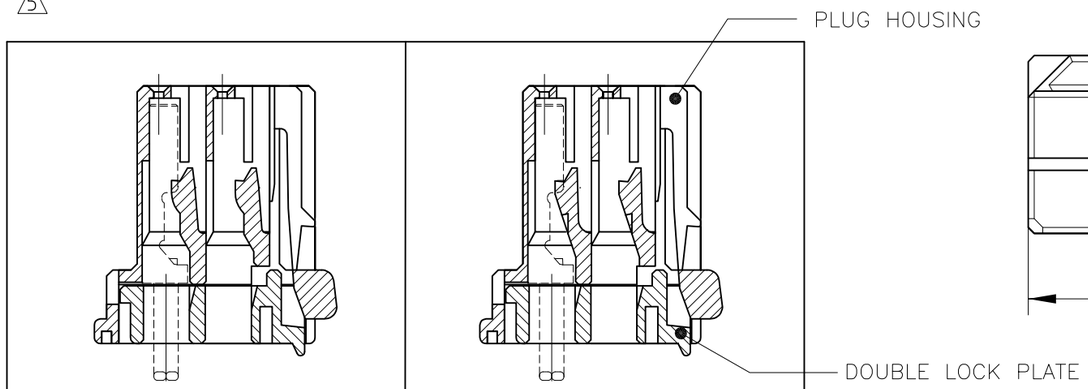

175965-1 175965-2	175965-3
PART NUMBER	

A - A

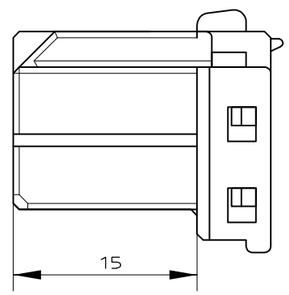

COLOR	PART NUMBER
BLACK	175965-3
BLACK	175965-2
WHITE	175965-1

THIS DRAWING IS A CONTROLLED DOCUMENT.

TOLERANCE UNLESS OTHERWISE SPECIFIED: 一般公差
0 < x ≦ 10 : ±0.2
10 < x ≦ 30 : ±0.25
30 < x ≦ 100 : ±0.3
ANGLE ; ±3°
角度

DIMENSIONS: 単位： 粍 mm

TOLERANCES UNLESS OTHERWISE SPECIFIED: 一般公差
0 PLC ±—
1 PLC ±—
2 PLC ±—
3 PLC ±—
4 PLC ±—
ANGLES ±—

MATERIAL 材料: PBT

FINISH 仕上: —

DWN K. SUZUKI 24OCT89
CHK Y. MATSUSAKA 19DEC89
APVD M. NOGUCHI 26DEC89
PRODUCT SPEC 製品規格 108-5281
APPLICATION SPEC 取付適用規格 —
WEIGHT 3.2 g

TE Connectivity

NAME 名称 040 SERIES MULTI-LOCK I/O CONNECTOR MK-II 12POSITION PLUG HOUSING ASSEMBLY

SIZE	CAGE CODE	DRAWING NO 番号	RESTRICTED TO
A3	00779	C-175965	—

CUSTOMER DRAWING | SCALE 尺度 2:1 | SHEET 1 OF 1 | REV B3