MICRO SWITCH
a Honeywell Division
FED. MFG. CODE 91929

SWITCH - TOGGLE (MAGNETIC HOLD-IN)

CATALOG LISTING
27ET129-T

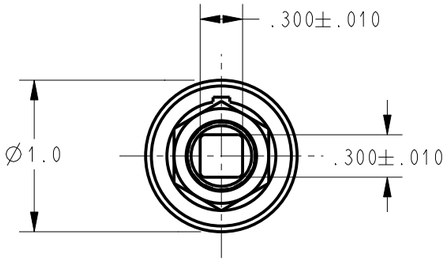

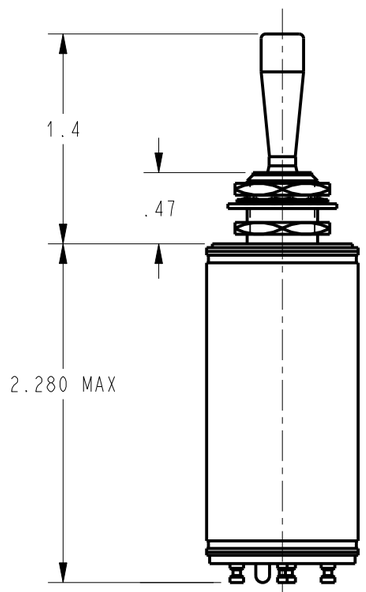

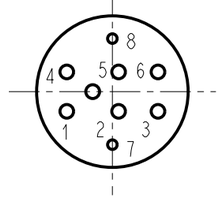

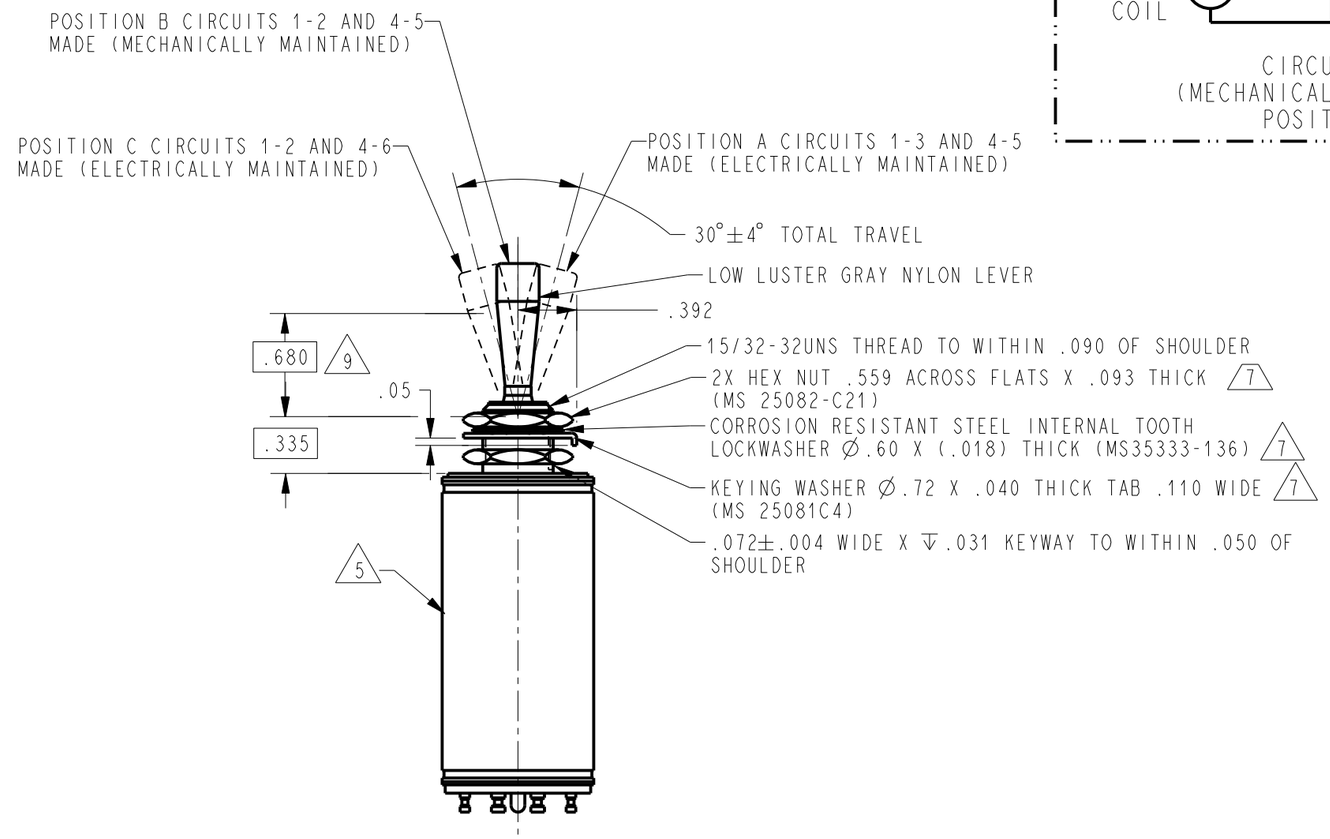

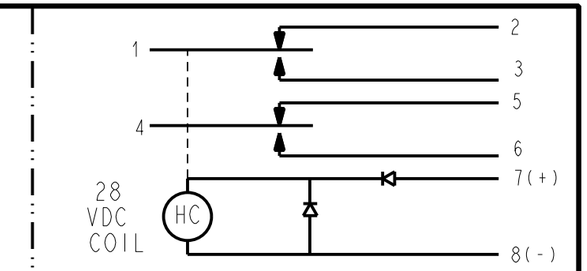

CIRCUIT DIAGRAM
(MECHANICALLY MAINTAINED
POSITION B)

NOTES
1 - EXPOSED PARTS ARE OF CORROSION RESISTANT MATERIAL OR ARE SUITABLY PROTECTED TO PREVENT CORROSION, ENCLOSURE FINISHED WITH BLUE EPOXY BASED ENAMEL COLOR NO. 25184 PER FEDERAL STANDARD 595
2 - SWITCH SEALED PER MIL-S-5594
3 HOLD IN VOLTAGE: THE MINIMUM SPECIFIED VOLTAGE AT WHICH THE LEVER WILL REMAIN ACTUATED. HOLD IN MAY OCCUR AT A LOWER VALUE. DROP OUT VOLTAGE: THE VOLTAGE RANGE IN WHICH THE LEVER WILL BE RELEASED
4 - CIRCUITS CAN BE TRANSFERRED MANUALLY. ENERGIZING THE COIL WILL NOT CAUSE TRANSFER OF CIRCUITS
5 CIRCUIT IDENTIFICATION IS SHOWN ON SWITCH
6 WEIGHT OF SWITCH ONLY IS 4.0 OZ MAX
7 HARDWARE MAY BE FURNISHED UNASSEMBLED PER MIL-S-5594
8 - THE DIODES ARE JANTXV TYPE AND LIMIT THE EMI: SPIKES (TRANSIENTS OF DURATION LESS THAN 500 MICRO SECONDS) GENERATED BY THE SWITCH COIL SHALL NOT EXCEED +42 VOLTS OR -14 VOLTS ABSOLUTE
9 FORCE TO BE APPLIED AT THIS POINT IN A DIRECTION PERPENDICULAR TO THE LEVER LONGITUDINAL AXIS

THIS DRAWING COVERS A PROPRIETARY ITEM AND IS THE PROPERTY OF MICRO SWITCH. A DIVISION OF HONEYWELL. THIS DRAWING IS NOT TO BE COPIED OR USED WITHOUT THE APPROVAL OF MICRO SWITCH

THIRD ANGLE PROJECTION

SCALE FULL

DO NOT SCALE PRINT

UNLESS OTHERWISE SPECIFIED TOLERANCES ARE

ONE PLACE	(.0)	±.030
TWO PLACE	(.00)	±.015
THREE PLACE	(.000)	±.005
ANGLES		±

WEIGHT 6

CHARACTERISTICS 3

SOLENOID RATING AT 20°C

STEADY STATE LIMITS	20-29 VDC
HOLD IN	15 VDC
DROP OUT	0-15 VDC
COIL RESISTANCE	220 OHM MIN
OPERATING FORCE 9	7 LBS MAX -1.25 LB MIN
OVERRIDE FORCE @ 30 VDC 9	10 LBS MAX -2.5 LB MIN

ELECTRICAL DATA

CONTACT ARRANGEMENT
2X S P D T

RATINGS IN AMPHERES

VOLTAGE	SEA LEVEL INRUSH	SEA LEVEL RES	SEA LEVEL IND	SEA LEVEL MOTOR	65,000 FT INRUSH	65,000 FT RES	65,000 FT IND	65,000 FT MOTOR
28 VOLTS DC		7	2			5	1.5	

ANSI Y14.5M-1982 APPLIES

CATALOG LISTING	27ET129-T
PAGE	1 OF 1
ISSUE	5
REVISIONS	A 0000244 C S L 8 MAY 03
REPLACES	-
RELEASE NO.	PR-14572
CHECK	
CHECK	
8 MAY 03	
SAV	
CHECK	
8 MAY 03	
DRAWN	CSL
PTC/CAD	2D