THIS DRAWING IS UNPUBLISHED. RELEASED FOR PUBLICATION ,19 .
DIFFUSION RESTREINTE AMP DIFFUSION PUBLIQUE
© COPYRIGHT 19 BY AMP INCORPORATED. ALL RIGHTS RESERVED. TOUS DROITS RESERVES.

LOC	DIST
F	7

REVISIONS

P	LTR REV	DESCRIPTION MODIFICATIONS	DATE	DWN DESS.	APVD APP.
	A	COTE 3 ETAIT 2.65	30-JAN-96	SI	-
	B	PERCAGE Ø3	02-MAY-96	SI	-
	C	COTE CAPABILITE	09-JUL-96	SI	-
	D	CHANG TOLER 8.6	26-JUL-96	SI	-
	E	CONFO. PIECE MOULEE	28-AUG-96	SI	-
	F	1.5-0/+0.1 ETAIT 1.5±0.3	28-OCT-96	SI	-
	G	1.5-0/+0.2 ETAIT 1.5-0/+0.1	18-NOV-96	SI	-
	H	RAJOUT NERVURE 0.8±0.2	17-DEC-96	SI	-
	J	MODIF. CREMAILLERE	28-MAY-97	SI	-
	K	MODIFICATION FENETRE	22-FEB-99	JLQ	-

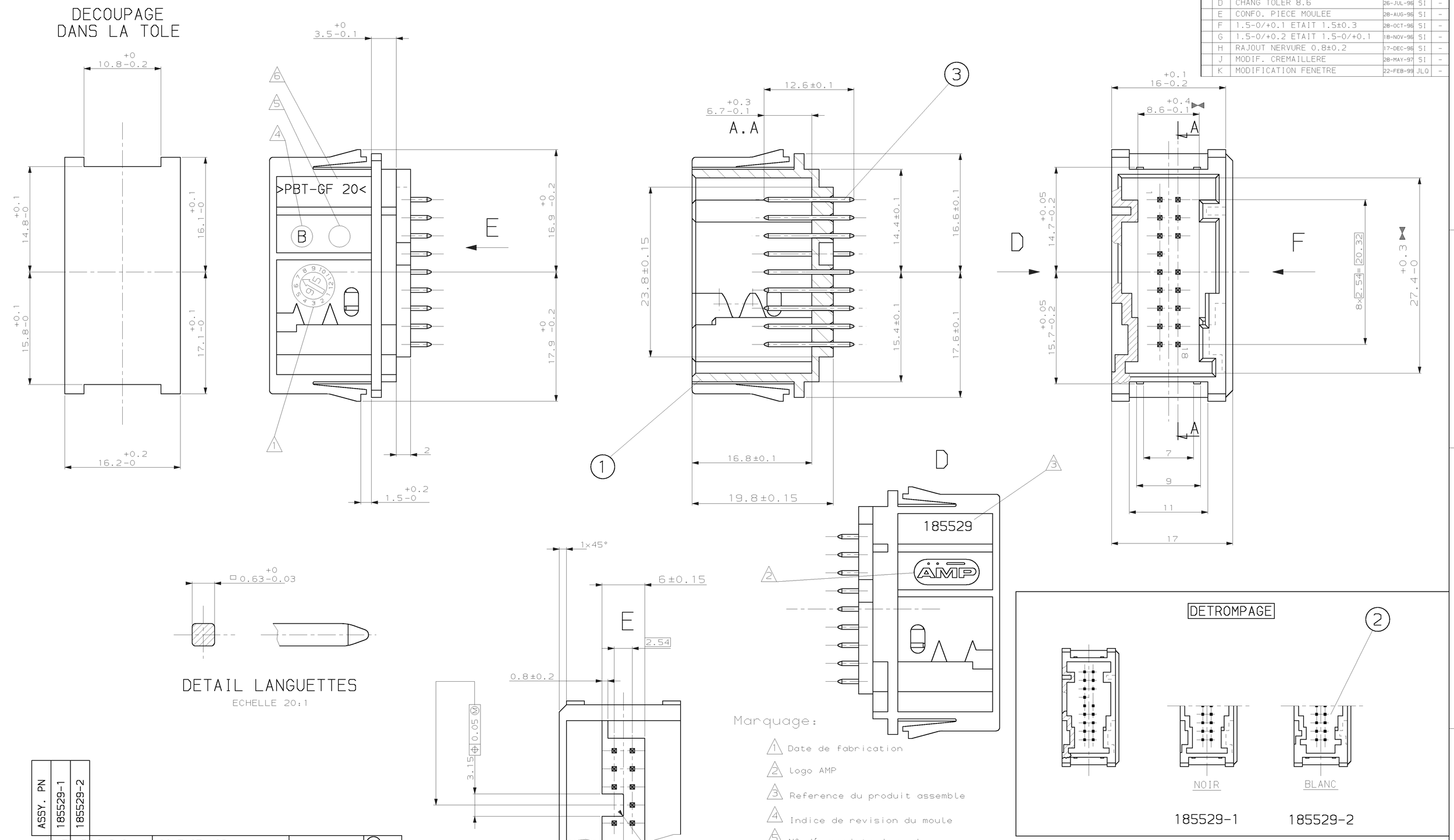

ASSY. PN					
	185529-1	185529-2			
17	17	CuSn6	CONTACT MQS	-	3
-	1	PBT GF20	EMBASE CODAGE 2	BLANC	2
1	-	PBT GF20	EMBASE CODAGE 1	NOIR	1
QTTE.		MATIERE	DESIGNATION	COULEUR	REP.

THIS DRAWING IS A CONTROLLED DOCUMENT FOR AMP INCORPORATED. IT IS SUBJECT TO CHANGE AND THE CONTROLLING ENGINEERING ORGANIZATION SHOULD BE CONTACTED FOR THE LATEST REVISION. CE DESSIN EST UN DOCUMENT CONTROLE POUR AMP INCORPORATED. IL EST SUSCEPTIBLE D'ETRE REVISE. CONTACTER LE SERVICE TECHNIQUE D'AMP DE FRANCE POUR OBTENIR LA DERNIERE REVISION.

DIMENSIONS: mm

MATERIAL MATIERE -

TOLERANCES UNLESS OTHERWISE SPECIFIED, TOLERANCES NON SPECIFIEES (SUIV NB DE DECIMALES):
0: PLC/DDC ±
1: PLC/DEC ±0.3
2: PLC/DEC ±
3: PLC/DEC ±
4: PLC/DEC ±
ANGLES ±5°
FINISH FINITION -

DWN/DESSINE S. IVANOVIC 12-OCT-95
CHK/VERIFIE J.LAQUERBE 25-MAR-99
APVD/APPROUVE D.MUYL 25-MAR-99
PRODUCT SPEC SPEC. PRODUIT -
APPLICATION SPEC SPEC. APPLICATION -
WEIGHT MASSE APPROX. -

AMP — AMP DE FRANCE 95301 PONTOISE

NAME TITRE: EMBASE 18 VOIES MQS

SIZE FORMAT A1 | CAGE CODE 00779 | DRAWING NO No PLAN C-185529

CUSTOMER DRAWING/PLAN CLIENT UNIQUEMENT POUR REFERENCE | SCALE ECHELLE 4:1 | SHEET FEUILLE 1 OF 2 | REV K

AMP-480S REV 10/93

23-FEB-99 08:10:16 jl3237 /home/dept1302/jl3237/edmmod

THIS DRAWING IS UNPUBLISHED. RELEASED FOR PUBLICATION ,19 .
DIFFUSION RESERVEE AMP
© COPYRIGHT 19 BY AMP INCORPORATED. ALL RIGHTS RESERVED. TOUS DROITS RESERVES.

LOC	DIST
F	7

REVISIONS

P	LTR REV	DESCRIPTION MODIFICATIONS	DATE	DWN DESS.	APVD APP.
	–	–	–	–	–

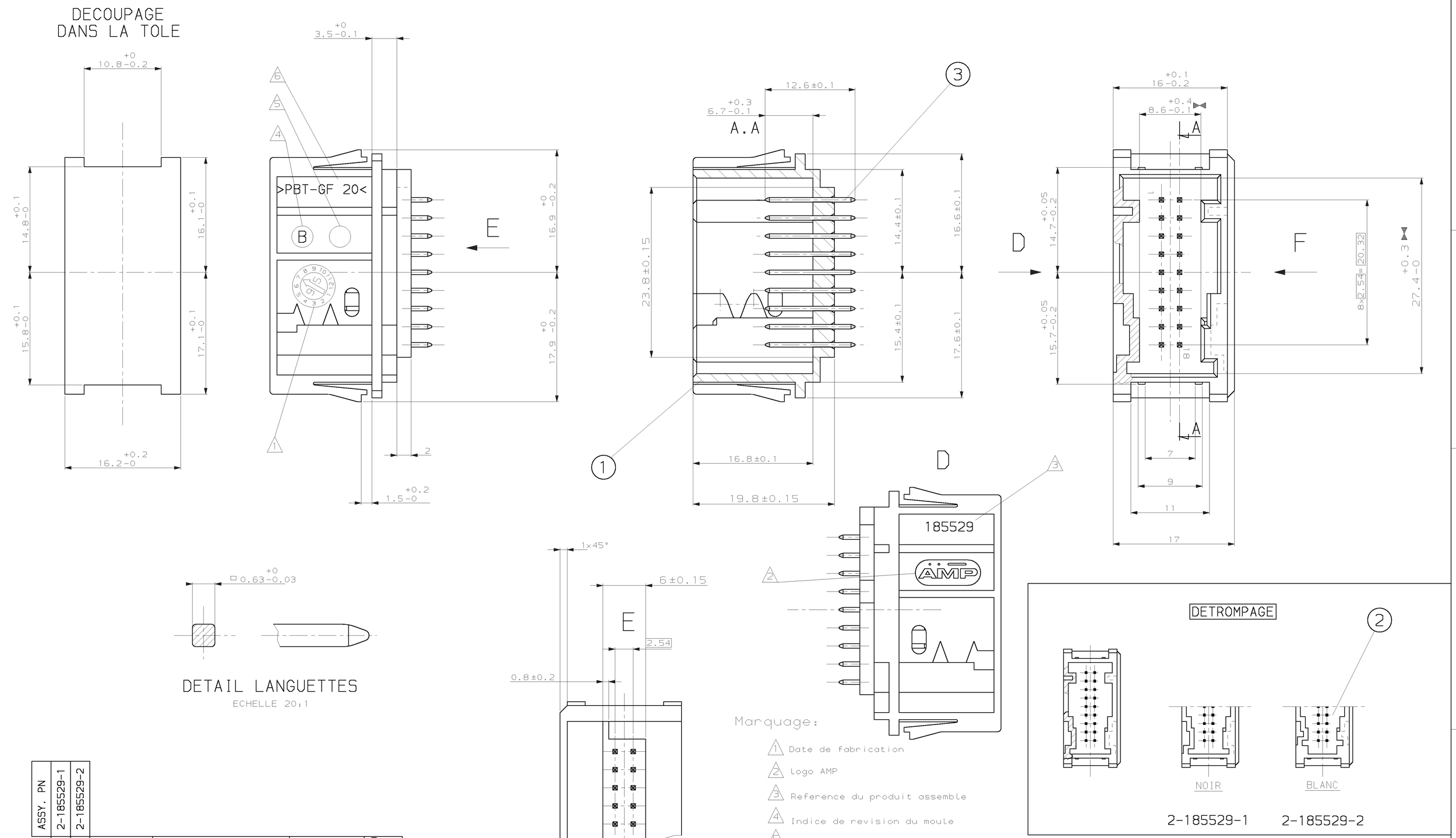

Marquage:

1. Date de fabrication
2. Logo AMP
3. Reference du produit assemble
4. Indice de revision du moule
5. N° d'empreinte de moule
6. Matiere: PBT 20GF

Cote capabilite

7 COMPATIBLE UNIQUEMENT AVEC CONNECTEURS FRANCAIS REF:
- 185307-X
- 185315-X

ASSY. PN	2-185529-1	2-185529-2				
	18	18	CuSn6	CONTACT MQS	–	3
	–	1	PBT GF20	EMBASE CODAGE 2	BLANC	2
	1	–	PBT GF20	EMBASE CODAGE 1	NOIR	1
	QTTE.		MATIERE	DESIGNATION	COULEUR	REP.

THIS DRAWING IS A CONTROLLED DOCUMENT.
CE PLAN EST UN DOCUMENT CONTROLE.

DIMENSIONS: mm

TOLERANCES UNLESS OTHERWISE SPECIFIED. TOLERANCES NON SPECIFIEES (SUIV. NB DE DECIMALES): 0-PLC/DEC: ± 1-PLC/DEC: ± 2-PLC/DEC: ± 3-PLC/DEC: ± 4-PLC/DEC: ± ANGLES: ±

MATERIAL MATIERE – FINISH FINITION –

DWN/DESSINE Sladjan IVANOVIC 30-MAY-97
CHK/VERIFIE J.LAQUERBE 25-MAR-99
APVD/APPROUVE D.MUYL 25-MAR-99
PRODUCT SPEC SPEC. PRODUIT –
APPLICATION SPEC SPEC. APPLICATION –
WEIGHT MASSE APPROX. –

AMP — AMP DE FRANCE 95301 PONTOISE

NAME TITRE: EMBASE 18 VOIES MQS

SIZE FORMAT A1 | CAGE CODE 00779 | DRAWING NO TITRE C-185529 | RESTRICTED TO –

CUSTOMER DRAWING/PLAN CLIENT — UNIQUEMENT POUR REFERANCE | SCALE ECHELLE 4:1 | SHEET FEUILLE 2 OF 2 | REV K

AMP 4805 REV 27JUN96