Alle Rechte vorbehalten/ *All rights reserved*

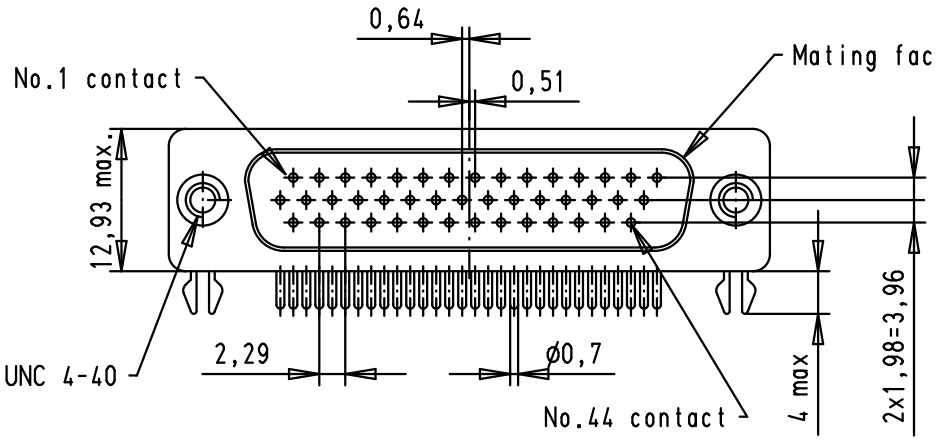

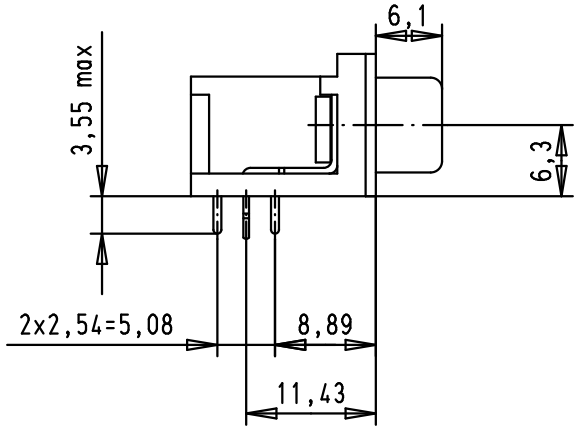

Printed board layout, component side
PCB thickness 1,6mm

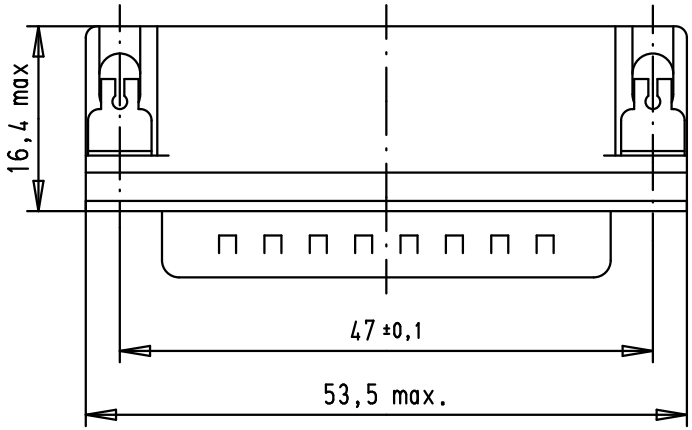

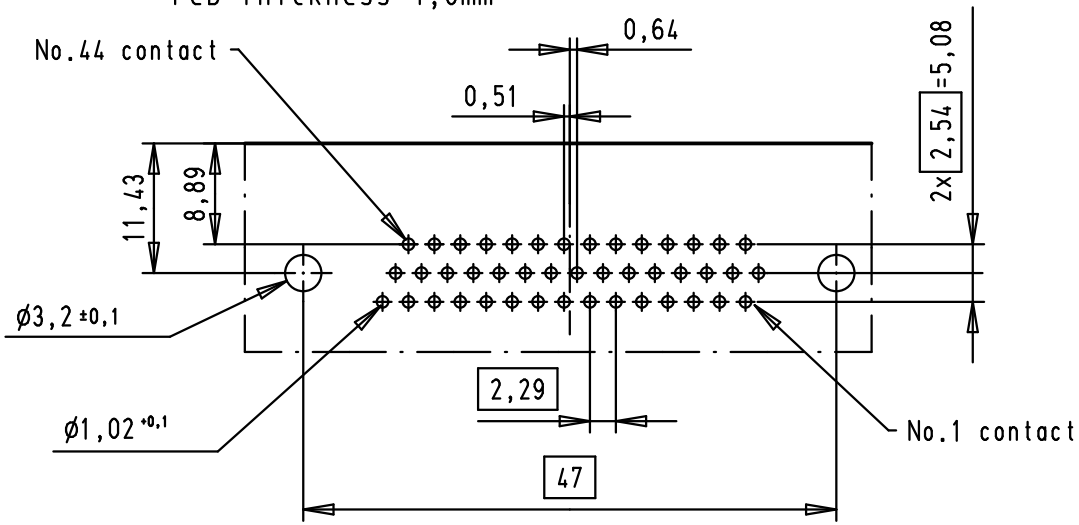

							Dat.	Name	All Dim. in mm Orig. Size DIN A 4	Dsub, 44 poles, male, angled solder pins board lock	Maßstab/ *Scale*
						Detail.	16-SEP-02	CV			1.5:1
			36181	11/10/10	*BH*	Insp.					
			EC02035	08/07/10	*SC*	Stand.					
09563625812	S4		31352	16-OCT-02	*S.H.*	HARTING EURL F-95972 Paris				TB 09 56 362 x812	Blatt/*Page* 1/1
09563627812	PL3		31064	16-SEP-02	CV						
Part number	Performance level		Mod.	Dat.	Name					Sub.	