LOOSE PIECE		TAPE MOUNTED		SPECIFICATIONS						
MATERIAL NUMBER	ALTERNATE NUMBER	MATERIAL NUMBER	ALTERNATE NUMBER	STUD SIZE	"S" ±.005/(0.13)	"W" ±.010/(0.25)	"C" MIN.	"L" MAX.	"ID" MIN.	STOCK THICKNESS
190440063	A-120-02	190440001	A-120-02T	2	.094/(2.39)	.225/(5.72)	.157/(3.99)	.563/(14.30)	.062/(1.57)	.028/(.71)
190440064	A-120-04	190440065	A-120-04T	4	.119/(3.02)	.225/(5.72)	.157/(3.99)	.563/(14.30)	.062/(1.57)	.028/(.71)
190440066	A-120-06	190440067	A-120-06T	6	.146/(3.71)	.225/(5.72)	.157/(3.99)	.563/(14.30)	.062/(1.57)	.028/(.71)
190440068	A-121-06	190440003	A-121-06T	6	.146/(3.71)	.312/(7.92)	.270/(6.86)	.720/(18.29)	.062/(1.57)	.028/(.71)
190440069	A-121-08	190440071	A-121-08T	8	.173/(4.39)	.312/(7.92)	.270/(6.86)	.720/(18.29)	.062/(1.57)	.028/(.71)
190440072	A-121-10	190440073	A-121-10T	10	.198/(5.03)	.312/(7.92)	.270/(6.86)	.720/(18.29)	.062/(1.57)	.028/(.71)
190440074	A-122-10	190440004	A-122-10T	10	.198/(5.03)	.467/(11.86)	.386/(9.80)	.914/(23.22)	.062/(1.57)	.028/(.71)
190440075	A-122-14	190440076	A-122-14T	1/4	.256/(6.50)	.467/(11.86)	.386/(9.80)	.914/(23.22)	.062/(1.57)	.028/(.71)
190440077	A-122-56	190440005	A-122-56T	5/16	.328/(8.33)	.467/(11.86)	.386/(9.80)	.914/(23.22)	.062/(1.57)	.028/(.71)
190440078	A-126-10	190440006	A-126-10T	10	.198/(5.03)	.534/(13.56)	.552/(14.02)	1.113/(28.27)	.054/(1.37)	.031/(.79)
190440079	A-126-14	190440080	A-126-14T	1/4	.256/(6.50)	.534/(13.56)	.552/(14.02)	1.113/(28.27)	.054/(1.37)	.031/(.79)
190440082	A-126-56	190440008	A-126-56T	5/16	.328/(8.33)	.534/(13.56)	.552/(14.02)	1.113/(28.27)	.054/(1.37)	.031/(.79)
190440081	A-126-38	190440007	A-126-38T	3/8	.390/(9.91)	.534/(13.56)	.552/(14.02)	1.113/(28.27)	.054/(1.37)	.031/(.79)
190440083	A-132-04	190440009	A-132-04T	4	.119/(3.02)	.256/(6.45)	.240/(6.10)	.661/(16.69)	.062/(1.57)	.028/(.71)
190440084	A-132-06	190440085	A-132-06T	6	.146/(3.71)	.256/(6.45)	.240/(6.10)	.661/(16.69)	.062/(1.57)	.028/(.71)
190440086	A-132-08	190440087	A-132-08T	8	.146/(3.71)	.256/(6.45)	.240/(6.10)	.661/(16.69)	.062/(1.57)	.028/(.71)

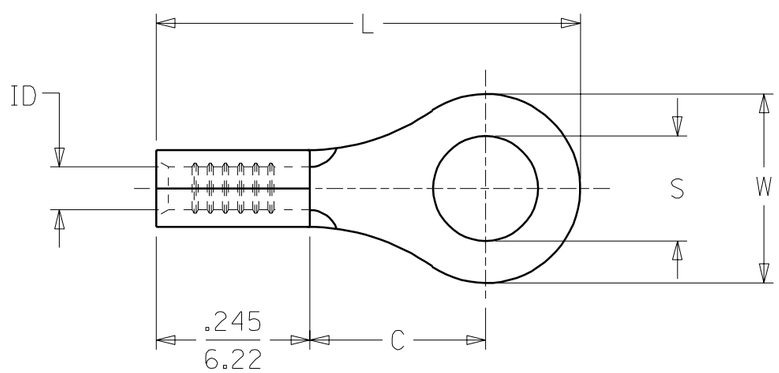

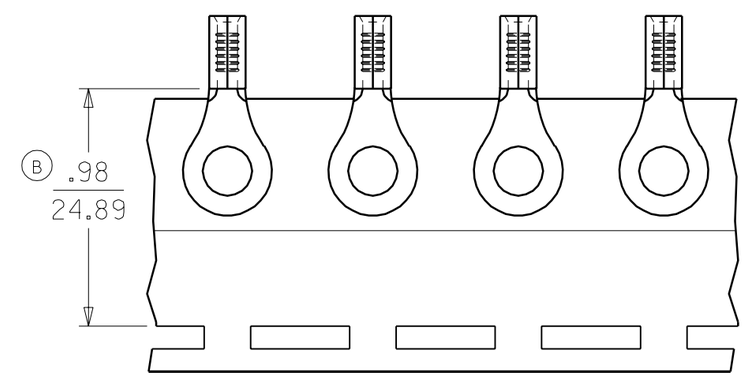

PARTS ON TAPE

CUSTOMER DRAWING

LTR.	REVISIONS
C	RELEASE ERROR ETC2001-0234 00/12/01 EDB
B	.98 WAS.78 ETC2001-0209 2000/10/30 EDB
A	RELEASE NEW DWG. ETC2000-0068 1999/10/27 HEB

NOTES:
1. MATERIAL: COPPER.
2. PLATING: ELECTRO-TIN.
3. ALL DIMENSIONS IN INCHES/(MM).

DIMENSIONS SHOWN (METRIC) INCH

UNLESS OTHERWISE SPECIFIED TOLERANCES: ANGULAR ± 1/2°

	INCH	METRIC
3 PLACE	± .005	± ---
2 PLACE	± .01	± 0.13
1 PLACE	± ---	± 0.25

DRAFT WHERE APPLICABLE MUST REMAIN WITHIN DIMENSIONS

DRWG. BY HEB | CHK'D. BY RWD
APP'D. BY RWD | SCALE 4: 1

REVISE ONLY ON CAD SYSTEM

TITLE
RING TONGUE TERMINAL
22-18 AWG
KRIMPTITE, 100-SERIES

molex ETC INC.
PINELLAS PARK, FLA. 33781 U.S.A.

SHEET NO. 1 OF 1 | DATE 99/10/27

PART NO. SEE TABLE | DRWG. NO. SD-19044-001

FILE NAME SD19044001 DGN

THIS DRAWING CONTAINS INFORMATION THAT IS PROPRIETARY TO MOLEX-ETC INC. AND SHOULD NOT BE USED WITHOUT WRITTEN PERMISSION.

DIV. ET | SIZE B