# Aluminum electrolytic capacitors

For automotive applications,
axial-lead and soldering star,
140 °C / 2000 h

**Series/Type:** **B41692/B41792**
Date: July 2005

© EPCOS AG 2005. Reproduction, publication and dissemination of this data sheet, enclosures hereto and the information contained therein without EPCOS' prior express consent is prohibited.

# Axial-lead and soldering star Aluminum electrolytic capacitors

## Introduction

Axial-lead (B4169x/B43693) and soldering star (B4179x/B43793) capacitors can withstand temperatures up to 150 °C and vibrations up to 20 *g*. They are specified for an extended useful life, offer outstanding electrical performance at high reliability and can withstand temperature changes specified according to the typical automotive requirements.
The innovative “automotive grade series” combines high ripple current load and very low ESR with a compact design.

The winding element is fixed by the corrugation in the middle of the can. Tensile strain applied to the tabs by vibration stress is eliminated by corrugated tabs. The lead wire (Ø 1 mm) withstands high mechanical stress. Moreover, low ESR and an extended useful life contribute to their high reliability and performance. These new series from EPCOS have been upgraded to operating temperatures of 150 °C and are designed for typical automotive customers’ specifications. Soldering star aluminum electrolytic capacitors (with a star connector terminal) have a comparable internal winding construction to the axial-lead types. The center contact acts as the positive pole and the capacitor case as the negative pole. The star connector terminal is welded to the case and so also has negative polarity. A simple mounting method (pick and place) is an added advantage of this design.

**Axial-lead capacitors**

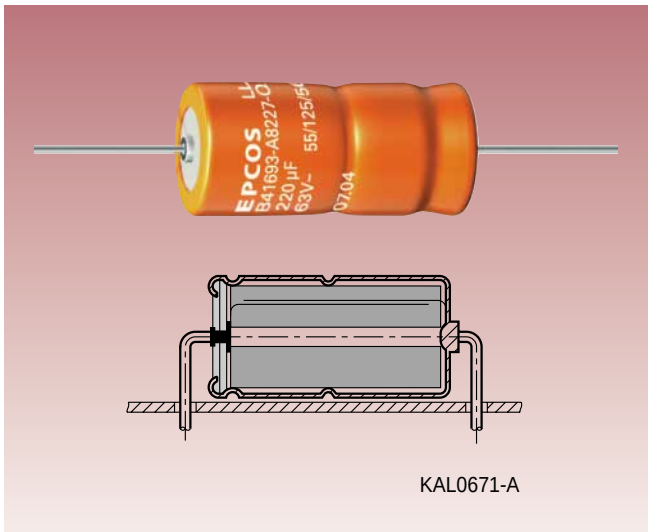


**Soldering star capacitors**

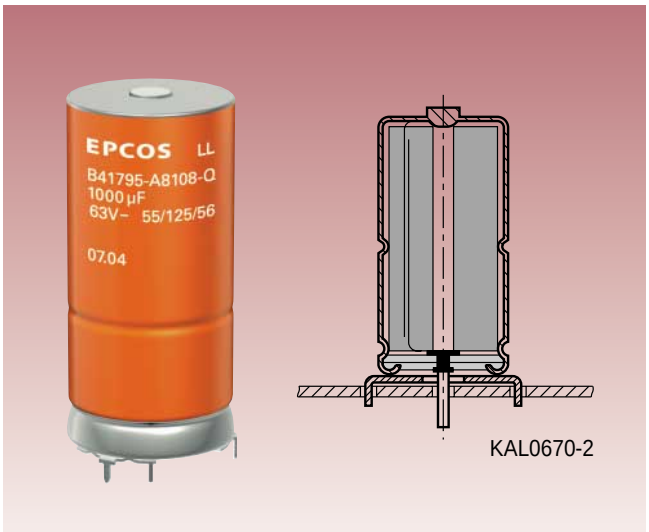


1 mm wires and corrugation for increased vibration stability, enhanced further by soldering star design.

# Data sheet
# B41692/B41792

## Specifications and characteristics in brief

| | | | | | | | |
|---|---|---|---|---|---|---|---|
| Rated voltage $V_R$ | 25 … 63 VDC | | | | | | |
| Surge voltage $V_{surge}$ | $1.15 \cdot V_R$ | | | | | | |
| Rated capacitance $C_R$ | 220 … 6000 µF | | | | | | |
| Capacitance tolerance | –10/+30% ≙ Q | | | | | | |
| Leakage current $I_{leak}$ (5 min, 20 °C) | $I_{leak} \leq 0.006 \cdot \mu A \left(\frac{C_R}{\mu F} \cdot \frac{V_R}{V}\right) + 4\ \mu A$ | | | | | | |
| Self-inductance ESL[1)] | Diameter d | | 12 mm | 14 mm | 16 mm | 18 mm | 21 mm |
| | Length | Terminal | approx. ESL (nH) | | | | |
| | 25 mm | axial / soldering star | – / – | 22 / 6 | 26 / 7 | – / – | – / – |
| | 30 mm | axial / soldering star | 21 / 6 | 24 / 7 | 29 / 8 | 34 / 10 | – / – |
| | 39 mm | axial / soldering star | – / – | – / – | 33 / 9 | 38 / 11 | 45 / – |
| | 49 mm | axial | – / – | – / – | – / – | – / – | 50 / – |
| Useful life<br>150 °C; $V_{op}$; $0.5 \cdot I\sim_R$<br>140 °C; $V_R$; $0.6 \cdot I\sim_R$ *)<br>125 °C; $V_R$; $I\sim_R$<br>85 °C; $V_R$; $I\sim_{max}$<br>40 °C; $V_R$; $2 \cdot I\sim_R$<br>*) $V_{op}$: see useful life graph, page 26 | <br>> 2 000 h<br>> 2 000 h<br>> 5 000 h<br>> 15 000 h<br>> 500 000 h | Requirements:<br>ΔC/C ≤ ±30% of initial value<br>ESR ≤ 3 times initial specified limit<br>$I_{leak}$ ≤ initial specified limit | | | | | |
| Voltage endurance test<br>125 °C; $V_R$ | 2 000 h | Post test requirements:<br>ΔC/C ≤ ±10% of initial value<br>ESR ≤ 1.3 times initial specified limit<br>$I_{leak}$ ≤ initial specified limit | | | | | |
| Vibration resistance | To IEC 60068-2-6, test Fc:<br>displacement amplitude 1.5 mm, at 10 Hz … 2 kHz,<br>acceleration max. 20 *g*, duration 3 x 2 h | | | | | | |
| IEC climatic category | To IEC 60068-1:<br>55/125/56 (– 55 °C/+125 °C/56 days damp heat test) | | | | | | |
| Detail specification<br>Sectional specification | Similar to CECC 30301-802<br>IEC 60384–4 | | | | | | |

### Features

- Long useful life, 2000 h at up to 140 °C
- Up to 150 °C operating temperature at reduced voltage applied
- Very high ripple current capability
- Miniaturized design
- High vibration resistance
- Shelf life of the capacitor up to 15 years at storage temperatures up to 40 °C. To ensure solderability, the capacitors should be built into the application within one year of delivery. After a total of two years' storage, the operating voltage must be applied for one hour to ensure the specified leakage current.

[1)] If optimum circuit design is used, the values are lower by 30%.

# Data sheet B41692/B41792

## Axial-lead capacitors

### Dimensional drawing

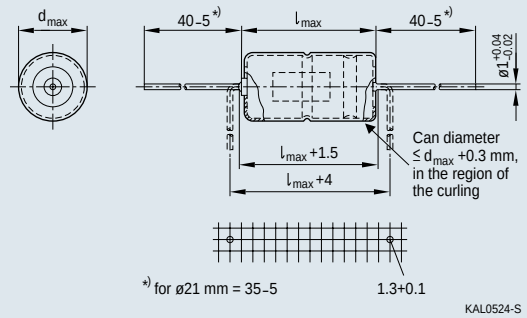


### Dimensions, weights and packing units

| d x l (mm) | $d_{max}$ x $l_{max}$ (mm) | Approx. weight (g) | Packing units (pieces) Pallet | Reel |
|---|---|---|---|---|
| 12 x 30 | 12.5 x 30.5 | 5.1 | 288 | 450 |
| 14 x 25 | 14.5 x 25.5 | 5.7 | 200 | 350 |
| 14 x 30 | 14.5 x 30.5 | 6.8 | 200 | 350 |
| 16 x 30 | 16.5 x 30.5 | 8.9 | 180 | 250 |
| 16 x 39 | 16.5 x 40 | 11.7 | 180 | – |
| 18 x 30 | 18.5 x 30.5 | 11.1 | 160 | – |
| 18 x 39 | 18.5 x 40 | 14.7 | 160 | – |
| 21 x 39 | 21.5 x 40 | 20 | 140 | – |
| 21 x 49 | 21.5 x 50 | 25 | 110 | – |

## Soldering star capacitors

### Dimensional drawing

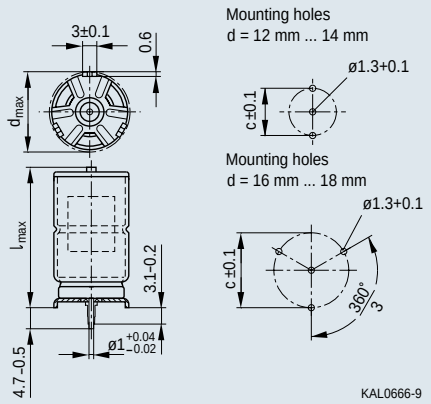


### Dimensions, weights and packing units

| d x l (mm) | $d_{max}$ x $l_{max}$ (mm) | c ± 0.1 (mm) | Approx. weight (g) | Packing units (pieces) |
|---|---|---|---|---|
| 12 x 30 | 13.5 x 32 | 12.5 | 5.4 | 480 |
| 14 x 25 | 15.5 x 27 | 14.5 | 6.1 | 480 |
| 14 x 30 | 15.5 x 32 | 14.5 | 7.2 | 480 |
| 16 x 30 | 17.5 x 32 | 16.5 | 9.4 | 300 |
| 16 x 39 | 17.5 x 41.5 | 16.5 | 12.2 | 200 |
| 18 x 30 | 19.5 x 32 | 18.5 | 11.8 | 300 |
| 18 x 39 | 19.5 x 41.5 | 18.5 | 15.4 | 200 |

The PC board hole arrangement specified above is based on circular arcs.
If, however, the mounting holes have to be matched to a standard drilling raster, a spacing of 1.27 mm (1/20″) has proved to be sufficiently accurate if the following arrangements are used:

d = 12 mm

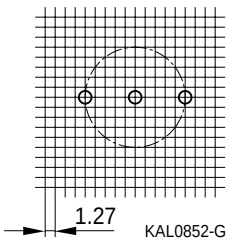


d = 14 mm

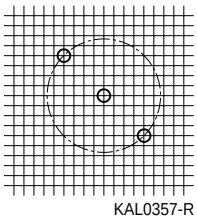


d = 16 mm

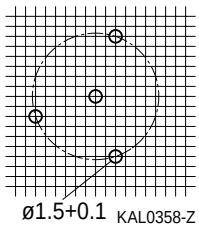


d = 18 mm

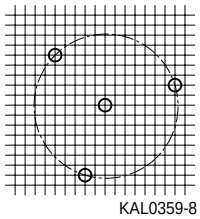

# Data sheet
# B41692/B41792

## Case dimensions and ordering codes

| $V_R$ VDC | $C_R$ µF | Case dimensions d x l mm | Ordering code Axial pallet package | Axial reel | Soldering star |
|---|---|---|---|---|---|
| 25 | 680 | 12 x 30 | B41692A5687Q007 | B41692A5687Q009 | B41792A5687Q000 |
| | 1000 | 14 x 25 | B41692A5108Q007 | B41692A5108Q009 | B41792A5108Q000 |
| | 1500 | 14 x 30 | B41692A5158Q007 | B41692A5158Q009 | B41792A5158Q000 |
| | 2200 | 16 x 39 | B41692A5228Q007 | – | B41792A5228Q000 |
| | 2200[1)] | 18 x 30 | B41692B5228Q007 | – | B41792B5228Q000 |
| | 3300[1)] | 18 x 39 | B41692A5338Q007 | – | B41792A5338Q000 |
| | 4700[1)] | 21 x 39 | B41692A5478Q007 | – | – |
| | 6000[1)] | 21 x 49 | B41692A5608Q007 | – | – |
| 40 | 470 | 12 x 30 | B41692A7477Q007 | B41692A7477Q009 | B41792A7477Q000 |
| | 680 | 14 x 30 | B41692A7687Q007 | B41692A7687Q009 | B41792A7687Q000 |
| | 1000 | 16 x 30 | B41692A7108Q007 | B41692A7108Q009 | B41792A7108Q000 |
| | 1500 | 16 x 39 | B41692A7158Q007 | – | B41792A7158Q000 |
| | 1500[1)] | 18 x 30 | B41692B7158Q007 | – | B41792B7158Q000 |
| | 2200[1)] | 18 x 39 | B41692A7228Q007 | – | B41792A7228Q000 |
| | 3000[1)] | 21 x 39 | B41692A7308Q007 | – | – |
| | 4000[1)] | 21 x 49 | B41692A7408Q007 | – | – |
| 63 | 220 | 12 x 30 | B41692A8227Q007 | B41692A8227Q009 | B41792A8227Q000 |
| | 330 | 14 x 30 | B41692A8337Q007 | B41692A8337Q009 | B41792A8337Q000 |
| | 470 | 16 x 30 | B41692A8477Q007 | B41692A8477Q009 | B41792A8477Q000 |
| | 680 | 16 x 39 | B41692A8687Q007 | – | B41792A8687Q000 |
| | 680[1)] | 18 x 30 | B41692B8687Q007 | – | B41792B8687Q000 |
| | 1000[1)] | 18 x 39 | B41692A8108Q007 | – | B41792A8108Q000 |
| | 1500[1)] | 21 x 49 | B41692A8158Q007 | – | – |
| | 2200[1)] | 21 x 49 | B41692A8228Q007 | – | – |

## Technical data

| $V_R$ VDC | $C_R$ 100 Hz 20 °C µF | $ESR_{typ}$ 100 Hz 20 °C mΩ | $ESR_{max}$ 100 Hz 20 °C mΩ | $ESR_{max}$ 100 Hz –40 °C mΩ | $ESR_{max}$ 10 kHz 20 °C mΩ | $Z_{max}$ 100 kHz 20 °C mΩ | $I_{\sim max}$ 10 kHz 40 °C A | $I_{\sim max}$ 10 kHz 85 °C A | $I_{\sim max}$ 10 kHz 105 °C A | $I_{\sim max}$ 10 kHz 125 °C A | $I_{\sim R}$ 10 kHz 125 °C A | $I_{\sim max}$ 10 kHz 140 °C A |
|---|---|---|---|---|---|---|---|---|---|---|---|---|
| 25 | 680 | 150 | 250 | 1700 | 175 | 163 | 4.6 | 4.0 | 3.4 | 2.5 | 1.7 | 1.1 |
| | 1000 | 105 | 175 | 1200 | 125 | 117 | 5.1 | 4.4 | 3.8 | 2.8 | 1.9 | 1.3 |
| | 1500 | 72 | 120 | 800 | 85 | 80 | 6.6 | 5.8 | 4.9 | 3.7 | 2.5 | 1.6 |
| | 2200 | 50 | 82 | 550 | 59 | 56 | 9.6 | 8.3 | 7.1 | 5.3 | 3.7 | 2.4 |
| | 2200[1)] | 48 | 79 | 550 | 55 | 53 | 9.6 | 8.3 | 7.1 | 5.3 | 3.6 | 2.4 |
| | 3300[1)] | 32 | 53 | 360 | 38 | 36 | 13.1 | 11.3 | 9.7 | 7.2 | 5.0 | 3.2 |
| | 4700[1)] | 24 | 39 | 250 | 28 | 27 | 15.6 | 13.5 | 11.6 | 8.6 | 5.9 | 3.9 |
| | 6000[1)] | 19 | 31 | 190 | 22 | 21 | 19.7 | 17.1 | 14.6 | 10.8 | 7.5 | 4.9 |
| 40 | 470 | 145 | 240 | 1400 | 140 | 132 | 5.0 | 4.4 | 3.7 | 2.8 | 1.9 | 1.2 |
| | 680 | 105 | 170 | 1000 | 100 | 95 | 6.2 | 5.4 | 4.6 | 3.4 | 2.4 | 1.5 |
| | 1000 | 73 | 120 | 660 | 73 | 70 | 7.4 | 6.4 | 5.5 | 4.1 | 2.8 | 1.8 |
| | 1500 | 49 | 80 | 450 | 50 | 48 | 10.1 | 8.8 | 7.5 | 5.6 | 3.8 | 2.5 |
| | 1500[1)] | 47 | 77 | 450 | 46 | 44 | 10.2 | 8.9 | 7.6 | 5.6 | 3.9 | 2.5 |
| | 2200[1)] | 32 | 53 | 300 | 32 | 31 | 13.9 | 12.0 | 10.3 | 7.6 | 5.3 | 3.4 |
| | 3000[1)] | 25 | 41 | 220 | 25 | 24 | 16.1 | 14.0 | 11.9 | 8.9 | 6.1 | 4.0 |
| | 4000[1)] | 19 | 31 | 165 | 19 | 18 | 20.5 | 17.7 | 15.2 | 11.3 | 7.8 | 5.1 |
| 63 | 220 | 210 | 350 | 1600 | 150 | 144 | 4.9 | 4.2 | 3.6 | 2.7 | 1.9 | 1.2 |
| | 330 | 145 | 240 | 1100 | 105 | 100 | 6.1 | 5.3 | 4.6 | 3.4 | 2.3 | 1.5 |
| | 470 | 105 | 170 | 750 | 78 | 74 | 7.3 | 6.3 | 5.4 | 4.0 | 2.8 | 1.8 |
| | 680 | 71 | 120 | 510 | 55 | 52 | 9.9 | 8.5 | 7.3 | 5.4 | 3.7 | 2.4 |
| | 680[1)] | 69 | 114 | 510 | 51 | 49 | 9.9 | 8.6 | 7.3 | 5.4 | 3.8 | 2.4 |
| | 1000[1)] | 53 | 88 | 430 | 44 | 42 | 12.2 | 10.6 | 9.0 | 6.7 | 4.6 | 3.0 |
| | 1500[1)] | 36 | 60 | 290 | 30 | 29 | 17.5 | 15.2 | 13.0 | 9.6 | 6.7 | 4.3 |
| | 2200[1)] | 26 | 42 | 200 | 22 | 21 | 19.3 | 16.7 | 14.3 | 10.6 | 7.3 | 4.8 |

[1)] Available from 07/2005.

# Data sheet
# B41692/B41792

## Characteristics

**Useful life**
depending on ambient temperature $T_A$ under ripple current operating conditions at $V_R$

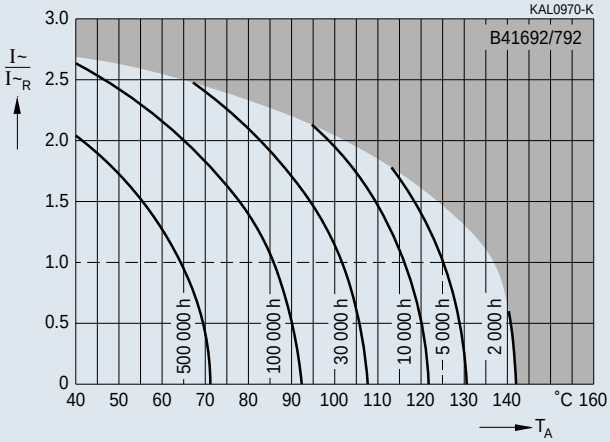


**Useful life**
depending on case temperature $T_C$ under ripple current operating conditions at $V_R$

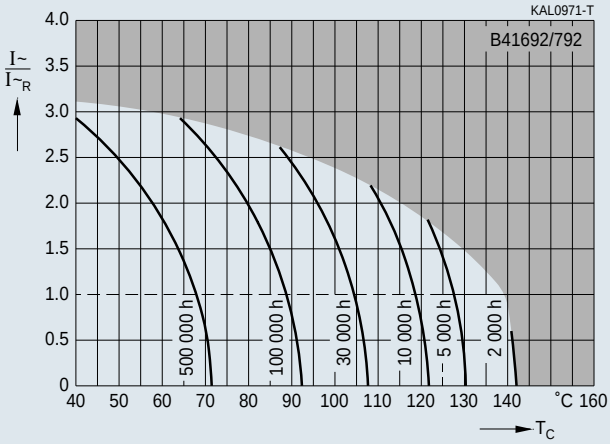


**Useful life**
depending on ambient temperature $T_A$ under ripple current operating conditions at $V_{op}$

$V_R$ = 25 V: $V_{op} \leq$ 20 V
$V_R$ = 40 V: $V_{op} \leq$ 35 V
$V_R$ = 63 V: $V_{op} \leq$ 55 V

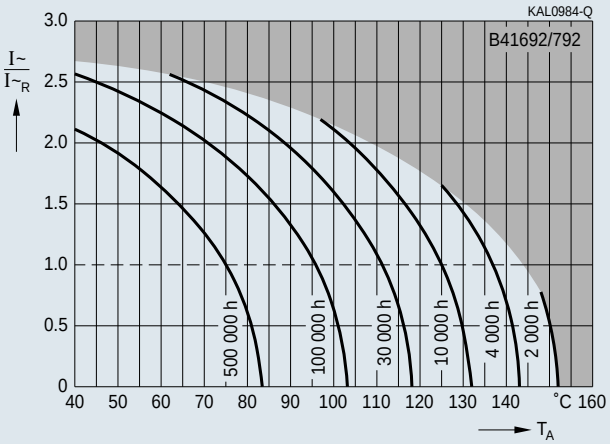


**Useful life**
depending on case temperature $T_C$ under ripple current operating conditions at $V_{op}$

$V_R$ = 25 V: $V_{op} \leq$ 20 V
$V_R$ = 40 V: $V_{op} \leq$ 35 V
$V_R$ = 63 V: $V_{op} \leq$ 55 V

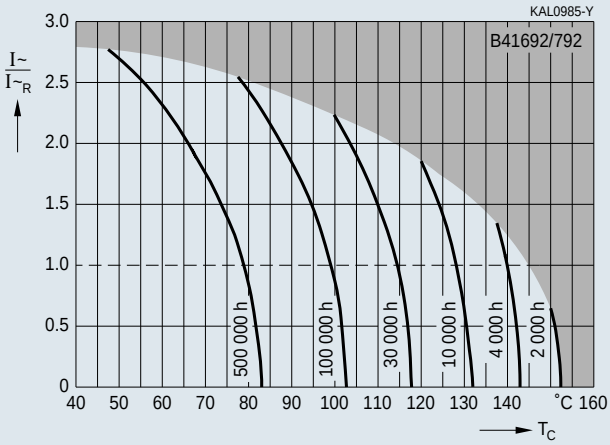

# Data sheet
# B41692/B41792

## Characteristics

**Frequency factor of permissible ripple current I~**
versus frequency f

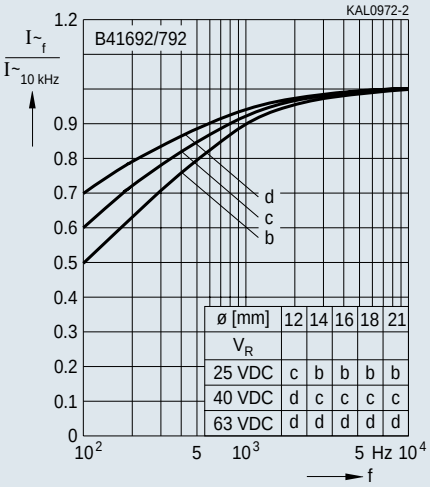


| ø [mm] | 12 | 14 | 16 | 18 | 21 |
|---|---|---|---|---|---|
| $V_R$ | | | | | |
| 25 VDC | c | b | b | b | b |
| 40 VDC | d | c | c | c | c |
| 63 VDC | d | d | d | d | d |

**Frequency characteristics of ESR**
at different temperatures
Typical behavior

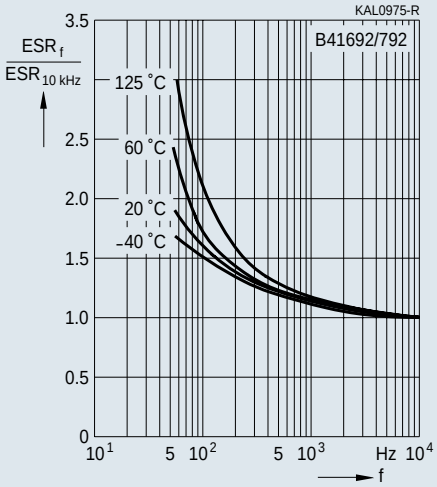


**Equivalent series resistance ESR**
versus frequency at different temperatures
Typical behavior for 2200 µF/25 V

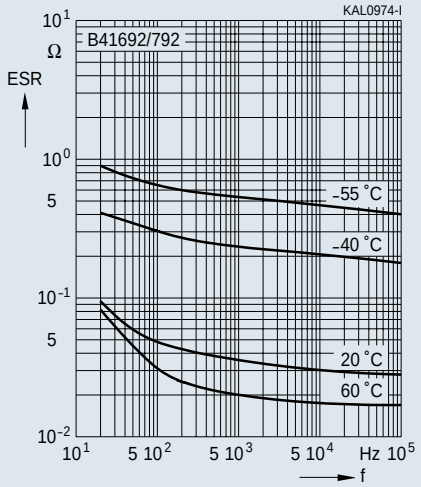


**Impedance Z**
versus frequency f at different temperatures
Typical behavior for 2200 µF/25 V

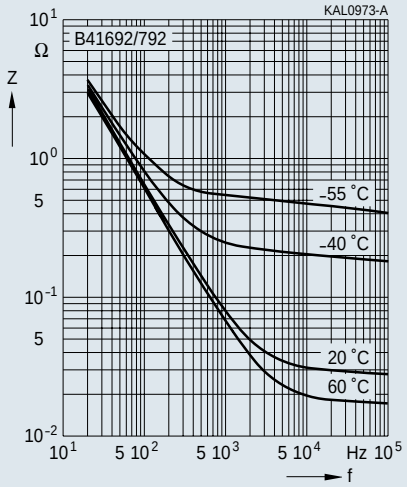

# Important notes

The following applies to all products named in this publication:

1. Some parts of this publication contain **statements about the suitability of our products for certain areas of application**. These statements are based on our knowledge of typical requirements that are often placed on our products in the areas of application concerned. We nevertheless expressly point out **that such statements cannot be regarded as binding statements about the suitability of our products for a particular customer application**. As a rule, EPCOS is either unfamiliar with individual customer applications or less familiar with them than the customers themselves. For these reasons, it is always ultimately incumbent on the customer to check and decide whether an EPCOS product with the properties described in the product specification is suitable for use in a particular customer application.

2. We also point out that **in individual cases, a malfunction of passive electronic components or failure before the end of their usual service life cannot be completely ruled out in the current state of the art, even if they are operated as specified.** In customer applications requiring a very high level of operational safety and especially in customer applications in which the malfunction or failure of a passive electronic component could endanger human life or health (e.g. in accident prevention or life-saving systems), it must therefore be ensured by means of suitable design of the customer application or other action taken by the customer (e.g. installation of protective circuitry or redundancy) that no injury or damage is sustained by third parties in the event of malfunction or failure of a passive electronic component.

3. **The warnings, cautions and product-specific notes must be observed.**

4. In order to satisfy certain technical requirements, **some of the products described in this publication may contain substances subject to restrictions in certain jurisdictions (e.g. because they are classed as "hazardous")**. Useful information on this will be found in our Material Data Sheets on the Internet (www.epcos.com/material). Should you have any more detailed questions, please contact our sales offices.

5. We constantly strive to improve our products. Consequently, **the products described in this publication may change from time to time**. The same is true of the corresponding product specifications. Please check therefore to what extent product descriptions and specifications contained in this publication are still applicable before or when you place an order.
   We also **reserve the right to discontinue production and delivery of products**. Consequently, we cannot guarantee that all products named in this publication will always be available.

6. Unless otherwise agreed in individual contracts, **all orders are subject to the current version of the "General Terms of Delivery for Products and Services in the Electrical Industry" published by the German Electrical and Electronics Industry Association (ZVEI).**

7. The trade names EPCOS, CeraDiode, CSSP, SIMID, PhaseCap, PhaseMod, SIFI, SIKOREL, SilverCap, SIOV, SIP5D, SIP5K, TOPcap, UltraCap, WindCap are **trademarks registered or pending** in Europe and in other countries. Further information will be found on the Internet at www.epcos.com/trademarks.

# Cautions and warnings

## Personal safety

The electrolytes used by EPCOS have not only been optimized with a view to the intended application, but also with regard to health and environmental compatibility. They do not contain any solvents that are detrimental to health, e.g. dimethyl formamide (DMF) or dimethyl acetamide (DMAC).

Furthermore, part of the high-voltage electrolytes used by EPCOS are self-extinguishing. They contain flame-retarding substances which will quickly extinguish any flame that may have been ignited.

As far as possible, EPCOS does not use any dangerous chemicals or compounds to produce operating electrolytes. However, in exceptional cases, such materials must be used in order to achieve specific physical and electrical properties because no safe substitute materials are currently known. However, the amount of dangerous materials used in our products has been limited to an absolute minimum. Nevertheless, the following rules should be observed when handling Al electrolytic capacitors:

- Any escaping electrolyte should not come into contact with eyes or skin.
- If electrolyte does come into contact with the skin, wash the affected parts immediately with running water. If the eyes are affected, rinse them for 10 minutes with plenty of water. If symptoms persist, seek medical treatment.
- Avoid breathing in electrolyte vapor or mists. Workplaces and other affected areas should be well ventilated. Clothing that has been contaminated by electrolyte must be changed and rinsed in water.

## Product safety

- Make sure that polar capacitors are connected with the right polarity.
- Voltages polarity clashes should be prevented by connecting a diode.
- Do not damage the insulating sleeve, especially when ring clips are used for mounting.
- Do not exceed the upper category temperature (UCT).
- Make periodic inspections of the capacitors. Before the inspection, make sure that the power supply is turned off and carefully discharge the electricity of the capacitors.
- Do not apply any mechanical stress to the capacitor terminals.
- The internal structure of single-ended capacitors may be damaged if excessive force is applied to the lead wires.
- Avoid any compressive, tensile or flexural stress.
- Do not move the capacitor after soldering to the PC board.
- Do not pick up the PC board by the soldered capacitor.
- Do not insert the capacitor on the PC board with a hole space different to the lead space specified.
- Do not exceed the specified time or temperature limits during soldering.
- Capacitors should be dipped in solder for less than 10 seconds.
- Do not allow halogenated hydrocarbons to come into contact with aluminum electrolytic capacitors.
- Avoid external energy, such as fire or electricity.
- Avoid overload of the capacitors.

Failure to follow cautions and warnings may result in the worst case in premature failure, bursting and fire.

# Product safety

## Polarity

Make sure that polar capacitors are connected with the right polarity. If the opposite polarity were to be applied, this would cause an electrolytic process resulting in the formation of a dielectric layer on the cathode foil. In this case strong internal heat generation and gas emission may occur and destroy the capacitor. Polar capacitors do not tolerate a voltage reversal. Incorrect polarities of up to 1.5 V are, however, permissible for short periods of time as the formation of a damaging oxide layer on the cathode only starts at voltages of this magnitude.

## Reverse voltage

Aluminum electrolytic capacitors are polar capacitors. Where necessary, voltages of opposite polarity should be prevented by connecting a diode. The diode's conducting-state voltage of approximately 0.8 V is permissible. Reverse voltages ≤1.5 V are tolerable for a duration of less than 1 second, but not in continuous or repetitive operation.

## Breakdown strength of insulating sleeves

The minimum breakdown strength of the insulating sleeve is 2500 VAC or 3500 VDC. A test method for verifying the breakdown strength of the sleeves is described in IEC 60384-4.
In order to ensure full breakdown strength, care must be taken not to damage the insulating sleeve, especially when ring clips are used for mounting. The insulation can be improved by using an insulating strip. In such cases, attention must be paid to any relevant regulations (e.g. VDE, BSA or UL regulations).

## Upper category temperature (UCT)

The upper category temperature is the maximum permissible ambient temperature at which a capacitor may be continuously operated. If this limit is exceeded, the capacitor may fail prematurely.
For some type series, however, operation at temperatures above the UCT is permissible for short periods of time. The maximum permissible operating temperatures are specified in the data sheets for the individual type series under "Specifications and characteristics in brief", section "Useful life".

## Maintenance

Make periodic inspections for the capacitors that have been used in the devices for industrial applications. Before the inspection, make that the power supply is turned off and carefully discharge the electricity of the capacitors. To check the capacitors, make sure of the polarity when measuring the capacitors by using a volt-ohm meter, for instance. Also, do not apply any mechanical stress to the capacitor terminals.
The following items should be checked by the periodic inspections.
Significant damage to appearances: venting, electrolyte leakage, etc.
Electrical characteristics: leakage current, capacitance, tan δ and other characteristics prescribed in the catalogs or product specifications.
If any of the above is found, replace it or take any other proper measure.
Halogenated hydrocarbons may cause serious damage if allowed to come into contact with aluminum electrolytic capacitors.

## Mounting position

An overpressure vent ensures that the gas can escape when the pressure reaches a certain level.
To prevent electrolyte from leaking out when the gas is "vented", the capacitor should be mounted in an upright position (90°). All of these mounting positions are intended to avoid a vent-down installation of the capacitor.

## Mounting of single-ended capacitors

For further information see page 67.

## Soldering

Excessive time or temperature during soldering will affect capacitor's characteristics and cause damage to the insulation sleeve. Capacitors should be dipped in solder for less than 10 seconds. Contact of the sleeve with soldering iron must be avoided.

## Soldering, cleaning agents

Halogenated hydrocarbons may cause serious damage if allowed to come into contact with aluminum electrolytic capacitors. These solvents may dissolve or decompose the insulating film and reduce the insulating properties to below the permissible level. The capacitor seals may be affected and swell, and the solvents may even penetrate them. This will lead to premature component failure.
Because of this, measures must be taken to prevent electrolytic capacitors from coming into contact with the solvents when using halogenated hydrocarbon solvents to clean printed circuit boards after soldering the components, or to remove flux residues. If it is not possible to prevent the electrolytic capacitors from being wetted by the solvent, halogen-free solvents must be used in order to eliminate the possibility of damage.

## Passive flammability

Under the influence of high external energy, such as fire or electricity, the flammable parts may get inflamed. Clause 38 of the relevant specification CECC 30000 (Harmonized System of Quality Assessment for Electronic Components; Generic Specification: Fixed Capacitors) refers to IEC Publication 695-2-2 (Needle Flame Test) for testing the passive flammability of capacitors. And in CECC 30000, severities and requirements for different categories of flammability are listed. Most of aluminum electrolytic capacitors meet the requirements of category C.

## Active flammability

In rare cases the component may ignite caused by heavy overload or some capacitor defect. One reason could be the following: During the operation of an aluminum electrolytic capacitor with nonsolid electrolyte, there is a small quantity of hydrogen developed in the component. Under normal conditions, this gas permeates easily out of the capacitor. But under exceptional circumstances, higher gas amounts may develop and may catch fire if a sparking would occur at the same time.
As explained above a fire risk can't be totally excluded. Therefore, it is recommended to use special measures in critical applications (e.g. additional encapsulation of the equipment for mining applications).