THIS DRAWING IS UNPUBLISHED. RELEASED FOR PUBLICATION -,- .
© COPYRIGHT - BY TYCO ELECTRONICS CORPORATION. ALL RIGHTS RESERVED.

LOC	DIST
CM	0

REVISIONS

P	LTR	DESCRIPTION	DATE	DWN	APVD
	F	ECO-06-013135	12JUN06	BSV	DC
	F1	REVISED PER ECO-09-022908	08OCT09	KK	AEG

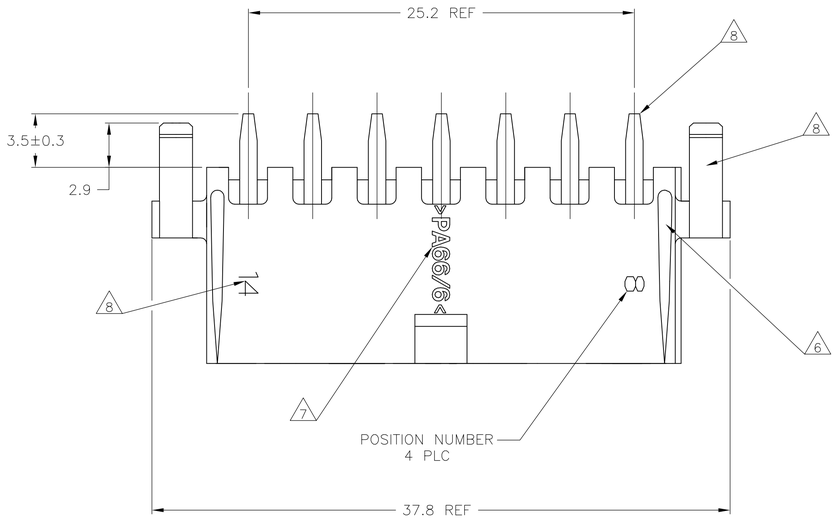

1. MATERIAL:
HOUSING: NYLON, UL94V-0 (COLOR - NATURAL, COLOR OF PARTS MAY VARY).
CONTACTS: 0.25 THK COPPER ALLOY.

2. CONTACT FINISH: 0.003 MIN THK TIN-LEAD OVER 0.00127 MIN THK NICKEL OVER ENTIRE CONTACT.

3. CONTACT FINISH: 0.00076 MIN THK GOLD PLATE ON PIN MATING SURFACE, 0.003 MIN THK TIN-LEAD PLATE ON SOLDER TAIL, ALL OVER 0.00127 MIN THK NICKEL BASE PLATE.

4. SOLDER TAIL MEETS AMP SOLDERABILITY SPECIFICATION 109-11-2.

5. MATES WITH SIMILARLY PLATED AMP-DUAC™ POWER CONNECTOR RECEPTACLE HOUSINGS/SOCKET CONTACTS.

6. RIBS ON FOUR CORNERS OPTIONAL.

7. AMP LOGO AND MATERIAL ID MAY BE LOCATED ON EITHER LONG SIDE OF PART.

8. SIZE, SHAPE OR STYLE OF THIS FEATURE MAY VARY.

9. CONTACT FINISH: 0.003 MIN THK TIN OVER 0.00127 MIN THK NICKEL OVER ENTIRE CONTACT.

10. CONTACT FINISH: 0.00076 MIN THK GOLD PLATE ON PIN MATING SURFACE, 0.003 MIN THK TIN PLATE ON SOLDER TAIL, ALL OVER 0.00127 MIN THK NICKEL BASE PLATE.

11. OBSOLETE PARTS: OBSOLETE CIS STREAMLINING PER D.RENAUD/D.SINISI

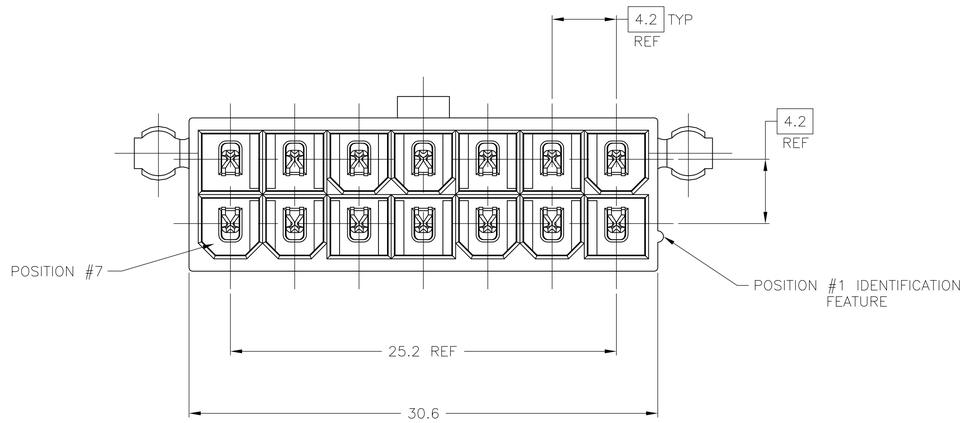

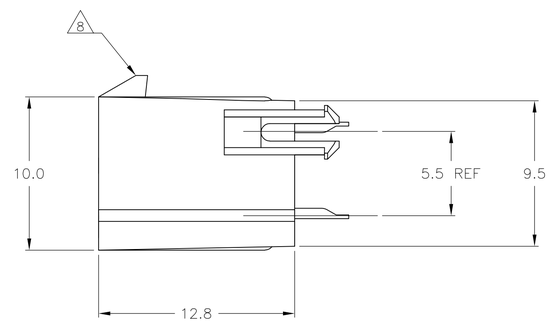

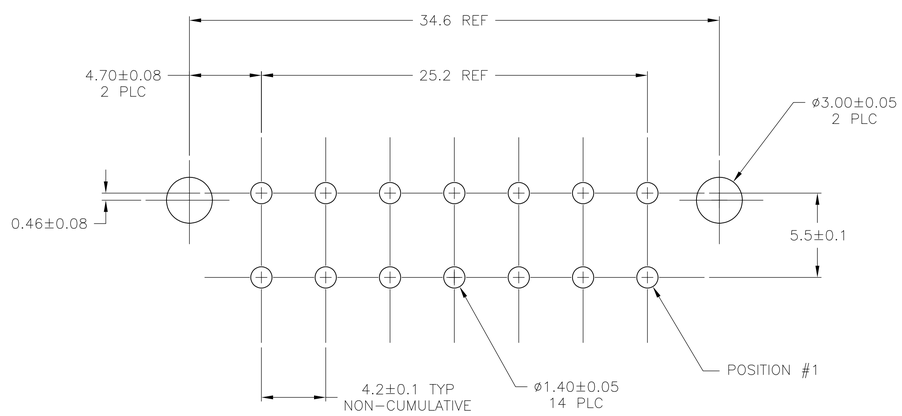

RECOMMENDED MOUNTING HOLE PATTERN
FOR 1.78 MAX THICK P.C. BOARD
COMPONENT SIDE SHOWN

11 OBSOLETE	1	10	1	1	1-794453-2
	1	9	1	1	1-794453-1
SUPERCEDED BY 1-794453-2	1	3	1	1	794453-2
SUPERCEDED BY 1-794453-1	1	2	1	1	794453-1
	MATERIAL	FINISH	MATERIAL	COLOR	PART NO.
	CONTACT		HOUSING		

THIS DRAWING IS A CONTROLLED DOCUMENT.

DWN R. VESTAL 27MAY98
CHK D. SWING 27MAY98
APVD C. CASH 27MAY98

Tyco Electronics — Tyco Electronics Corporation, Harrisburg, Pa 17105-3608

DIMENSIONS: mm

TOLERANCES UNLESS OTHERWISE SPECIFIED:
0 PLC ± -
1 PLC ± 0.2
2 PLC ± 0.13
3 PLC ± -
4 PLC ± -
ANGLES ± 0°30'

PRODUCT SPEC 108-1699
APPLICATION SPEC -
WEIGHT -

NAME: ASSEMBLY, HEADER, VERTICAL, 14 POSITION, W/PEGS, W/DRAIN HOLES, 94V-0, AMP-DUAC

MATERIAL: SEE TABLE
FINISH: SEE TABLE

SIZE	CAGE CODE	DRAWING NO	RESTRICTED TO
A1	00779	C-794453	-

CUSTOMER DRAWING — SCALE 5:1 — SHEET 1 OF 1 — REV F1