PRODUCT NO.
SEE TABLE

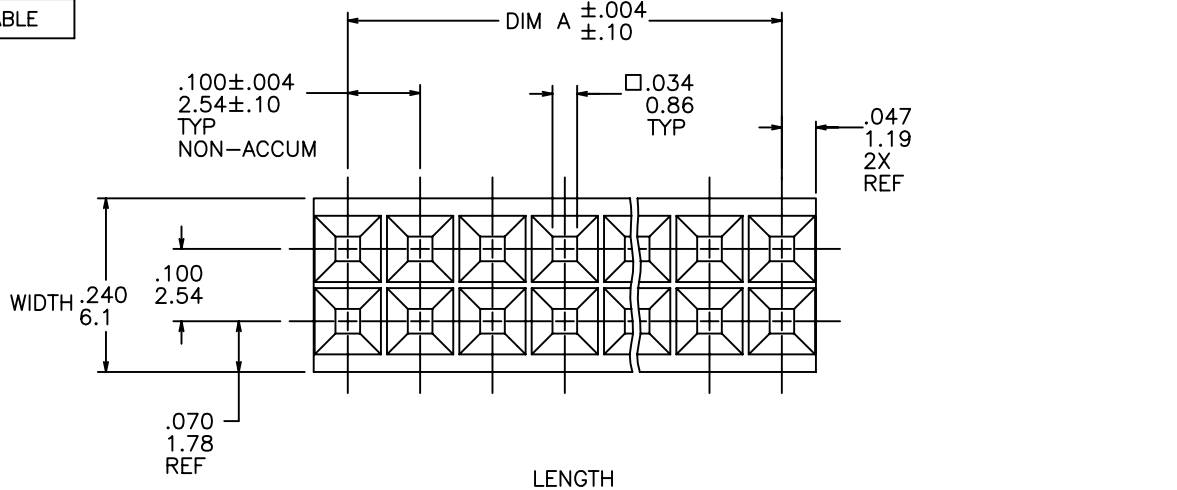

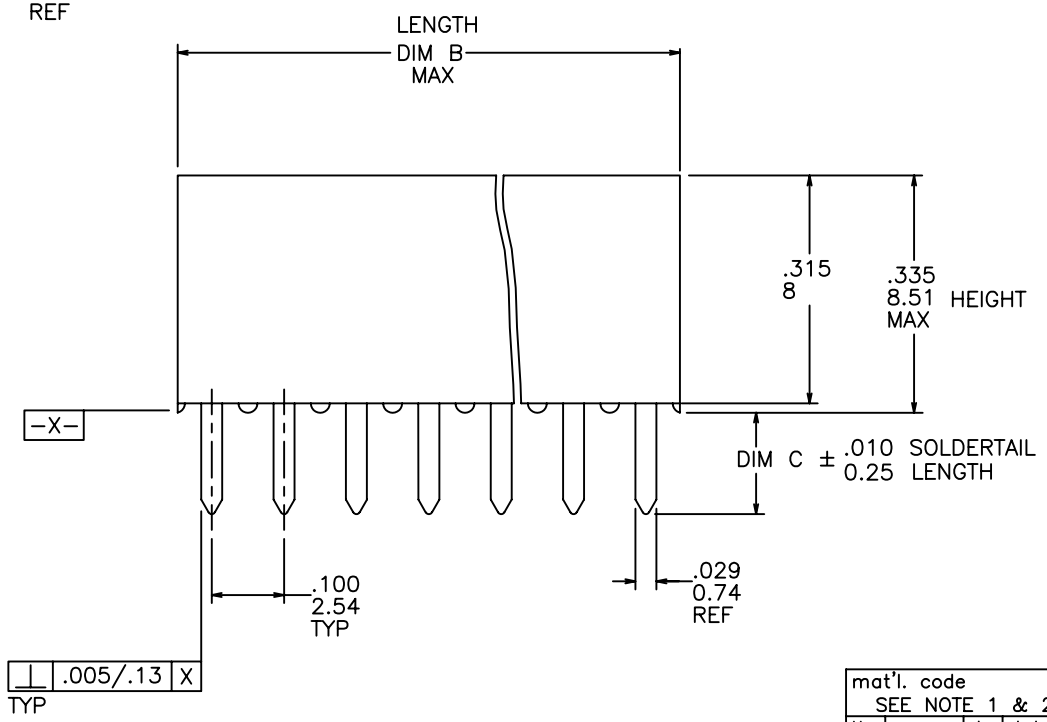

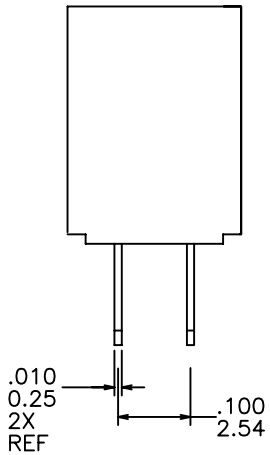

mat'l. code				surface	tolerance	projection	product family
SEE NOTE 1 & 2				ISO 1302 √	ISO 406 ISO 1101		CARD CONN
ltr	ecn no	dr	date	tolerances unless otherwise specified			title
W	ELX-N-13891	DCS	2013-01-28	angles	linear .XX±.01/.X±.3	INCH/MM	VERT. CARD CONNECTOR
X	ELX-N-14414	DCS	2013-03-05		.XXX±.005/.XX±.13		.100/2.54 CTR., DBL ROW
				0°±2°	.XXXX±.0020/.XXX±.051	scale 4:1	
S	V03-1072	LP	9/25/03	dr	M.CLOUSER	3/25/94	dwg no 65781 sheet 1 of 6 size A3
T	M05-0216	ERE	10/11/05	engr	H. SUNDY	3/25/94	
U	M06-0210	MHT	6/03/06	chr	H. SUNDY	3/25/94	
V	M07-0143	ERE	03/03/07	appd	H. SUNDY	3/25/94	type Product Customer Drawing
sheet index	revision	X	X	X	X	X	X
	sheet	1	2	3	4	5	6

form: A3

FCIconnect.com
Copyright FCI

PRODUCT NO.
SEE TABLE

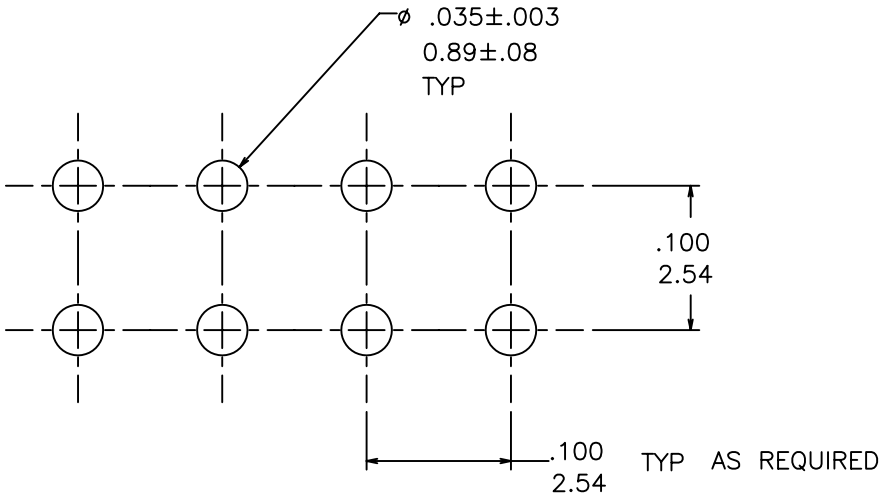

RECOMMENDED HOLE PATTERN
SCALE 4:1

NOTES:

1. HOUSING MAT'L: FILLED POLYESTER.
   FLAME RETARDANT PER UL 94V-0.
   COLOR: BLACK.
2. TERMINAL MATERIAL AND PLATING: SEE TABULATION.
3. RECOMMENDED PIN SIZE: .025±.001/.64±.03 SQUARE.
   RECOMMENDED PIN LENGTH: .210±.020/5.33±.51.
4. MARK FCI PART NUMBER AND DATE CODE LEGIBLE ON TUBE LABEL.
5. ADD "LF" SUFFIX AT THE END OF PART NUMBER FOR LEAD FREE OPTION.
6. THESE PRODUCTS MEET EUROPEAN UNION DIRECTIVES AND OTHER COUNTRY REGULATIONS AS DESCRIBED IN GS-22-008.
7. THIS PART WILL WITHSTAND EXPOSURE TO 260°C PEAK TEMPERATURE FOR 20 SECONDS IN WAVE SOLDER, INFRA-RED OR VAPOR PHASE SOLDER PROCESS.
8. "THIS PRODUCT HAS 100% TIN PLATING IN THE INTERFACE AND HAS NOT BEEN TESTED FOR WHISKER GROWTH IN ALL INTERCONNECT ENVIRONMENTS."

mat'l. code	surface ISO 1302	tolerance ISO 406 ISO 1101	projection	product family CARD CONN
ltr / ecn no / dr / date	tolerances unless otherwise specified			title
X	angles 0°±2°	linear .XX±.01/.X±.3 / .XXX±.0.005/.XX±.13 / .XXXX±.0020/.XXX±.051	INCH/MM	VERT. CARD CONNECTOR .100/2.54 CTR., DBL ROW
			scale 4:1	
	dr M.CLOUSER 3/25/94			dwg no 65781 sheet 2 of 6 size A3
	engr H. SUNDY 3/25/94			
	chr H. SUNDY 3/25/94			
	appd H. SUNDY 3/25/94			type Product Customer Drawing
sheet index / revision sheet				

Copyright FCI
FCIconnect.com

form: A3

PRODUCT NUMBER	SIZE	DIM A	DIM B	MATERIAL AND PLATING	DIM C	LEAD FREE OPTION
65781-001				UNASSIGNED		
~~-002~~	~~2X2~~	~~.100 / 2.54~~	~~.200 / 5.08~~		~~.140/3.56~~	OBS
-003	2X3	.200 / 5.08	.300 / 7.62	BODY MAT'L: BRASS BODY PLATING: 40u"/1.02u MIN THICK C.I. GOLD INSIDE CONTACT AREA, 2u"/.051u GOLD FLASH MIN ON REST OF TERMINAL BODY, OVER 50u"/ 1.27u MIN NICKEL SPRING MAT'L: BeCu HEAT TREATED SPRING PLATING: GOLD FLASH		NOTE 5,6
-004	2X4	.300 / 7.62	.400 / 10.16			
-005	2X5	.400 / 10.16	.500 / 12.70			
-006	2X6	.500 / 12.70	.600 / 15.24			
-007	2X7	.600 / 15.24	.700 / 17.78			
-008	2X8	.700 / 17.78	.800 / 20.32			
-009	2X9	.800 / 20.32	.900 / 22.86			
-010	2X10	.900 / 22.86	1.000 / 25.40			
-011	2X11	1.000 / 25.40	1.100 / 27.94			
-012	2X12	1.100 / 27.94	1.200 / 30.48			
-013	2X13	1.200 / 30.48	1.300 / 33.02			
-014	2X14	1.300 / 33.02	1.400 / 35.56			
-015	2X15	1.400 / 35.56	1.500 / 38.10			
-016	2X16	1.500 / 38.10	1.600 / 40.64			
-017	2X17	1.600 / 40.64	1.700 / 43.18			
-018	2X18	1.700 / 43.18	1.800 / 45.72			
-019	2X19	1.800 / 45.72	1.900 / 48.26			
-020	2X20	1.900 / 48.26	2.000 / 50.80			
-021	2X21	2.000 / 50.80	2.100 / 53.34			
-022	2X22	2.100 / 53.34	2.200 / 55.88			
-023	2X23	2.200 / 55.88	2.300 / 58.42			
-024	2X24	2.300 / 58.42	2.400 / 60.96			
-025	2X25	2.400 / 60.96	2.500 / 63.50			
-026	2X26	2.500 / 63.50	2.600 / 66.04			
-027	2X27	2.600 / 66.04	2.700 / 68.58			
-028	2X28	2.700 / 68.58	2.800 / 71.12			
-029	2X29	2.800 / 71.12	2.900 / 73.66			
-030	2X30	2.900 / 73.66	3.000 / 76.20			
-031	2X31	3.000 / 76.20	3.100 / 78.74			
-032	2X32	3.100 / 78.74	3.200 / 81.28	BODY MAT'L: BRASS BODY PLATING: 40u"/1.02u MIN THICK C.I. GOLD INSIDE CONTACT AREA, 2u"/.051u GOLD FLASH MIN ON REST OF TERMINAL BODY, OVER 50u"/ 1.27u MIN NICKEL SPRING MAT'L: BeCu HEAT TREATED SPRING PLATING: GOLD FLASH		
-033	2X33	3.200 / 81.28	3.300 / 83.82			
-034	2X34	3.300 / 83.82	3.400 / 86.36			
-035	2X35	3.400 / 86.36	3.500 / 88.90			
65781-036	2X36	3.500 / 88.90	3.600 / 91.44		.140/3.56	NOTE 5,6

mat'l. code				surface ISO 1302	tolerance ISO 406 ISO 1101	projection	product family CARD CONN
ltr	ecn no	dr	date	tolerances unless otherwise specified			title
X				angles 0°±2°	linear .XX±.01/.X±.3 / .XXX±.0.005/.XX±.13 / .XXXX±.0020/.XXX±.051	INCH/MM	VERT. CARD CONNECTOR .100/2.54 CTR., DBL ROW
						scale 4:1	
				dr	M.CLOUSER	3/25/94	dwg no 65781 — sheet 3 of 6 — size A3
				engr	H. SUNDY	3/25/94	
				chr	H. SUNDY	3/25/94	
				appd	H. SUNDY	3/25/94	type Product Customer Drawing
sheet index	revision sheet						

form: A3

Copyright FCI

FCIconnect.com

PRODUCT NUMBER	SIZE	DIM A	DIM B	MATERIAL AND PLATING	DIM C	LEAD FREE OPTION	
65781-037				UNASSIGNED			
~~-038~~	~~2X2~~	~~.100 / 2.54~~	~~.200 / 5.08~~		~~.140/3.56~~		OBS
-039	2X3	.200 / 5.08	.300 / 7.62	BRASS 100u"/2.54u THICK SN PLATE SPRING MAT'L: BeCu HEAT TREATED SPRING PLATING: 30u"/76u MIN ELECTROLESS TIN		NOTES 5,6,8	
-040	2X4	.300 / 7.62	.400 / 10.16				
-041	2X5	.400 / 10.16	.500 / 12.70				
-042	2X6	.500 / 12.70	.600 / 15.24				
-043	2X7	.600 / 15.24	.700 / 17.78				
-044	2X8	.700 / 17.78	.800 / 20.32				
-045	2X9	.800 / 20.32	.900 / 22.86				
-046	2X10	.900 / 22.86	1.000 / 25.40				
-047	2X11	1.000 / 25.40	1.100 / 27.94				
-048	2X12	1.100 / 27.94	1.200 / 30.48				
-049	2X13	1.200 / 30.48	1.300 / 33.02				
-050	2X14	1.300 / 33.02	1.400 / 35.56				
-051	2X15	1.400 / 35.56	1.500 / 38.10				
-052	2X16	1.500 / 38.10	1.600 / 40.64				
-053	2X17	1.600 / 40.64	1.700 / 43.18				
-054	2X18	1.700 / 43.18	1.800 / 45.72				
-055	2X19	1.800 / 45.72	1.900 / 48.26				
-056	2X20	1.900 / 48.26	2.000 / 50.80				
-057	2X21	2.000 / 50.80	2.100 / 53.34				
-058	2X22	2.100 / 53.34	2.200 / 55.88				
-059	2X23	2.200 / 55.88	2.300 / 58.42				
-060	2X24	2.300 / 58.42	2.400 / 60.96				
-061	2X25	2.400 / 60.96	2.500 / 63.50				
-062	2X26	2.500 / 63.50	2.600 / 66.04				
-063	2X27	2.600 / 66.04	2.700 / 68.58				
-064	2X28	2.700 / 68.58	2.800 / 71.12				
-065	2X29	2.800 / 71.12	2.900 / 73.66				
-066	2X30	2.900 / 73.66	3.000 / 76.20				
-067	2X31	3.000 / 76.20	3.100 / 78.74				
-068	2X32	3.100 / 78.74	3.200 / 81.28	BRASS 100u"/2.54u THICK SN PLATE SPRING MAT'L: BeCu HEAT TREATED SPRING PLATING: 30u"/76u MIN ELECTROLESS TIN			
-069	2X33	3.200 / 81.28	3.300 / 83.82				
-070	2X34	3.300 / 83.82	3.400 / 86.36				
-071	2X35	3.400 / 86.36	3.500 / 88.90				
65781-072	2X36	3.500 / 88.90	3.600 / 91.44		.140/3.56	NOTES 5,6,8	

FCIconnect.com

Copyright FCI

mat'l. code	surface ISO 1302	tolerance ISO 406 ISO 1101	projection	product family CARD CONN	
ltr / ecn no / dr / date	tolerances unless otherwise specified			title	
X	angles 0°±2°	linear .XX±.01/.X±.3 / .XXX±.0.005/.XX±.13 / .XXXX±.0020/.XXX±.051	INCH/MM scale 4:1	VERT. CARD CONNECTOR .100/2.54 CTR., DBL ROW	
	dr M.CLOUSER 3/25/94			dwg no 65781	sheet 4 of 6 size A3
	engr H. SUNDY 3/25/94				
	chr H. SUNDY 3/25/94				
	appd H. SUNDY 3/25/94			type Product Customer Drawing	
sheet index / revision sheet					

form: A3

PRODUCT NUMBER	SIZE	DIM A	DIM B	MATERIAL AND PLATING	DIM C	LEAD FREE OPTION
65781–073				UNASSIGNED		
–074	2X2	.100 / 2.54	.200 / 5.08		.140/3.56	NOTE 5,6
–075	2X3	.200 / 5.08	.300 / 7.62	BODY MAT'L: Cu Ni		
–076	2X4	.300 / 7.62	.400 / 10.16	10u"/.25u Au FLASH INSIDE BODY		
–077	2X5	.400 / 10.16	.500 / 12.70	CONTACT AREA ONLY WITH .001/.03		
–078	2X6	.500 / 12.70	.600 / 15.24	MIN HIGH GOLD DOT.		
–079	2X7	.600 / 15.24	.700 / 17.78	SPRING PLATING: GOLD FLASH		
–080	2X8	.700 / 17.78	.800 / 20.32	SPRING MAT'L: BeCu HEAT TREAT		
–081	2X9	.800 / 20.32	.900 / 22.86			
–082	2X10	.900 / 22.86	1.000 / 25.40			
–083	2X11	1.000 / 25.40	1.100 / 27.94			
–084	2X12	1.100 / 27.94	1.200 / 30.48			
–085	2X13	1.200 / 30.48	1.300 / 33.02			
–086	2X14	1.300 / 33.02	1.400 / 35.56			
–087	2X15	1.400 / 35.56	1.500 / 38.10			
–088	2X16	1.500 / 38.10	1.600 / 40.64			
–089	2X17	1.600 / 40.64	1.700 / 43.18			
–090	2X18	1.700 / 43.18	1.800 / 45.72			
–091	2X19	1.800 / 45.72	1.900 / 48.26			
–092	2X20	1.900 / 48.26	2.000 / 50.80			
–093	2X21	2.000 / 50.80	2.100 / 53.34			
–094	2X22	2.100 / 53.34	2.200 / 55.88			
–095	2X23	2.200 / 55.88	2.300 / 58.42			
–096	2X24	2.300 / 58.42	2.400 / 60.96			
–097	2X25	2.400 / 60.96	2.500 / 63.50			
–098	2X26	2.500 / 63.50	2.600 / 66.04			
–099	2X27	2.600 / 66.04	2.700 / 68.58			
–100	2X28	2.700 / 68.58	2.800 / 71.12			
–101	2X29	2.800 / 71.12	2.900 / 73.66			
–102	2X30	2.900 / 73.66	3.000 / 76.20			
–103	2X31	3.000 / 76.20	3.100 / 78.74			
–104	2X32	3.100 / 78.74	3.200 / 81.28	BODY MAT'L: Cu Ni		
–105	2X33	3.200 / 81.28	3.300 / 83.82	10u"/.25u Au FLASH INSIDE BODY		
–106	2X34	3.300 / 83.82	3.400 / 86.36	CONTACT AREA ONLY WITH .001/.03		
–107	2X35	3.400 / 86.36	3.500 / 88.90	MIN HIGH GOLD DOT.		
				SPRING PLATING: GOLD FLASH		
				SPRING MAT'L: BeCu HEAT TREAT		
65781–108	2X36	3.500 / 88.90	3.600 / 91.44		.140/3.56	NOTE 5,6

FCIconnect.com

Copyright FCI

mat'l. code	surface ISO 1302	tolerance ISO 406 ISO 1101	projection
ltr / ecn no / dr / date	tolerances unless otherwise specified		
X	angles 0°±2°	linear .XX±.01/.X±.3 / .XXX±.0.005/.XX±.13 / .XXXX±.0020/.XXX±.051	INCH/MM
			scale 4:1
	dr	M.CLOUSER	3/25/94
	engr	H. SUNDY	3/25/94
	chr	H. SUNDY	3/25/94
	appd	H. SUNDY	3/25/94
sheet index / revision sheet			

product family: CARD CONN

title: VERT. CARD CONNECTOR .100/2.54 CTR., DBL ROW

dwg no: 65781 — sheet 5 of 6 — size A3

type: Product Customer Drawing

form: A3

PRODUCT NUMBER	SIZE	DIM A	DIM B	MATERIAL AND PLATING	DIM C	LEAD FREE OPTION
65781-149	2X5	.400/10.16	.500/12.70	BRASS 100u"/2.54u THICK SN PLATE SPRING MAT'L: BeCu HEAT TREATED SPRING PLATING: 30u"/76u MIN ELECTROLESS TIN	.115/2.92	NOTES 5,6,8
65781-151	2X7	.600/15.24	.700/17.78		.115/2.92	
65781-152	2X8	.700/17.78	.800/20.32		.115/2.92	
65781-153	2X13	1.200 / 30.48	1.300 / 33.02	CONTACT BODY MATERIAL: BRASS CONTACT BODY PLATING: 30u"/0.76u MIN GOLD INSIDE CONTACT AREA AND GOLD FLASH ON TAILS OVER 50u"/1.27u MIN NICKEL SPRING MATERIAL: BeCu HEAT TREATED SPRING PLATING: GOLD FLASH ON CONTACT AREA	.140/3.56	NOTE 5,6
65781-154	2X15	1.400 / 35.56	1.500 / 38.10		.140/3.56	
65781-155	2X17	1.600 / 40.64	1.700 / 43.18		.140/3.56	
65781-156	2X18	1.700 / 43.18	1.800 / 45.72		.140/3.56	
65781-157	2X20	1.900 / 48.26	2.000 / 50.80		.140/3.56	
65781-158	2X30	2.900 / 73.66	3.000 / 76.20		.140/3.56	
65781-159	2X10	.900 / 22.86	1.000 / 25.40		.140/3.56	
65781-160	2X5	.400 / 10.16	.500 / 12.70		.140/3.56	

mat'l. code				surface ISO 1302	tolerance ISO 406 ISO 1101	projection	product family CARD CONN
ltr	ecn no	dr	date	tolerances unless otherwise specified			title
X				angles 0°±2°	linear .XX±.01/.X±.3 / .XXX±.0.005/.XX±.13 / .XXXX±.0020/.XXX±.051	INCH/MM	VERT. CARD CONNECTOR .100/2.54 CTR., DBL ROW
						scale 4:1	
				dr	M.CLOUSER	3/25/94	dwg no 65781 sheet 6 of 6 size A3
				engr	H. SUNDY	3/25/94	
				chr	H. SUNDY	3/25/94	
				appd	H. SUNDY	3/25/94	type Product Customer Drawing
sheet index	revision sheet						

form: A3

FCIconnect.com
Copyright FCI