THIS DRAWING IS UNPUBLISHED. RELEASED FOR PUBLICATION -,- .
© COPYRIGHT - By - ALL RIGHTS RESERVED.

LOC	DIST
G	14

REVISIONS

P	LTR	DESCRIPTION	DATE	DWN	APVD
	J1	REV PER ECO-12-014455	13SEP12	KH	DR

AMP WIRE RANGE	Listed FILE E13288	LR7189 Certified
22-16 AWG SOLID OR STRANDED	22-16 AWG SOLID OR STRANDED	22-16 AWG SOLID OR STRANDED

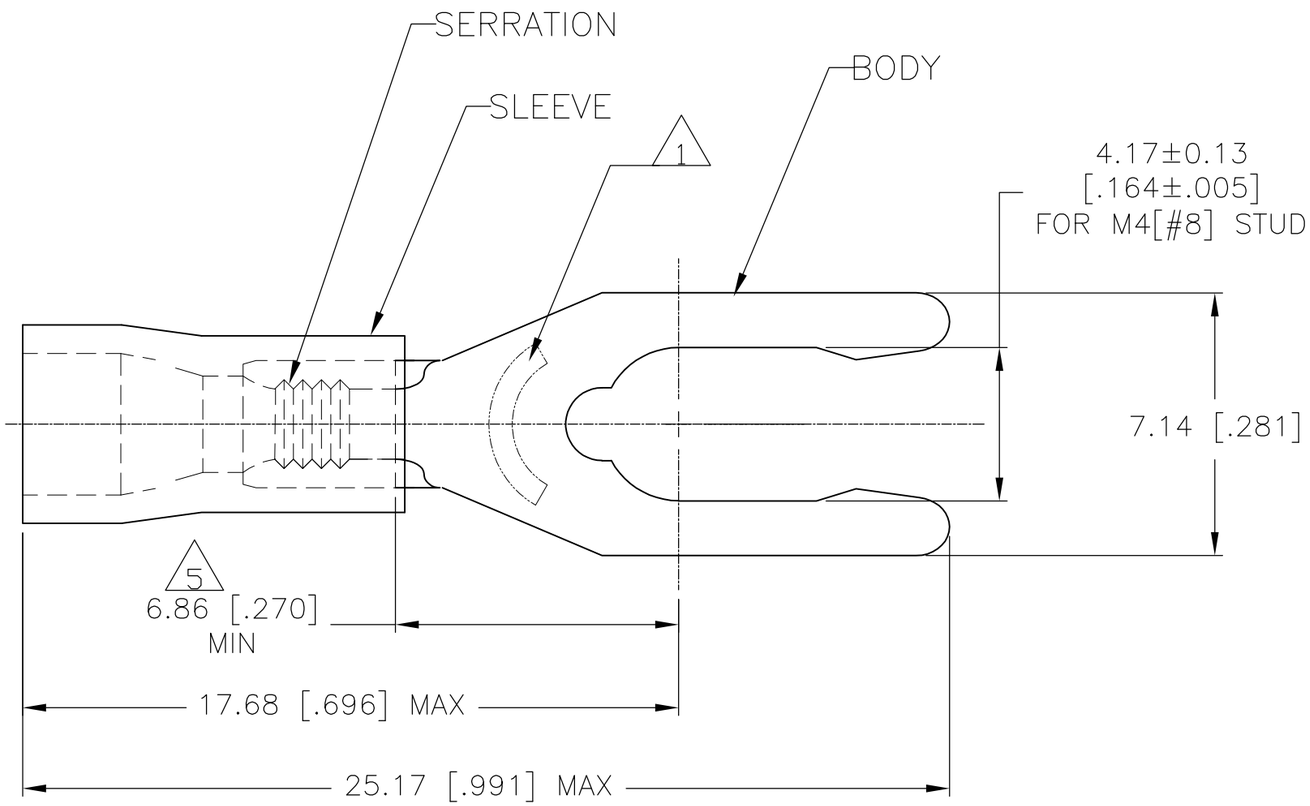

1. STAMP "AMP 22-18*" APPROX AS SHOWN 22-16 TERMINALS ARE STAMPED 22-18 IN ACCORDANCE WITH MILITARY SPEC SAE AS7928 COMMERCIAL WIRE RANGE IS 22-16
2. WIRE INSUL DIA, 2.67-3.56 [.105-.140]
3. TONGUE MATL THK, 0.79±0.05 [.031±.002]
4. MATERIAL: BODY - BRASS. PER ASTM B36
   SLEEVE - PVC, COLOR - RED
5. APPLIES FROM THE EDGE OF METAL BARREL TO THE CENTER OF THE STUD.

QTY	PACKAGE TYPE	PART NO
100	LOOSE PIECE,BOX	8-52454-1
5000	ON TAPE, REEL	52454-1
1000	LOOSE PIECE	52454

CUSTOMER SERVICE SYSTEMS

FOR ADDITIONAL PRODUCT INFORMATION OR COPIES OF DRAWINGS AND TECHNICAL DOCUMENTS	PRODUCT INFORMATION CENTER 1-800-522-6752
FOR APPLICATION TOOLING INFORMATION	TOOLING ASSISTANCE CENTER 1-800-722-1111
FOR ORDER ENTRY	1-800-526-5142

THIS DRAWING IS UNPUBLISHED. THIS DRAWING IS A CONTROLLED DOCUMENT FOR AMP INCORPORATED. IT IS SUBJECT TO CHANGE AND THE CONTROLLING ENGINEERING ORGANIZATION SHOULD BE CONTACTED FOR THE LATEST REVISION.

MAX RECOMMENDED OPERATING TEMPERATURE: 105°C [221°F]

VOLTAGE RATING: 600V MAX (1000V FIXTURE OR SIGN)

CIRCULAR MIL AREA: 0.26-1.65mm² [509-3260] SOLID OR STRANDED

THIS DRAWING IS A CONTROLLED DOCUMENT.

DIMENSIONS: mm [INCHES]

TOLERANCES UNLESS OTHERWISE SPECIFIED:

0 PLC	± -
1 PLC	± -
2 PLC	± 0.20 [.008]
3 PLC	± -
4 PLC	± -
ANGLES	± -

MATERIAL - 4

FINISH TIN PER ASTM B545

DWN	L OLMEDA	26JUN95
CHK	M ELLIS	26JUN95
APVD	G NGO	26JUN95
PRODUCT SPEC	UL 486A-B	
APPLICATION SPEC	—	
WEIGHT	—	

TE Connectivity

NAME: TERMINAL, SPRING SPADE, LONG, PLASTI-GRIP, WIRE SIZE: 22-16 AWG

SIZE	CAGE CODE	DRAWING NO	RESTRICTED TO
A3	00779	C-52454	—

CUSTOMER DRAWING | SCALE 6:1 | SHEET 1 OF 1 | REV J1

1470-19 (3/11)