THIS COPY IS PROVIDED ON A RESTRICTED BASIS AND IS NOT TO BE USED IN ANY WAY DETRIMENTAL TO THE INTERESTS OF PANDUIT CORP.

PANDUIT PART #	STUD SIZE		DIMENSIONS in. [mm]				
	ENGLISH	METRIC	L ± .03 [0,8]	W ± .01 [0,3]	C ± .015 [0,4]	M ± .03 [0,8]	H ± .01 [0,3]
PV18-4RNB-3K	#4	--	.74 [18,8]	.21 [5,3]	.19 [4,8]	.63 [16,0]	.12 [3,1]
PV18-4RB-3K	#4	--	.78 [19,8]	.25 [6,4]	.20 [5,1]	.65 [16,5]	.12 [3,1]
PMV1-3RB-3K	--	M3	.76 [19,3]	.23 [5,8]	.20 [5,1]	.65 [16,5]	.13 [3,3]
PV18-6RNB-3K	#6	M3,5	.75 [19,1]	.23 [5,8]	.19 [4,8]	.63 [16,0]	.15 [3,8]
PV18-6RB-3K	#6	M3,5	.78 [19,8]	.25 [6,4]	.20 [5,1]	.65 [16,5]	.15 [3,8]
PV18-8RB-3K	#8	M4	.86 [21,8]	.31 [7,9]	.25 [6,4]	.70 [17,8]	.17 [4,3]
PV18-10RB-3K	#10	--	.86 [21,8]	.31 [7,9]	.25 [6,4]	.70 [17,8]	.20 [5,1]
PMV1-5RB-3K	--	M5	.88 [22,4]	.35 [8,9]	.25 [6,4]	.70 [17,8]	.21 [5,3]
PV18-14RB-3K	1/4"	M6	1.06 [26,9]	.45 [11,4]	.38 [9,7]	.83 [21,1]	.27 [6,9]
PV18-56RB-2K	5/16"	M8	1.06 [26,9]	.46 [11,7]	.38 [9,7]	.83 [21,1]	.33 [8,4]
PV18-38RB-2K	3/8"	M10	1.15 [29,2]	.53 [13,5]	.43 [10,9]	.88 [22,4]	.39 [9,9]

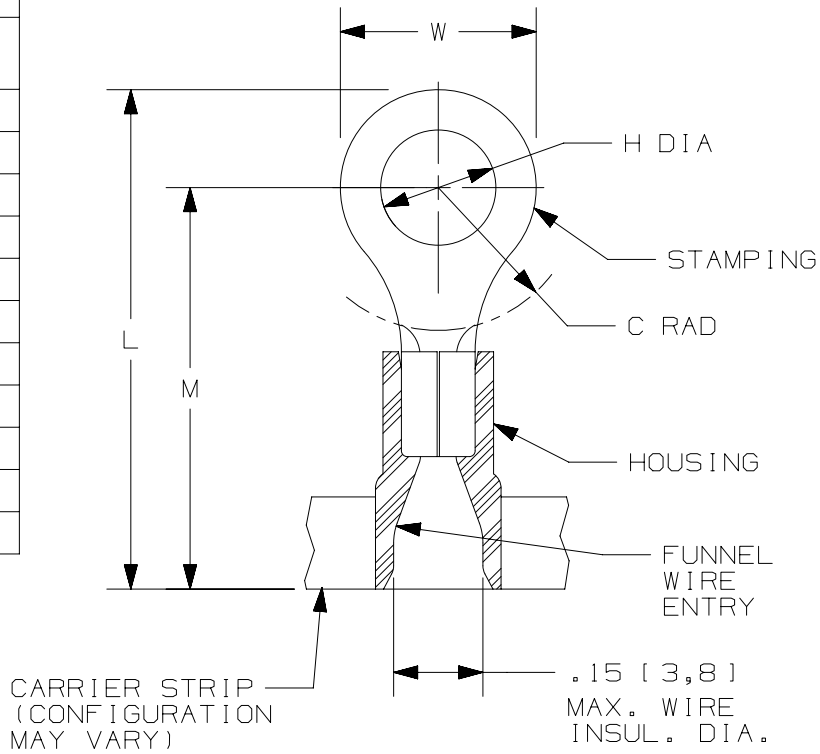

NOTES:

1. USED FOR:
   A. #22-18 AWG [0,5-1,0 mm²] SOLID OR STRANDED COPPER WIRE
   B. 221°F [105°C] MAX. OPERATING TEMPERATURE
   C. 600 V. MAX. VOLTAGE RATING

2. INSTALLATION TOOLS:
   A. PRESSES: CP-861, CP-862, CP-871
   B. APPLICATOR: CA-800EZ, CA9
   C. DIE INSERTS FOR #4-1/4" STUD: CD-800-1, CD9-1A
   D. DIE INSERTS FOR 5/16" & 3/8" STUD: CD-800-1, CD9-1B

3. WIRE STRIP LENGTH: 1/4" $^{+1/32}_{-0}$ [6,4$^{+0,8}_{-0}$]

4. MATERIAL:
   A. STAMPING: .03" [0,8] THK COPPER, TIN PLATED
   B. HOUSING: VINYL, RED

5. DIMENSIONS IN BRACKETS ARE METRIC EQUIVALENT

LISTED 587H E52164

CERTIFIED LR31212

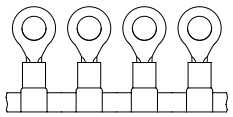

REV	DATE	BY	CHK	APR	DESCRIPTION	ECN
11	06.30.16	JHNU	JHNU	RGB	REVISED PART NUMBERS: ADDED PKG QTY. REMOVED NOTE REFERENCING PKG. QTY.	N41069BA-DC
10	09.17.12	JBN	LCA	VMB	ADDED METRIC EQUIVALENT. REVISED NOTES. UPDATED DRAWING TO CURRENT STANDARDS.	A41069

TITLE
RING TERMINALS, 2 PC. VINYL INSULATED, #22-18
CUSTOMER DRAWING

ITEM REVISION NAME: N41069BA/11

DATASET FILE NAME: N41069BA_DC/11A

UNLESS OTHERWISE SPECIFIED, DIMENSIONAL TOLERANCES ARE: IN [mm]
.X ± .1 [2.54] .XXX ± .005 [.13]
.XX ± .01 [.25] ANGLES ± 5 °
THIRD ANGLE PROJECTION

MATERIAL: SEE NOTES

DRAWING NUMBER: A41069

DRAWN BY	DATE	CHK	SCALE		SIZE
CLK	-	FS	N.T.S.	SHT 1 OF 1	A

D10100DA/15