samtec

FLEX STACK

(1,27mm) .050"

ZML SERIES

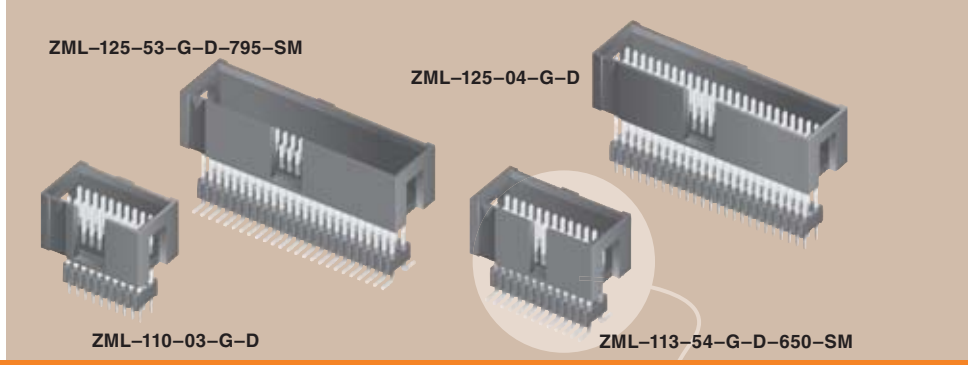

SHROUDED ELEVATED STACKER

SPECIFICATIONS

For complete specifications and recommended PCB layouts see www.samtec.com?ZML

Insulator Material:
Black LCP
Terminal Material:
Phosphor Bronze
Plating:
Au or Sn over 50µ" (1,27µm) Ni
Current Rating:
1A
Operating Temp Range:
-55°C to +105°C with Tin;
-55°C to +125°C with Gold
RoHS Compliant:
Yes

FILE NO. E111594

Processing:

Lead-Free Solderable:
Yes
SMT Lead Coplanarity:
(0,10mm) .004" max (05-20)
(0,15mm) .006" max (25-40)

Mates with:
SMS, RSM

APPLICATIONS

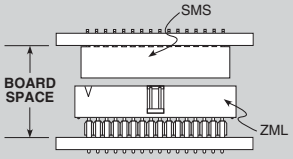

APPLICATIONS	BOARD SPACE
ZML Style -01 mated with SMS	(13,72) .540
ZML Style -02 mated with SMS	(15,11) .595
ZML Style -03 mated with SMS	(17,53) .690
ZML Style -04 mated with SMS	(20,57) .810

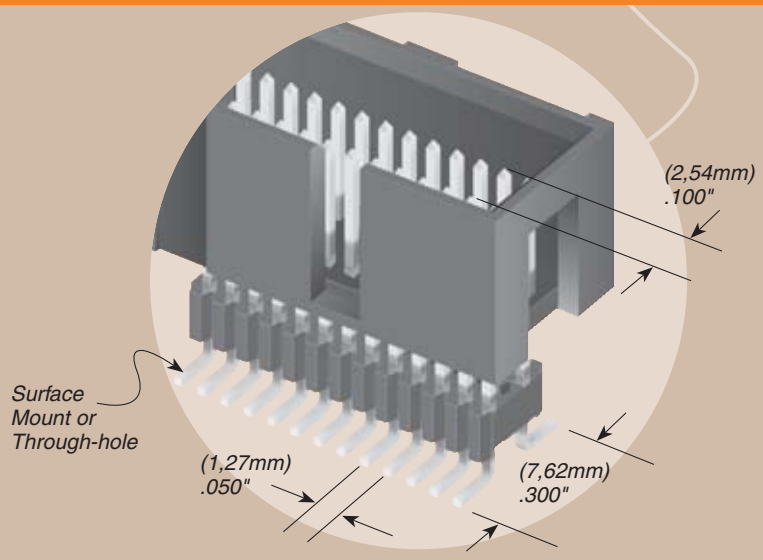

ZML	–	1	NO. PINS PER ROW	–	LEAD STYLE	–	PLATING OPTION	–	D	–	BODY HEIGHT	–	TAIL STYLE

05, 08, 10, 13, 17, 20, 25, 30, 32, 36, 40
(Call Samtec for other sizes)

Specify LEAD STYLE from chart

–L
= 10µ" (0,25µm) Gold on post, Matte Tin on tail

–G
= 10µ" (0,25µm) Gold on post, Gold flash on tail

(Leave blank for Through-hole)
–"XXX"
= –SM Body Height
(Specify board space "B" in inches from lead style charts.)

(Leave blank for Through-hole)
–SM
= Surface Mount

THROUGH-HOLE	
LEAD STYLE	BODY HEIGHT (C)
–01	(12,83) .505
–02	(14,22) .560
–03	(16,64) .655
–04	(19,69) .775

SURFACE MOUNT		
LEAD STYLE	POST HEIGHT (A)	BODY HEIGHT (B)
–53	(3,05) .120	(13,46) .530 to (20,19) .795
–54	(5,84) .230	(13,46) .530 to (17,40) .685

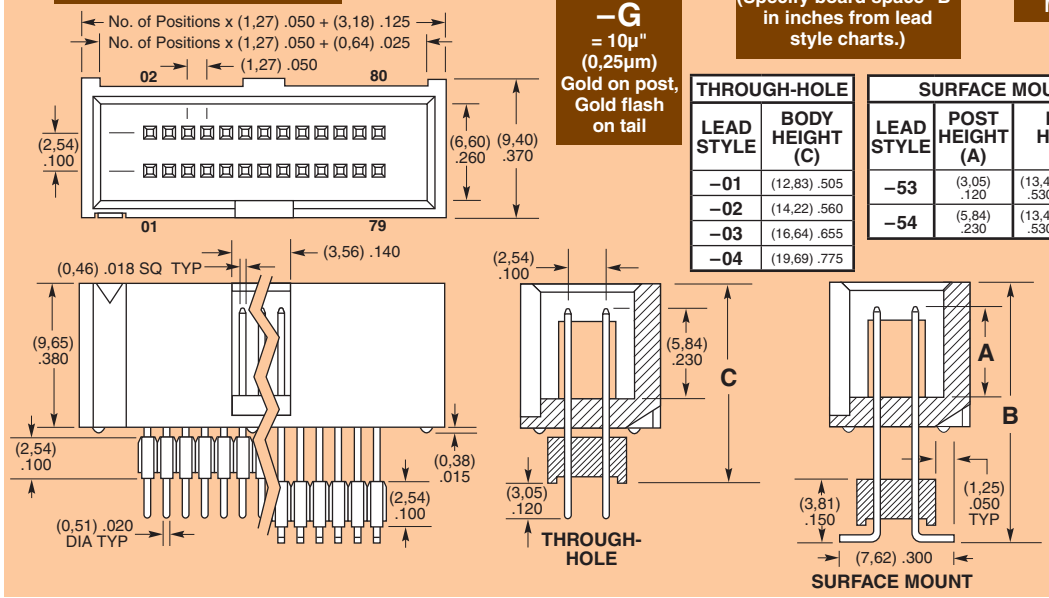

Note: Other Gold plating options available. Contact Samtec.

Note: This Series is non-standard, non-returnable.

Due to technical progress, all designs, specifications and components are subject to change without notice.

SAMTEC USA • Tel: 1-800-SAMTEC-9 or 812-944-6733 **SAMTEC SILICON VALLEY** • Tel: 408-395-5900 **SAMTEC SOUTHERN CALIFORNIA** • Tel: 1-800-726-8329
SAMTEC AMERICA LATINA COMERCIO EXTERIOR LTDA • Tel: (+55 31) 3786 3227 **SAMTEC UNITED KINGDOM** • Tel: 44 01236 739292 **SAMTEC GERMANY** • Tel: +49 (0) 89 / 89460-0
SAMTEC FRANCE • Tel: 33 01 60 95 06 60 **SAMTEC ITALY** • Tel: 39 039 6890337 **SAMTEC NORDIC/BALTIC** • Tel: +46-84477280 **SAMTEC BENELUX** • Tel: 44 01236 739292 **SAMTEC ISRAEL** • Tel: 972-3-7526600
SAMTEC INDIA • Tel: +91-80-3272 1612 **SAMTEC ASIA PACIFIC** • Tel: 65 6745-5955 **SAMTEC JAPAN** • Tel: 045-475-1385 **SAMTEC CHINA** • Tel: 86-21-61103766 **SAMTEC TAIWAN** • Tel: 886-2-2735-6109
SAMTEC HONG KONG • Tel: 852-26904858 **SAMTEC KOREA** • Tel: 82-31-717-5685 **SAMTEC ANZ** • Tel: 613 9512 7747 **SAMTEC SOUTH AFRICA** • Tel: 27 11 452 8112