THIS DRAWING IS UNPUBLISHED. RELEASED FOR PUBLICATION -,- .
© COPYRIGHT - By - ALL RIGHTS RESERVED.

REVISIONS

P	LTR	DESCRIPTION	DATE	DWN	APVD
	A	REVISED PER ECO-15-002073	06MAY2015	NK	MZ
	B	REVISED PER ECR-16-016563	07DEC2016	RS	MZ

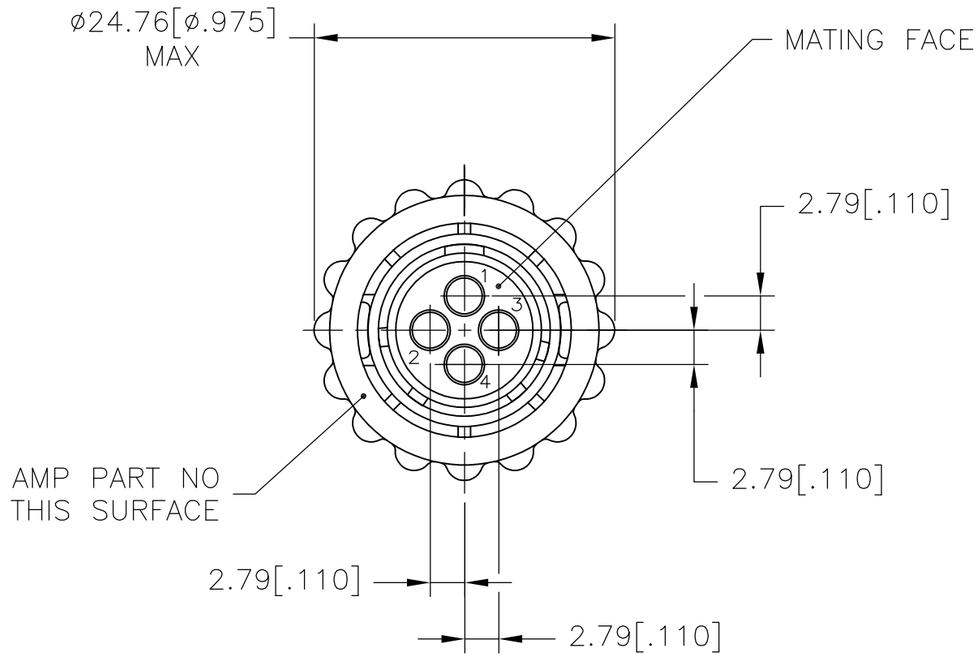

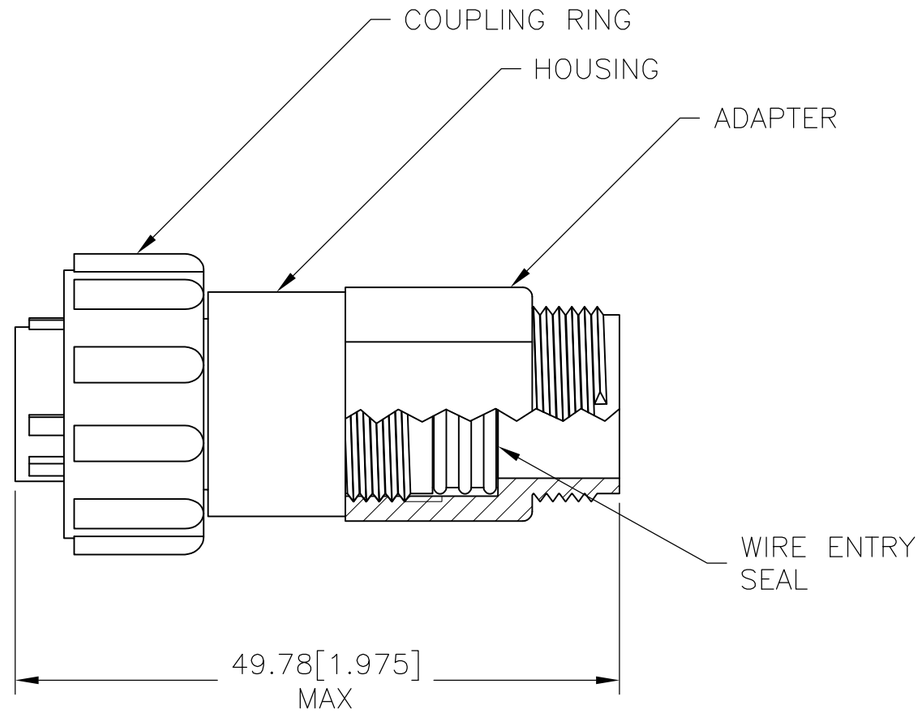

1. HOUSING, COUPLING RING & ADAPTER: NYLON 6/6, BLACK.
   WIRE ENTRY SEAL: ELASTOMER, RED.
2. THIS CONNECTOR WILL ACCEPT FOUR (4) MULTIMATE PIN CONTACTS.
3. SPECIAL PACKAGING CONSISTING OF 20 CONNECTORS PER BAG, 5 BAGS PER SHIPPER BOX.

3 OBSOLETE	~~788153-3~~
	788153-2
	PART NUMBER

THIS DRAWING IS A CONTROLLED DOCUMENT.

DIMENSIONS: mm [INCHES]

TOLERANCES UNLESS OTHERWISE SPECIFIED:
0 PLC ± -
1 PLC ± -
2 PLC ± 0.13[.005]
3 PLC ± -
4 PLC ± -
ANGLES ± -

MATERIAL 1

FINISH -

DWN P.BENNINGHOVE 01 OCT 97
CHK K.DOWHOWER 28 OCT 99
APVD K.DOWHOWER 28 OCT 99
PRODUCT SPEC 108-1579
APPLICATION SPEC 114-10038
WEIGHT -

TE Connectivity

NAME PLUG ASSEMBLY, 11-4, REVERSE SEX, SERIES I, SEALED, CPC

SIZE	CAGE CODE	DRAWING NO	RESTRICTED TO
A3	00779	C-788153	-

CUSTOMER DRAWING | SCALE 2:1 | SHEET 1 OF 1 | REV B