REV.	DESCRIPTION	DATE
A	RELEASE	2012.11.12

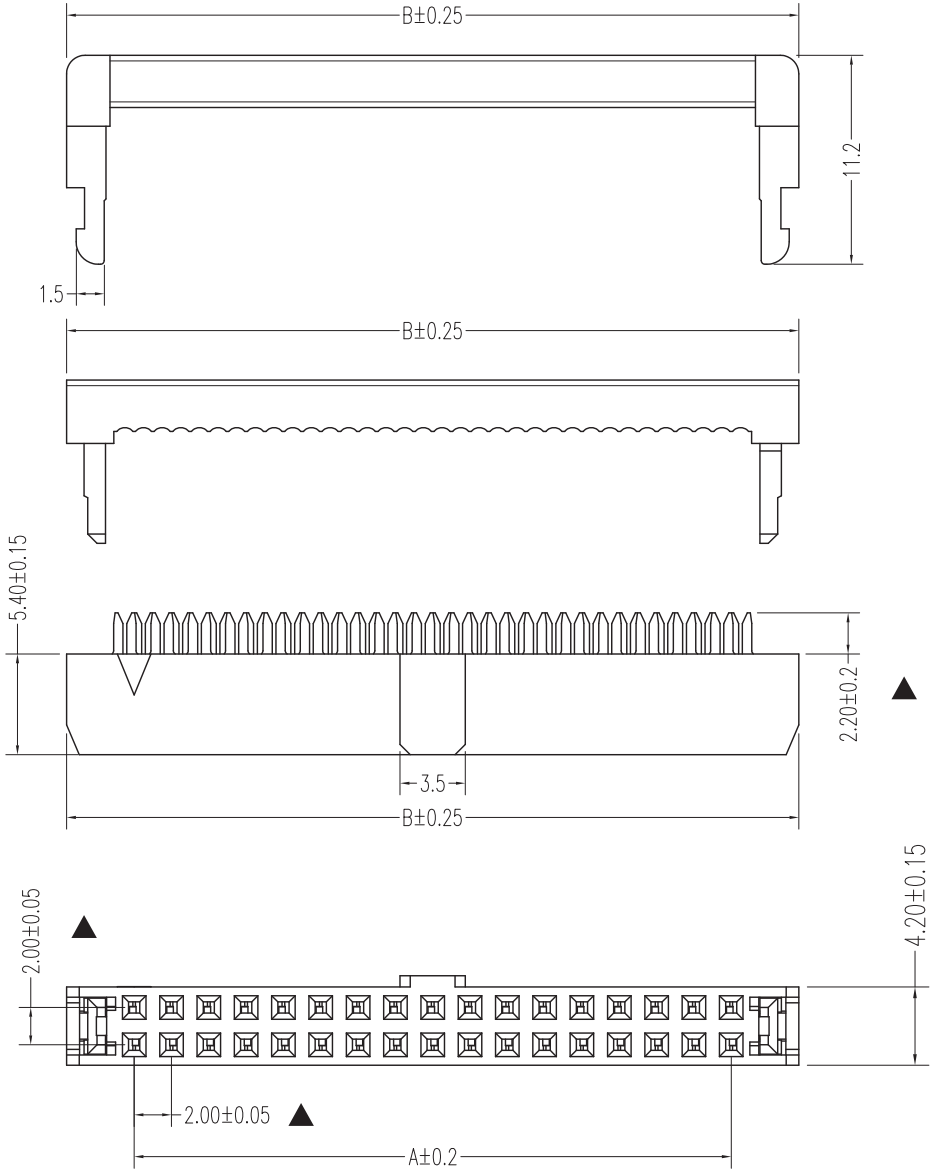

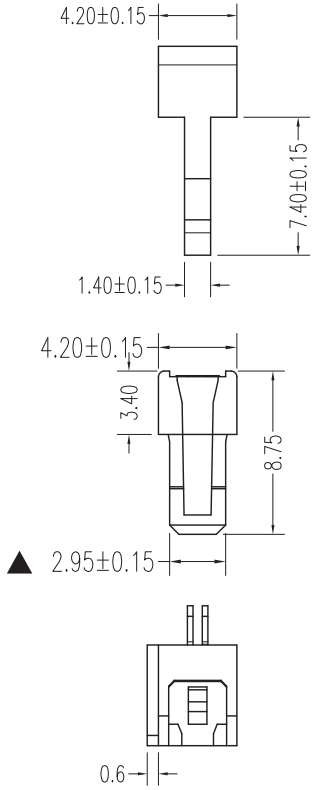

RoHS

NOTES:
Insulator Material: PBT, UL 94V-0
Contact Plating: Nickel 50μ"
Contact Material: Brass

Current Rating : 1A AC,DC
Contact Resistance: 20MΩ Max.
Dielectric Withstanding: AC 500V
Insulator Resistance: 1000MΩ Min.
Operating Temp.: -40°C~+105°C

NUMBER OF POSITIONS	DIMENSION	
	A	B
06	4.0	11.2
08	6.0	13.2
10	8.0	15.2
12	10.0	17.2
14	12.0	19.2
16	14.0	21.2
18	16.0	23.2
20	18.0	25.2
22	20.0	27.2
24	22.0	29.2
26	24.0	31.2
28	26.0	33.2
30	28.0	35.2
34	32.0	39.2
36	34.0	41.2
40	38.0	45.2
44	42.0	49.2
50	48.0	55.2

Mating Part Number		
3120-ALL	3110-XX-001-11-XX	3110-XX-001-13-XX
3110-XX-002-13-XX	3110-XX-003-13-XX	

UNLESS TOLERANCE			
GENERAL		ANGLE	
X.	± 0.30	X.°	± 3.0°
.X	± 0.20	.X°	± 2.0°
.XX	± 0.15	.XX°	± 1.0°
.XXX	± 0.10	.XXX°	± 0.5°

DRAW BY	
DESIGN BY	
CHECK BY	
APPROVE BY	

SCALE	SHEET	UNIT
1:1	1/1	MM

CnC Tech,LLC

Part NO.
3130-XX-0103-99

DRW NO:

REV: A