THIS DRAWING IS UNPUBLISHED. RELEASED FOR PUBLICATION -,- .
© COPYRIGHT - By - ALL RIGHTS RESERVED.

REVISIONS

P	LTR	DESCRIPTION	DATE	DWN	APVD
	AB	REV PER ECO 17-000132	5-5-17	CT	DM

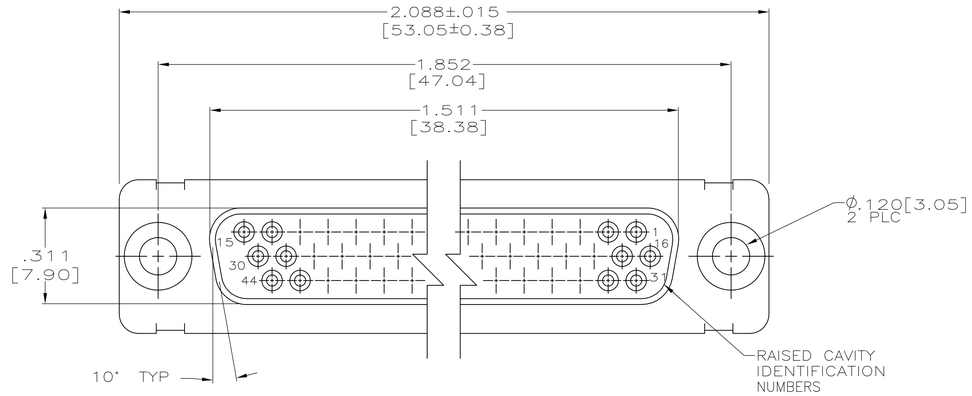

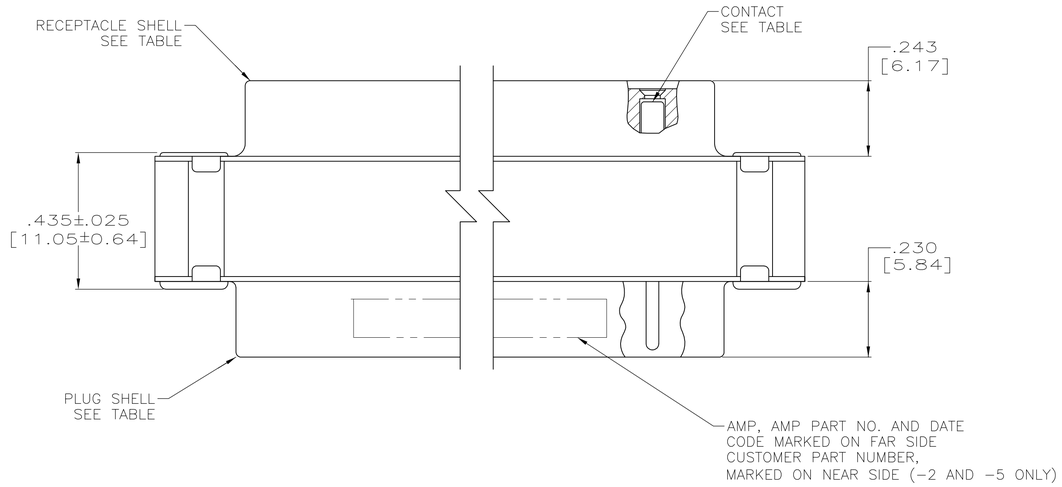

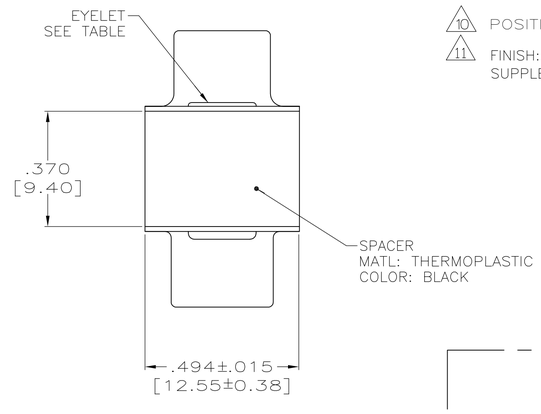

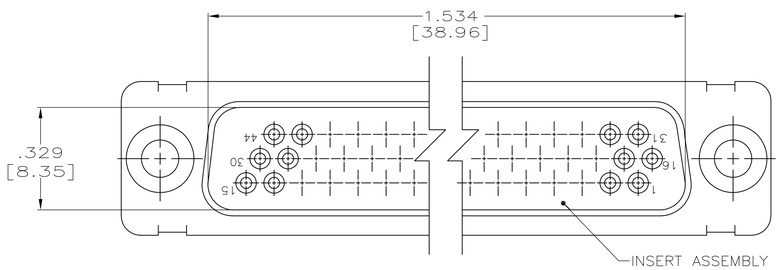

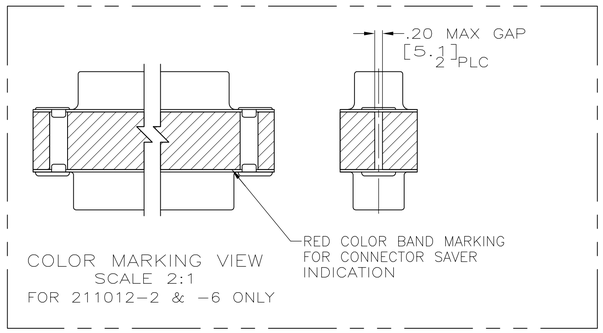

1. CONTACTS INCLUDED IN ASSEMBLY.
2. MATL: STEEL, PER ASTM-A-109.
3. FINISH: CADIUM PER QQ-P-416.
4. MATL: BRASS PER ASTM-B-36.
5. FINISH: PLATED ZINC .00020 MIN THK PER ASTM-B-633. YELLOW CHROMATE FINISH.
6. CONTACT
   BODY MAT'L: BERYLLIUM COPPER PER ASTM-B-197.
   BODY FINISH: PLATED GOLD, .000050 MIN THK PER MIL-G-45204 OVER NICKEL, .000050 MIN THK PER QQ-N-290.
   HOOD MAT'L: STAINLESS STEEL PER ASTM-A-240.
   HOOD FINISH: PASSIVATED PER QQ-P-35
7. FINISH: PLATED GOLD, .000050 MIN THK PER MIL-G-45204 OVER COPPER FLASH
8. FINISH: PLATED GOLD, .000050 MIN THK PER MIL-G-45204 OVER COPPER, .000100 MIN THK PER MIL-C-14550.
9. CONTACT
   BODY MAT'L: BERYLLIUM COPPER PER ASTM-B-197.
   BODY FINISH: PLATED GOLD, .000050 MIN THK PER MIL-G-45204 OVER COPPER, .000100 MIN THK PER MIL-C-14550.
   HOOD MAT'L: COPPER ALLOY PER QQ-B-613.
   FINISH: PLATED GOLD, .000050 MIN THK PER MIL-G-45204 OVER COPPER, .000100 MIN THK PER MIL-C-14550.
10. POSITIONS 37 & 38 DO NOT HAVE A CONTACT OR CLIP LOADED.
11. FINISH: PLATED ZINC PER ASTM-B-633 .000200 MIN THK WITH SUPPLEMENTARY CHROMATE (Cr3+).

	CONTACT	EYELET	SHELLS	CONTACT	CUSTOMER P/N	PART NO.
	10	4 11	2 11	6	–	5-211012-7
	10	4 5	2 3	6	–	211012-7
	–	4 8	4 7	6	4U884 SOCN R10002677-0108	211012-6
	–	4 8	4 7	6	2A091-003W-001	211012-5
	–	4 8	4 7	9	–	211012-4
OBSOLETE	–	–	–	–	–	211012-3
	–	4 8	4 7	6	(1J02-108)	211012-2
	–	4 5	2 3	6	–	211012-1

THIS DRAWING IS A CONTROLLED DOCUMENT.

DIMENSIONS: INCHES

TOLERANCES UNLESS OTHERWISE SPECIFIED:
0 PLC ± –
1 PLC ± –
2 PLC ± –
3 PLC ± .005 [0.13]
4 PLC ± –
ANGLES ± –

MATERIAL –
FINISH –

DWN C.C.THOMAS 11-3-98
CHK J.NORTON 11-17-98
APVD J.NORTON 11-17-98
PRODUCT SPEC –
APPLICATION SPEC –
WEIGHT 0.000000

TE Connectivity

NAME CONNECTOR SAVER,AMPLIMITE 44 POSN.,SIZE 3,SERIES 90 –

SIZE	CAGE CODE	DRAWING NO	RESTRICTED TO
A1	00779	C-211012	–

CUSTOMER DRAWING SCALE 4:1 SHEET 1 OF 1 REV AB