Alle Rechte vorbehalten/ *All rights reserved*

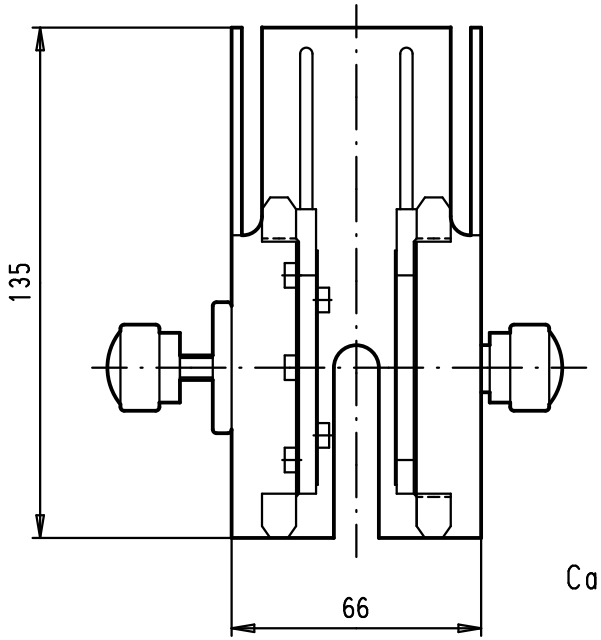

Cable aligner

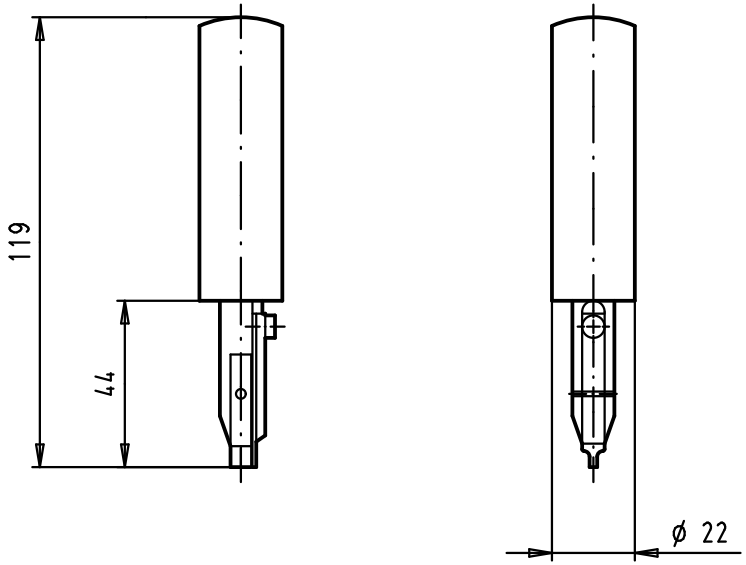

Press cutter

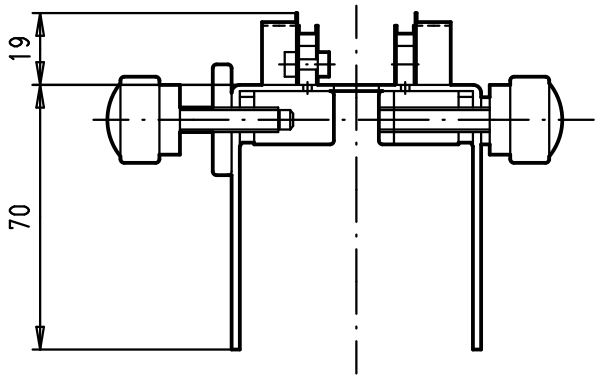

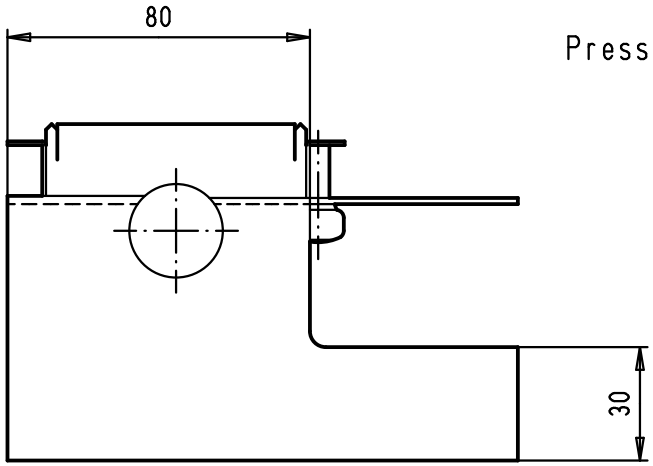

				Dat.	Name			
			Detail.	28/08/08	PK	All Dim. in mm Orig. Size DIN A 4	Har-mik tools: Hand cable aligner for male bellows connector and press cutter	Maßstab/ *Scale* 1:2
			Insp.					
			Stand.					
35278	28/08/08	PK	HARTING EURL F-95972 Paris				TB 60 99 000 0017	Blatt/ *Page* 1/1
Mod.	Dat.	Name					Sub.	