REVISIONS			
REV	DESCRIPTION	DATE	APPROVED
01_4	REVISED	10/24/97	Tlbag

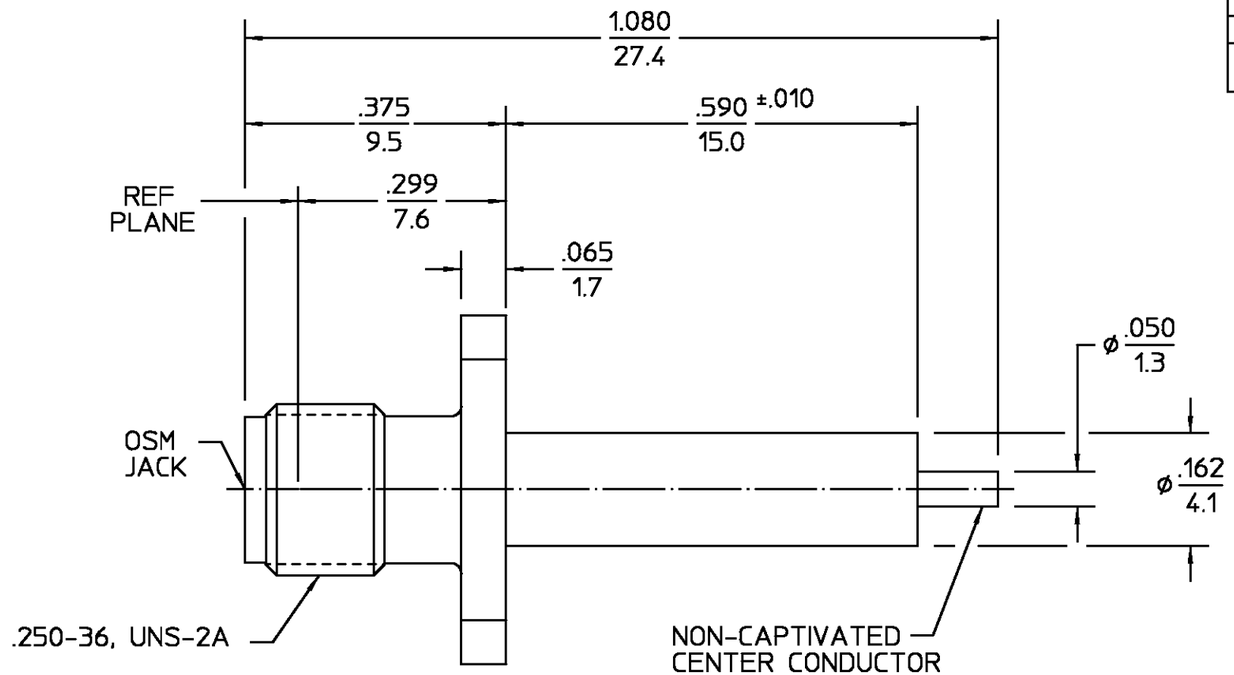

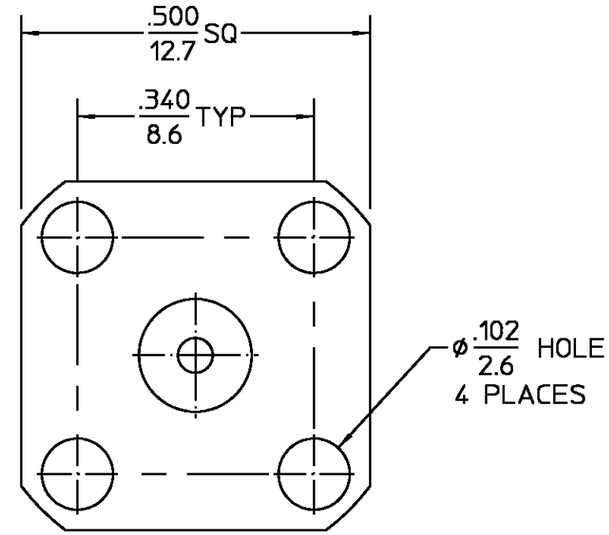

ELECTRICAL	MECHANICAL	ENVIRONMENTAL
Nominal Impedance (Ohms) 50	Interface Dimensions MIL-STD-348, Fig. 310-2	Temperature Rating -65°C To 165°C
Frequency Range (GHz) DC to 18	Recommended Mating Torque 7-10 In-Lbs	Vibration MIL-STD-202, Method 204 204, Condition D.
Volt Rating (VRMS MAX) @ Sea Level 335	Mating Characteristics: Insertion (MAX Lbs) 2.0	Shock MIL-STD-202, Method 213, Condition I.
VSWR 1.03 + .004f (GHz)	Withdrawal (MIN Oz) 1.0	Thermal Shock MIL-STD-202, Method 107, Condition B
Insertion Loss (dB MAX) $.03\sqrt{f(GHz)}$	Force to Engage and Disengage (In/Lbs MAX) 2.0	Moisture Resistance MIL-STD-202, Method 106, Except Vibration Shall Be Omitted
RF Leakage (dB MIN) -[100-f(GHz)]	Center Contact Captivation Axial (Lbs) N/A	Corrosion - MIL-STD-202, Method 101, Condition B, 5% salt spray
Corona, 70,000 Ft (VRMS MIN) 250	Radial (In/Oz) N/A	
Dielectric Withstanding Voltage (VRMS MIN) @ Sea Level 1,000	Weight (Grams) TBD	
Contact Resistance (Milliohms MAX) Center Contact 2.0		
Outer Contact 2.0		
Cable to Housing N/A		
RF High Potential @ Sea Level (VRMS MIN @ 5 MHz) 670		
I.R.(Megohms MIN) 10,000		

.XXX = in
XX.X = mm

COMPONENT	MATERIAL	FINISH
HOUSING	STAINLESS STEEL PER ASTM-A484 AND ASTM-A582, TYPE 303	GOLD PLATE PER MIL-G-45204
DIELECTRIC	TFE FLUOROCARBON PER ASTM-D-1457	N/A
CENTER CONTACT	BERYLLIUM COPPER PER ASTM-B 196, ALLOY C17300, CONDITION H	GOLD PLATE PER MIL-G-45204

UNLESS OTHERWISE SPECIFIED DIMENSIONS ARE IN INCHES
TOLERANCE ON
FRAC. ± 1/64 DEC. ±.005 ANGLES ± 1°

		DATE
DRAWN BY	BWC	6/6/67
CHECKED BY	PRB	7/5/68
APP'D BY		7/3/68

AMP

AMP Incorporated
140 Fourth Avenue
Waltham, MA 02451-7599

These drawings and specifications are the property of M/A-COM Interconnect Division and shall not be reproduced or copied or used in whole or in part as the basis for the manufacture or sale of item(s) without written permission.

USE ASS'Y PROCEDURE

NO. A.P. N/A

TITLE OSM 4 HOLE FLANGE MOUNT JACK RECEPTACLE STRAIGHT TERMINAL

SIZE	CODE IDENT NO.		REV
B	26805	2052-1200-00	01_4
SCALE 5:1			SHEET 1 OF 1

CUSTOMER DRAWING

AMP PART # 1052517-1
SHEET 1 OF 1 REV A