THIS DRAWING IS UNPUBLISHED. RELEASED FOR PUBLICATION -,- .
© COPYRIGHT - By - ALL RIGHTS RESERVED.

LOC	DIST
AF	50

REVISIONS

P	LTR	DESCRIPTION	DATE	DWN	APVD
	M	REVISED PER ECR-12-013445	18OCT12	KH	PD

1 SUPPLIED IN LOOSE PIECE

2 WIRE BARREL IS PRE-CRIMPED

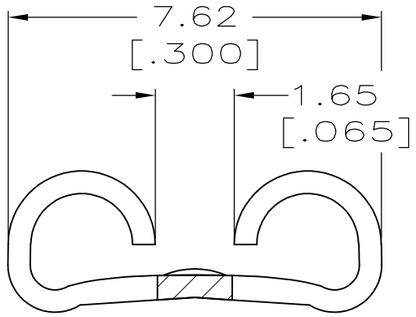

VIEW A–A
SCALE 8:1

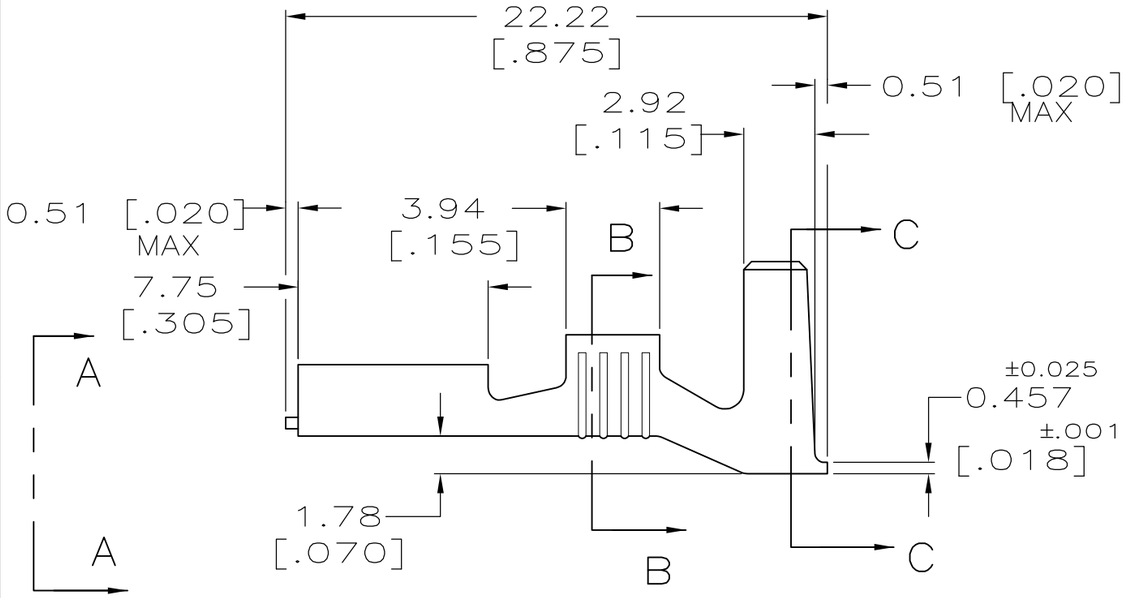

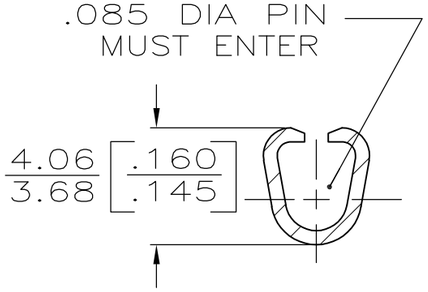

SECTION B–B
SCALE 5:1

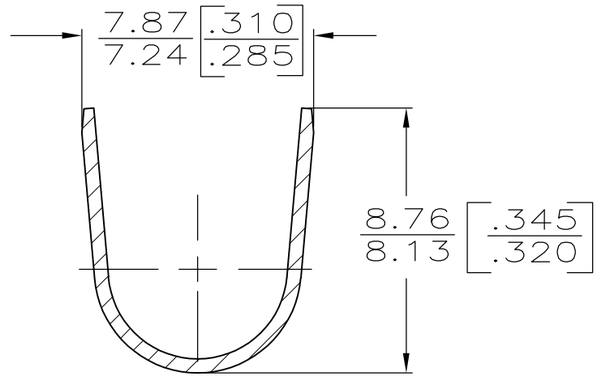

SECTION C–C
SCALE 5:1

5.33–6.73 or (2) 3.05 [.210–.265] or (2) [.120]	1.3–3.0mm² or (2) 0.8mm² [16–12] or (2) [#18's]	0.813 [.032]	42021
INSULATION RANGE	WIRE SIZE	MATING TAB THK ±0.025 [.001]	PART NO.

F	7.62 [.300]	6.4 [.252]	F	3.05 [.120]	2.413[.095]	3.0mm²[12]
					2.083[.082]	2.0mm²[14]
					1.880[.074]	1.3mm²[16]
TYPE	WIDTH	STRIP LENGTH ±0.38 ±[.015]	TYPE	WIDTH	±.051[±.002] HEIGHT	WIRE
INSUL BARREL CRIMP			WIRE BARREL CRIMP			

THIS DRAWING IS A CONTROLLED DOCUMENT.

DIMENSIONS: mm [INCHES]

TOLERANCES UNLESS OTHERWISE SPECIFIED:
0 PLC ± –
1 PLC ± –
2 PLC ± –
3 PLC ± 0.38 [.015]
4 PLC ± –
ANGLES ± –

MATERIAL: BRASS
FINISH: TIN

DWN	JR RUTH	6/25/97
CHK	MS FEHER	6/25/97
APVD	P DESANTIS	6/25/97
PRODUCT SPEC	—	
APPLICATION SPEC	114-2036	
WEIGHT	—	

TE Connectivity

NAME: RECEPTACLE, FASTON,™ .250 SERIES

SIZE	CAGE CODE	DRAWING NO	RESTRICTED TO
A3	00779	C-42021	—

CUSTOMER DRAWING | SCALE 4:1 | SHEET 1 OF 1 | REV M

1470-19 (3/11)