0.8mm Pitch

Connectors

# HDRA series

## 0.8 mm Pitch Connectors

## Outline

HDRA series connectors have been developed based on the HDR series products for high speed signal interfaces such as SCSI-III, VHDCI and PCI.

## Features

- Conforms to the United States ANSI/SFF8441 standards
- Provided with high performance EMI/ESD-shielded structure
- Mounted with locks or screws
- Low profile
- Sequence structure

## Principal Applications

Server, Router, Notebook type personal computers and their peripheral equipment, and mobile equipment

## Electrical Characteristics

| | |
|---|---|
| Rated voltage | 30V AC (r.m.s.) |
| Rated current | 0.3 A |
| Insulation resistance | Over 500 megohms at 100V DC |
| Dielectric withstanding voltage | 250V AC (r.m.s.) |
| Contact resistance | 70 milliohms or less (for combination of MA or MA1 and LFDT) 100 milliohms or less (for combination with MA1 and W1LFDT) |

**Document Disclaimer**

- When placing orders with us, minimum order quantities are set for every product.
- Be sure to contact us before starting preliminary design of PCBs using our connectors.
- The specifications and information shown in the catalog are subject to change without notice.

## Reflow temperature profile (for reference purposes)

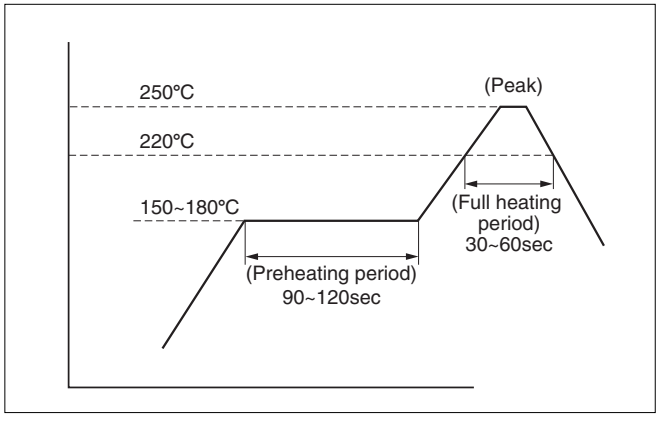


The reflow temperature profile shown in this drawing is for reference purposes. This profile depends on requirements such as reflow equipment, soldering paste, and PCB size. Thus, this profile may not meet with your specific situation. Please evaluate your PCB-mounting soldering and set your own reflow temperature profile.

### ●Applicable products

**HDRA series SMT type for PCB**

The profile shown in this drawing is applicable only for those products shown above.

## Flow temperature profile (for reference purposes)

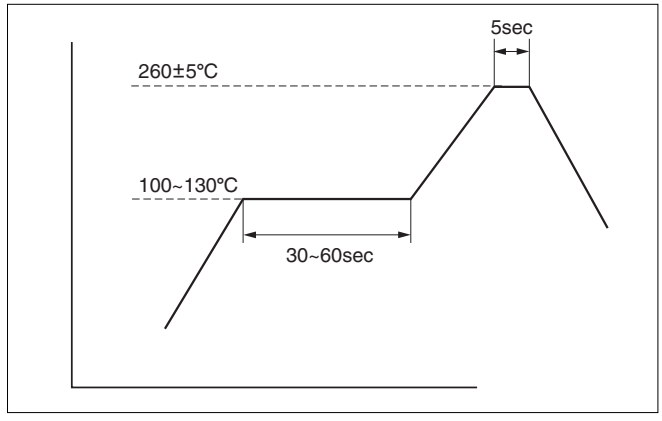


The flow temperature profile as shown above is for reference purposes. This profile depends on requirements such as the PCB size. Thus, this profile may not meet with your specific situation. Please evaluate your PCB-mounting soldering and set your own flow temperature profile.

### ●Applicable products

**HDRA series through hole type for PCB**

The profile shown in this drawing is applicable only for those products shown above.

## Product List

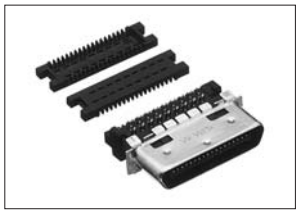

IDC type male connector for cable
HDRA-E36MA+

**A-22**
HDRA series...6

IDC type male connector for cable
HDRA-E68MA+

**A-23**
HDRA series...7

IDC type male connector for cable
HDRA-E68M( )1+

**A-24**
HDRA series...8

IDC type male connector for cable
HDRA-E100M( )1+

**A-25**
HDRA series...9

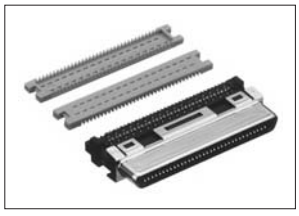

IDC type female connector for cable
HDRA-E68FAG1+

**A-26**
HDRA series...10

Straddle SMT type male connector for PCB
HDRA-E68MT+

**A-27**
HDRA series...11

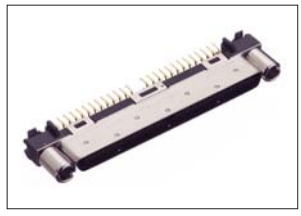

Straight through hole type male connector for PCB
HDRA-EC100MDT-( )+

**A-28**
HDRA series...12

Straight through hole type female connector for PCB
HDRA-EC68FDT+

**A-29**
HDRA series...13

Straight through hole type female connector for PCB
HDRA-EC100FDT+

**A-30**
HDRA series...14

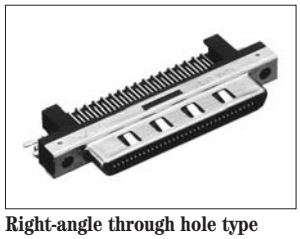

Right-angle through hole type female connector for PCB
HDRA-E68LFDT-OM18+

**A-31**
HDRA series...15

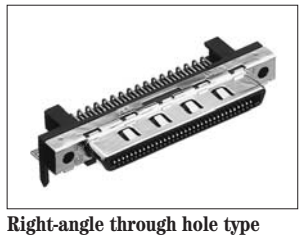

Right-angle through hole type female connector for PCB
HDRA-E68LFD1T-( )+

**A-32**
HDRA series...16

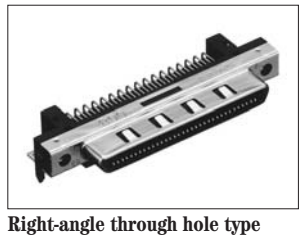

Right-angle through hole type female connector for PCB
HDRA-EC68LFDT( )-( )+

**A-33**
HDRA series...17

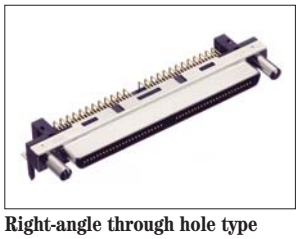

Right-angle through hole type female connector for PCB
HDRA-EC100LFDT( )-( )+

**A-34**
HDRA series...18

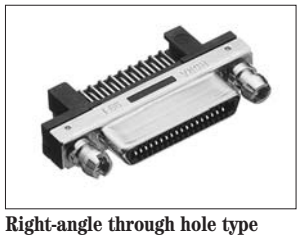

Right-angle through hole type female connector for PCB
HDRA-EA36LFDT-( )+

**A-35**
HDRA series...19

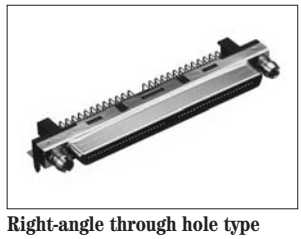

Right-angle through hole type female connector for PCB
HDRA-E100LFDT( )-( )+

**A-36**
HDRA series...20

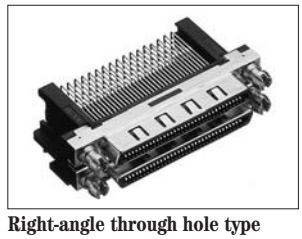

Right-angle through hole type female connector for PCB
HDRA-E68W1LFDT-( )+

**A-37**
HDRA series...21

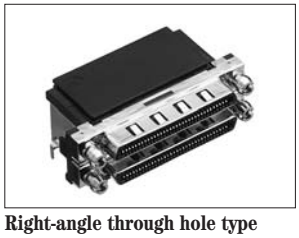

Right-angle through hole type female connector for PCB
HDRA-E68W( )LFDT1EC-( )+

**A-38**
HDRA series...22

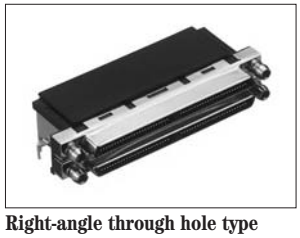

Right-angle through hole type female connector for PCB
HDRA-E100W( )LFDT1EC-( )+

**A-39**
HDRA series...23

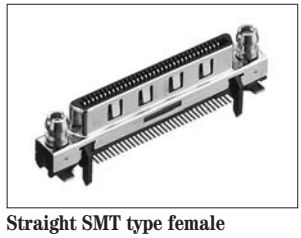

Straight SMT type female connector for PCB
HDRA-E68FYT-( )+

**A-40**
HDRA series...24

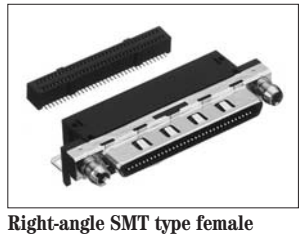

Right-angle SMT type female connector for PCB
HDRA-ED68LFZGT( )-( )+

**A-41**
HDRA series...25

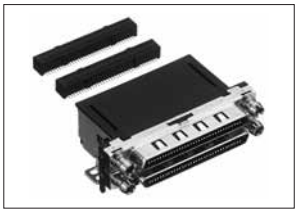

**Right-angle SMT type female connector for PCB**
**HDRA-ED136LFZGT( )-( )+**

**A-48**
HDRA series...26

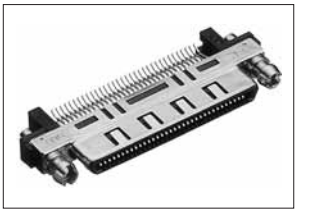

**Straddle SMT type female connector for PCB**
**HDRA-E68FT+**

**A-49**
HDRA series...27

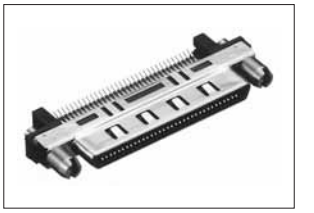

**Straddle SMT type female connector for PCB**
**HDRA-E68FT2-( )+**

**A-50**
HDRA series...28

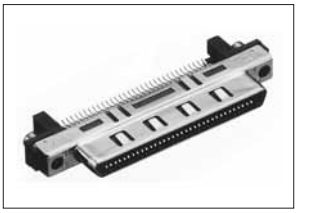

**Straddle SMT type female connector for PCB**
**HDRA-E68FT2-OM06+**

**A-51**
HDRA series...29

**Straddle SMT type female connector for PCB**
**HDRA-EA36FT-NS+**

**A-52**
HDRA series...30

**EMI-shielded vertical plastic housing for standard cable**
**HDRA-E68LGKP( )**

**A-53**
HDRA series...31

**EMI-filtered vertical metallic housing**
**HDRA-E100LPA**

**A-54**
HDRA series...32

**EMI-filtered vertical metallic housing**
**HDRA-E100LPW( )**

**A-55**
HDRA series...33

**EMI-shielded vertical plastic housing**
**HDRA-E36LPTH**

**A-56**
HDRA series...34

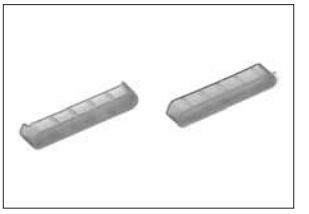

**Dust-proof cap**
**HDRA-E68( )-CP**

**A-57**
HDRA series...35

HONDA TSUSHIN KOGYO CO., LTD.

# IDC type male connector for cable
# HDRA-E36MA+

RoHS

**0.8mm pitch connector**
**For cable**
**IDC**
**ANSI/SFF8441**

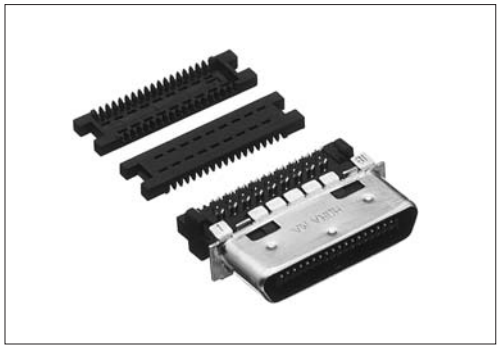

● **Configuration of product Part No.**

**HDRA- E 36 M A+**
① ② ③ ④

① Series name
② No. of contacts: 36
③ Type of contact
M: IDC type, male
④ Compatible cable
A: AWG#30(7/0.1), dia. 0.58 mm

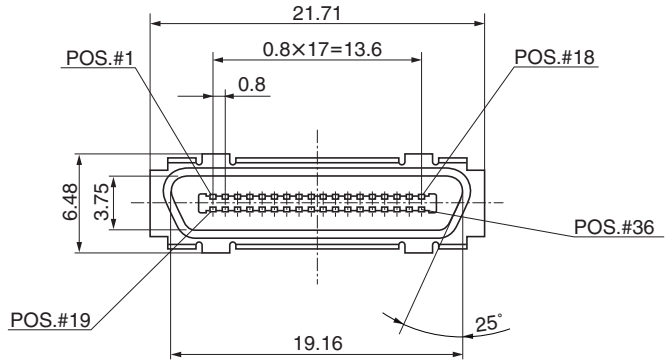


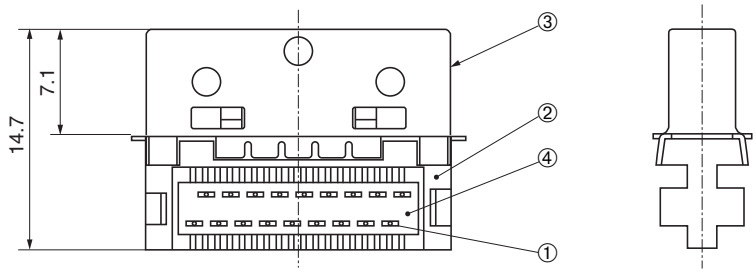


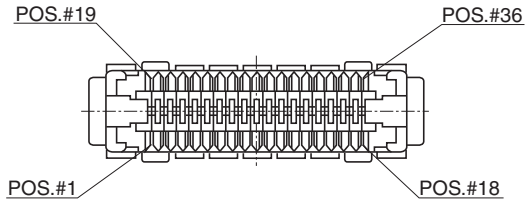


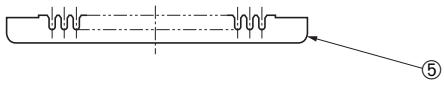


● **Components**

| | |
|---|---|
| ① | Contacts |
| ② | Insulator |
| ③ | Shell |
| ④ | Spacer |
| ⑤ | Cable housing |

**Mating connector**: HDRA series right-angle through hole type or straddle SMT type female connector

**For use with housings**: HDRA series upright housing, HDRA-E36LPTH

Through hole | SMT | Press-in | IDC | Soldering | Crimping | Wire wrapping | Others

# IDC type male connector for cable
# HDRA-E68MA+

RoHS

**0.8mm pitch connector**
**For cable**
**IDC**
**ANSI/SFF8441**

● **Configuration of product Part No.**

**HDRA- E 68 M A+**
① ② ③ ④

① Series name
② No. of contacts: 68
③ Type of contact
M: IDC type, male
④ Compatible cable
A: AWG#30 (7/0.1), dia. 0.58 mm

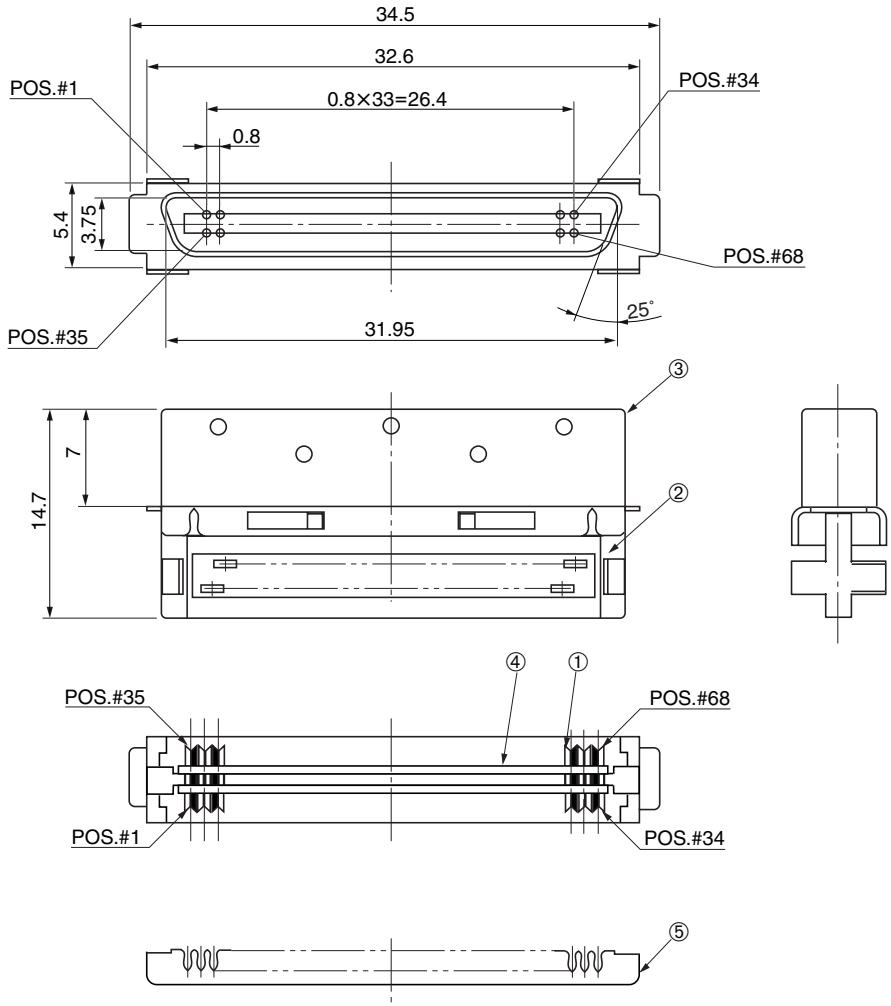


● **Components**

| | |
|---|---|
| ① | Contacts |
| ② | Insulator |
| ③ | Shell |
| ④ | Spacer |
| ⑤ | Cable housing |

**Mating connector**: HDRA series right-angle through hole type or straddle SMT type female connector

**For use with housings**: HDRA series upright housing, HDRA-E68LGKPA

# IDC type male connector for cable
# HDRA-E68M( )1+

RoHS

**0.8mm pitch connector**
**For cable**
**IDC**
**ANSI/SFF8441**

● **Configuration of product Part No.**

**HDRA- E 68 M ( ) 1+**
① ② ③ ④ ⑤

① Series name
② No. of contacts: 68
③ Type of contact
M: IDC type, male
④ Compatible cable
Blank: AWG#30 (1/0.254), dia. 0.58 mm
A : AWG#30 (7/0.1), dia. 0.58 mm
C : AWG#34 (7/0.064), dia. 0.44 mm
⑤ IDC method
1: One side IDC

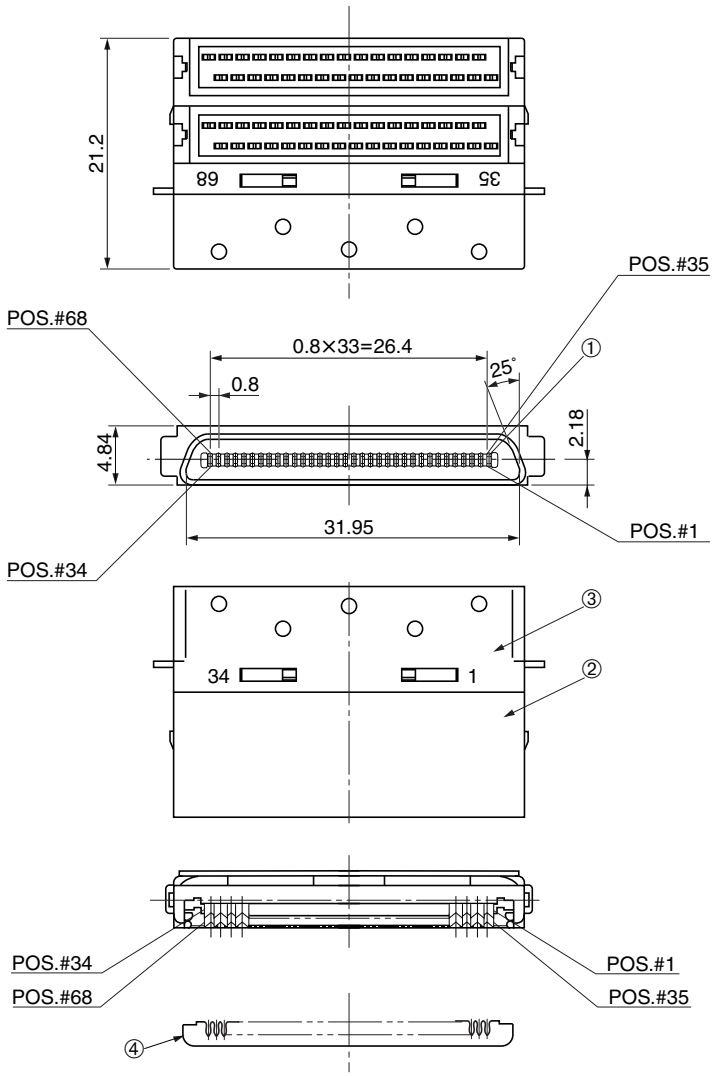


● **Components**

| | |
|---|---|
| ① | Contacts |
| ② | Insulator |
| ③ | Shell |
| ④ | Cable housing |

**Mating connector**: HDRA series right-angle through hole type or straddle SMT type female connector

**For use with housings**: HDRA series vertical housing, HDRA-E68LGKP ( )

**Required tool**: Termination tool: FHAT-0027, IDC tool: FLPT-0021A, Hand presser: RPS-K4 (Refer to page Tool-10)

# IDC type male connector for cable
# HDRA-E100M( )1+

RoHS

**0.8 mm pitch connector**
**For cable**
**IDC**
**ANSI/SFF8441**

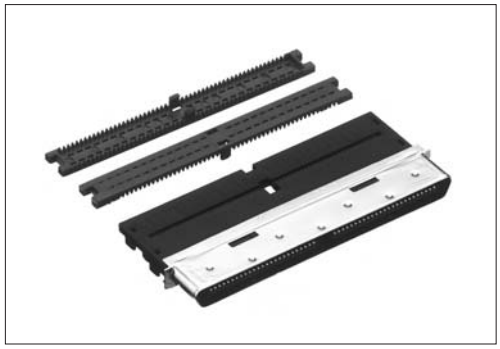

● **Configuration of product Part No.**

**HDRA- E 100 M ( ) 1+**
① ② ③ ④

① Series name
② No. of contacts: 100
③ Type of contact
M: IDC type, male
④ Compatible cable
Blank: AWG#30 (1/0.254), dia. 0.58 mm
A : AWG#30 (7/0.1), dia. 0.58 mm

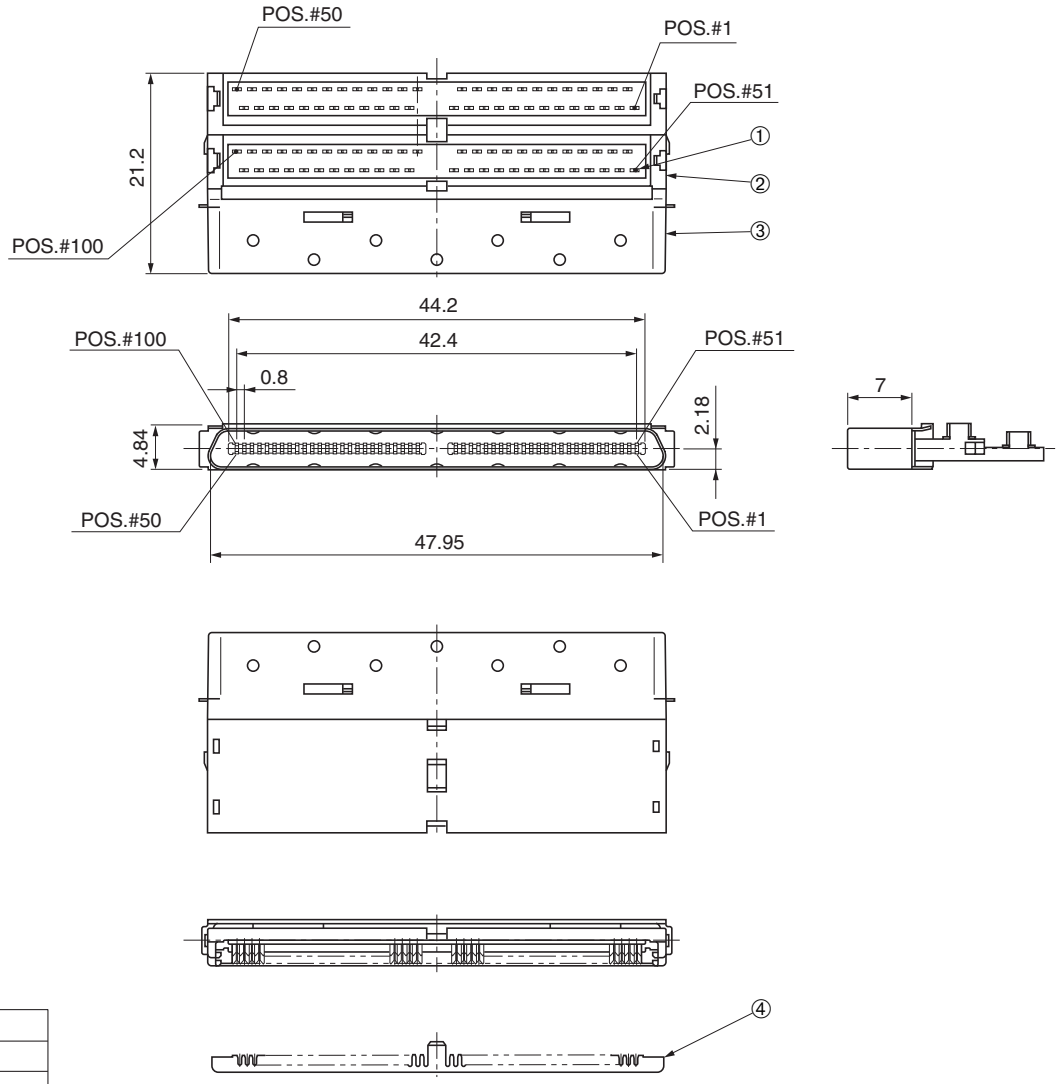


● **Components**

| | |
|---|---|
| ① | Contacts |
| ② | Insulator |
| ③ | Shell |
| ④ | Cable housing |

**Mating connector**: HDRA series right-angle through hole type female connector

**For use with housings**: HDRA series vertical housing, HDRA-E100LPA, HDRA-E100LPW( )

**Required tool**: Termination tool: FHAT-0038A, IDC tool: FLPT-0021A, Hand presser: RPS-K4 (Refer to page Tool-10)

HONDA TSUSHIN KOGYO CO., LTD.

**0.8 mm pitch connector**

**For cable**

**IDC**

**ANSI/SFF8441**

# IDC type female connector for cable
# HDRA-E68FAG1+

RoHS

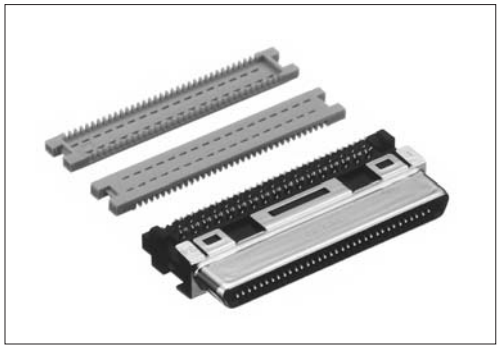

● **Configuration of product Part No.**

**HDRA- E 68 F A G1+**

① ② ③ ④ ⑤

① Series name
② No. of contacts: 68
③ Type of contact
F: IDC type, female
④ Compatible cable
A: AWG#30 (7/0.1), dia. 0.58 mm
⑤ Contact plating
G1: 0.76 μm or more Gold plate

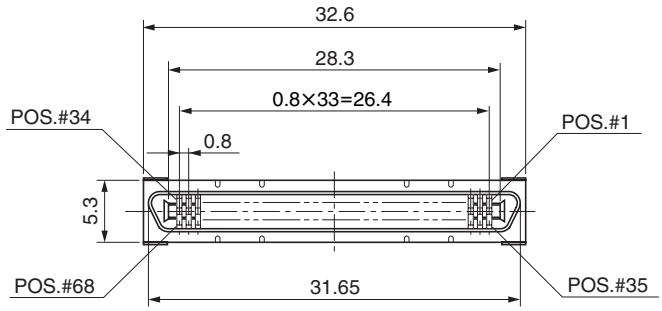


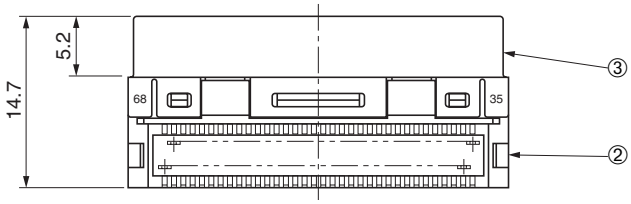


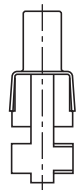

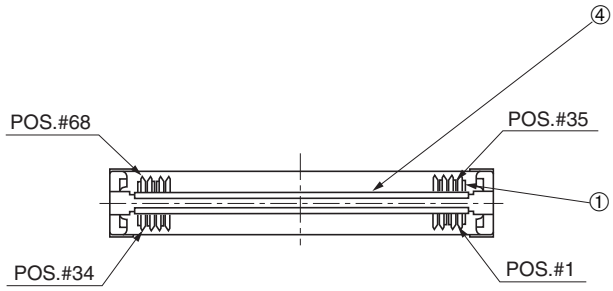


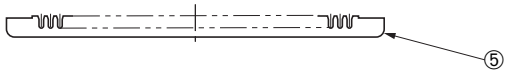


● **Components**

| | |
|---|---|
| ① | Contacts |
| ② | Insulator |
| ③ | Shell |
| ④ | Spacers |
| ⑤ | Cable housing |

**Mating connector**: HDRA series right-angle through hole type or straddle SMT type male connector

# Straddle SMT type male connector for PCB
# HDRA-E68MT+

RoHS

**0.8mm pitch connector**
**For PCB**
**Straddle SMT**
**ANSI/SFF8441**

● **Configuration of product Part No.**

**HDRA- E 68 MT+**
① ② ③

① Series name
② No. of contacts: 68
③ Type of contact
MT: Straddle SMT type, male

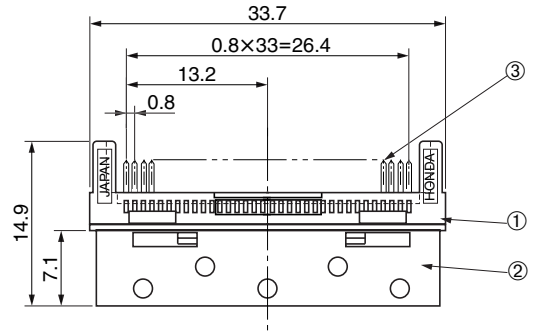


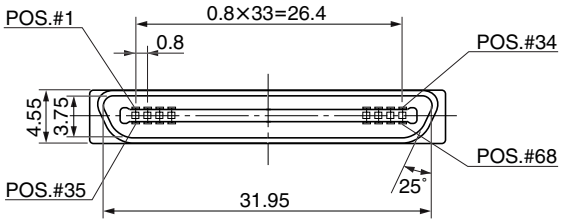


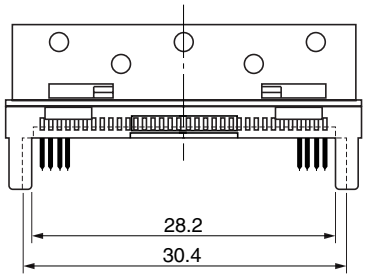


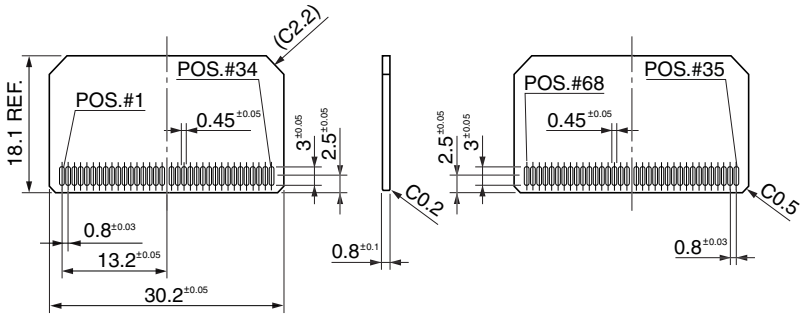


**Recommended PCB layout**
**t=0.8mm**

● **Components**

| | |
|---|---|
| ① | Insulator |
| ② | Shell |
| ③ | Contacts |

**Mating connector**: HDRA series through hole type or straddle SMT type female connector

HONDA TSUSHIN KOGYO CO., LTD.

**0.8mm pitch connector**
**For PCB**
**Straight Through hole**
**EMI shielded**

# Straight through hole type male connector for PCB
# HDRA-EC100MDT-( )+

RoHS

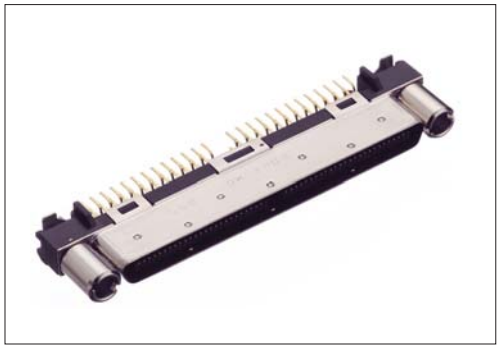

● **Configuration of product Part No.**

**HDRA- EC 100 MD T- ( )+**
① ② ③ ④ ⑤

① Series name
② No. of contacts: 100
③ Type of contact
MD: Straight through hole type, male
④ With ground contact
Blank: None
GP : Provided with guide hardware.
(The guide pin is required for the mating connector.)
⑤ Presence of guide metal fittings

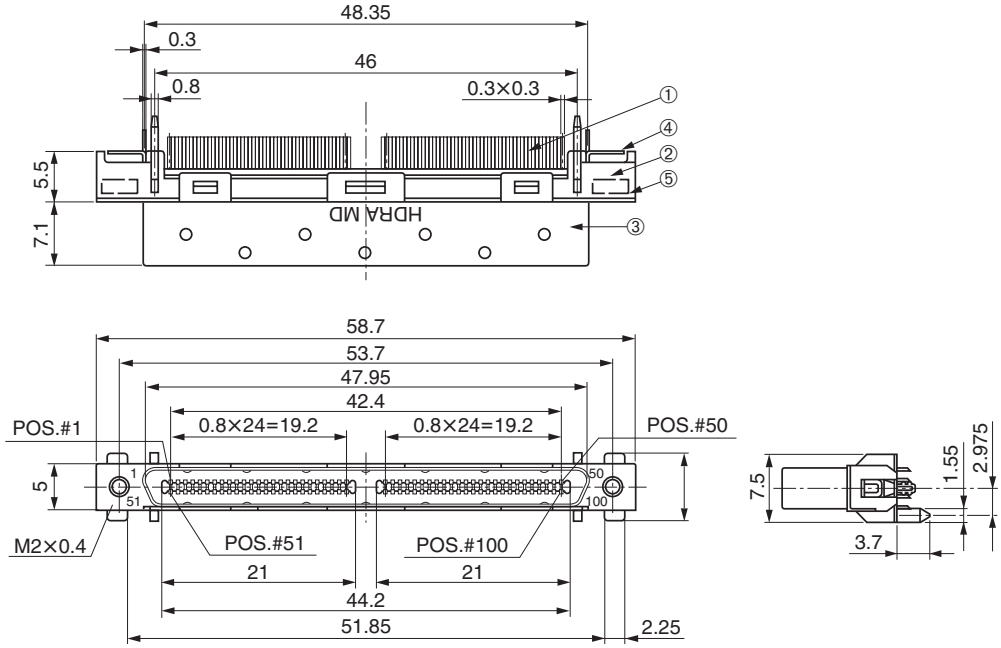


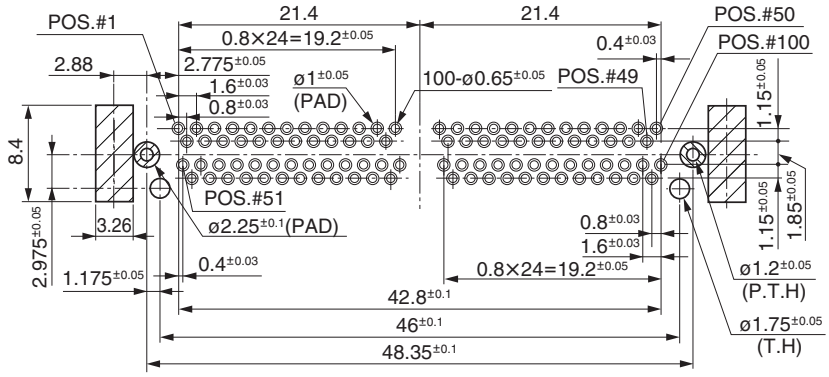


**Recommended PCB layout**
**t=1.6mm**

: PAD

● **Components**

| | |
|---|---|
| ① | Contacts |
| ② | Insulator |
| ③ | Shell |
| ④ | Hold down |
| ⑤ | Square nuts |

**Mating connector**: HDR series female connector

Through hole | SMT | Press-in | IDC | Soldering | Crimping | Wire wrapping | Others

# Straight through hole type female connector for PCB
# HDRA-EC68FDT+

RoHS

**0.8mm pitch connector**
**For PCB**
**Straight Through hole**
**EMI shielded**

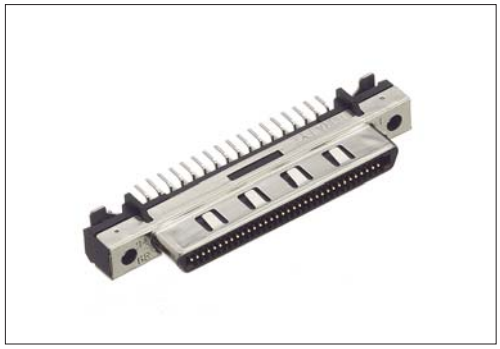

● **Configuration of product Part No.**

**HDRA- EC 68 FD T+**
① ② ③ ④

① Series name
② No. of contacts: 68
③ Type of contact
FD: Straight through hole type, female
④ With hold downs

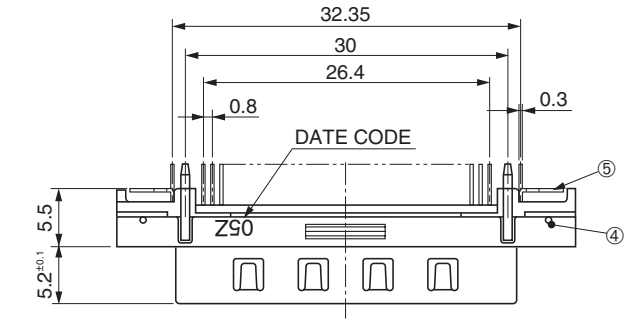


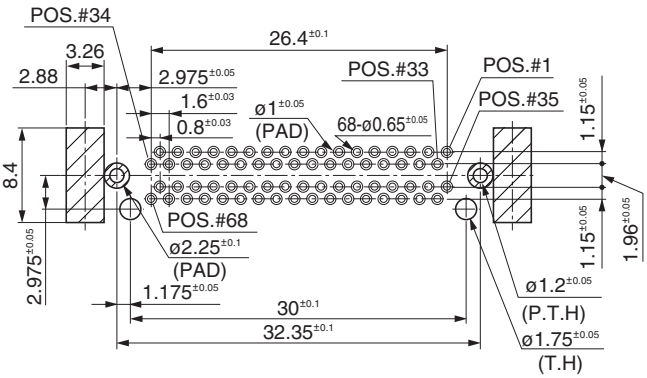


**Recommended PCB layout**
**t=1.6mm**

: PAD

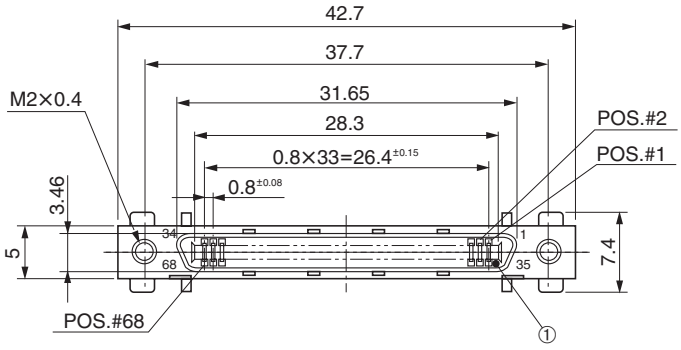


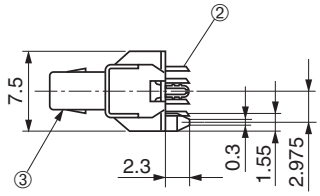


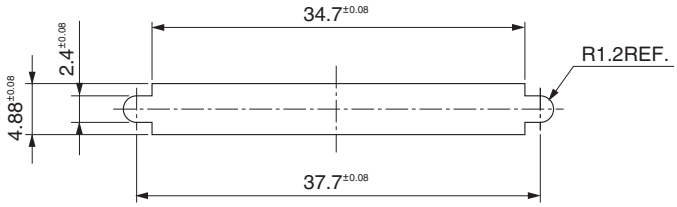


**Recommended panel cut-out dimensions**

Select the connector according to panel thickness.
For the application without panel, use washers or special lock screw (P/N: HDRA-E68LFD-7C).

**Mating connector**: HDRA series male connector

HONDA TSUSHIN KOGYO CO., LTD.

# Straight through hole type female connector for PCB
# HDRA-EC100FDT+

RoHS

**0.8mm pitch connector**
**For PCB**
**Straight Through hole**
**EMI shielded**

● **Configuration of product Part No.**

**HDRA- EC 100 FD T+**
① ② ③ ④

① Series name
② No. of contacts: 100
③ Type of contact
FD: Straight through hole type, female
④ With hold downs

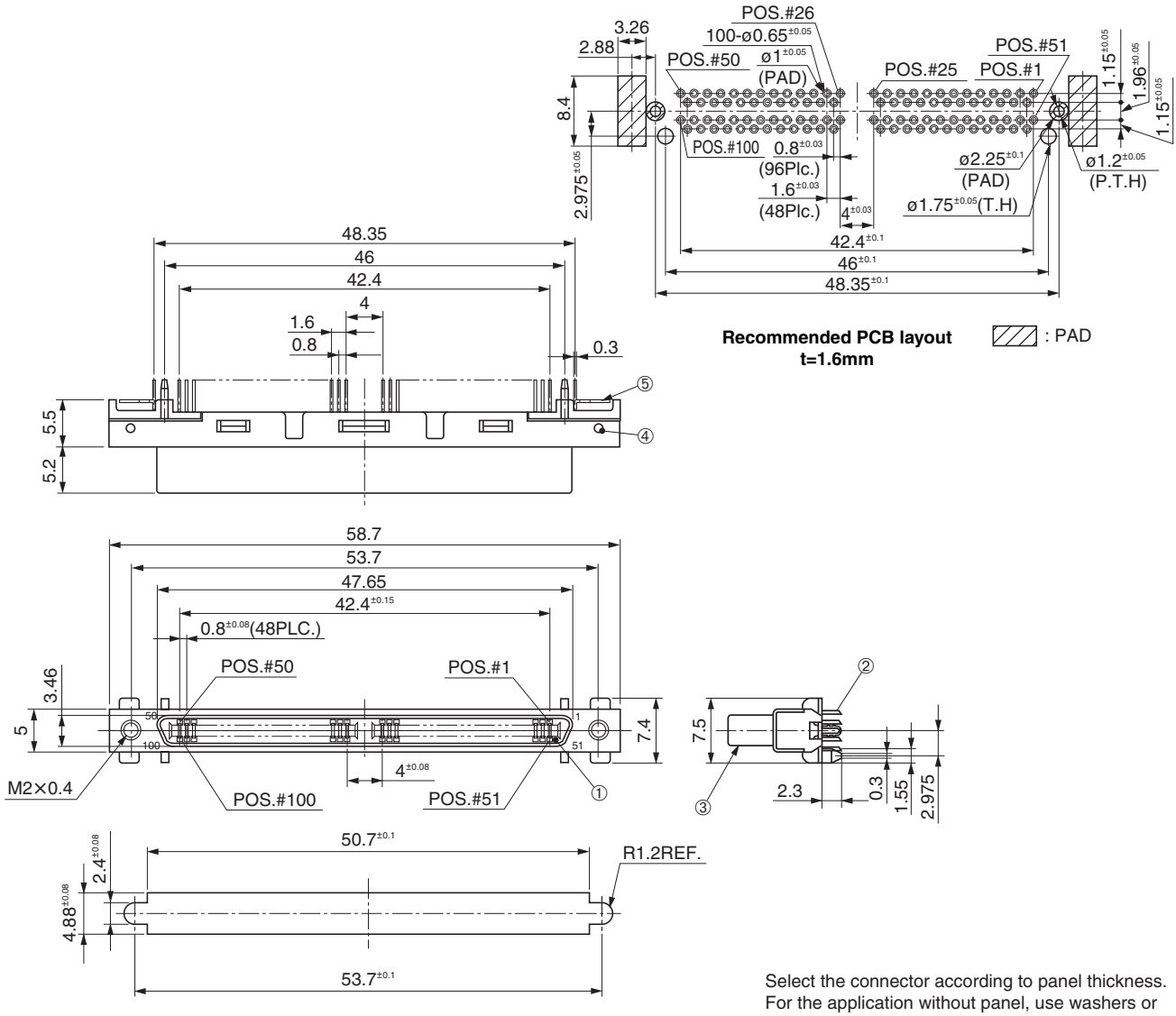


**Recommended PCB layout**
**t=1.6mm**

: PAD

**Recommended panel cut-out dimensions**

Select the connector according to panel thickness.
For the application without panel, use washers or special lock screw (P/N: HDRA-E68LFD-7C).

**Mating connector**: HDRA series male connector

Through hole | SMT | Press-in | IDC | Soldering | Crimping | Wire wrapping | Others

# Right-angle through hole type female connector for PCB
# HDRA-E68LFDT-OM18+

**0.8 mm pitch connector**
**For PCB**
**Right-angle Through hole**
**ANSI/SFF8441**

RoHS

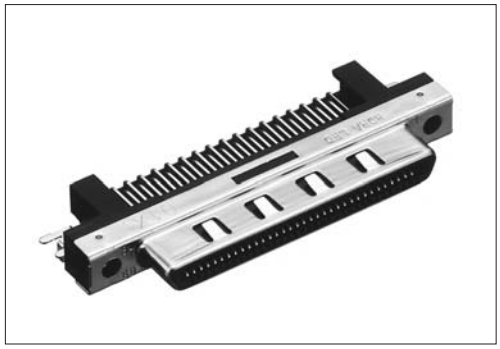

● **Configuration of product Part No.**

**HDRA- E 68 LFD T- OM18+**
① ② ③ ④ ⑤

① Series name
② No. of contacts: 68
③ Type of contact
LFD: Right-angle through hole type, female
④ With hold downs
⑤ Distance between center of mating section and mounting surface (mm)

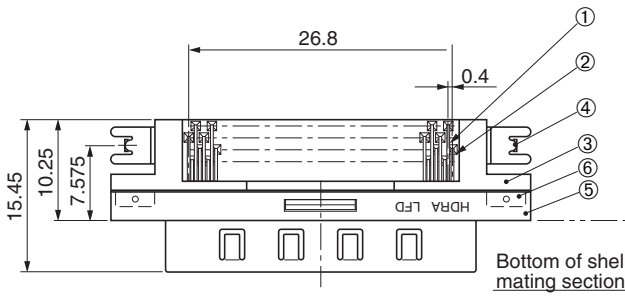


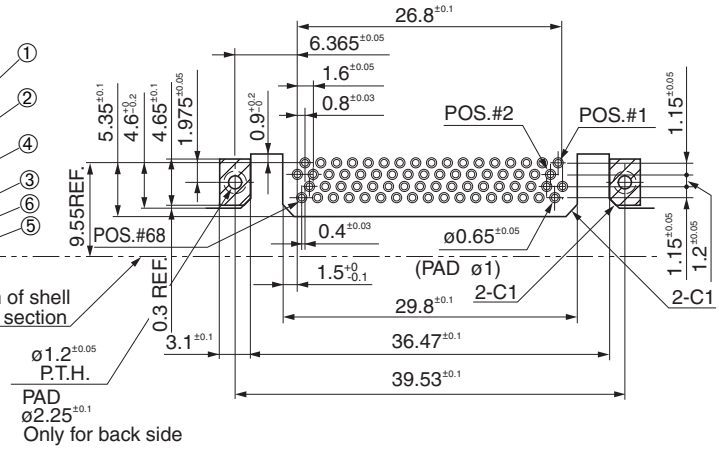


**Recommended PCB layout**
**t=1.2mm**

: PAD

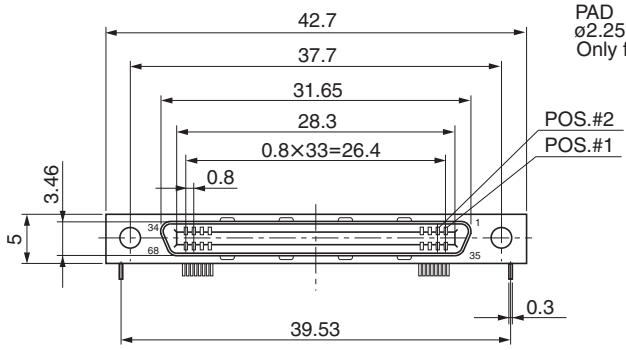


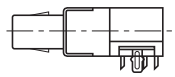

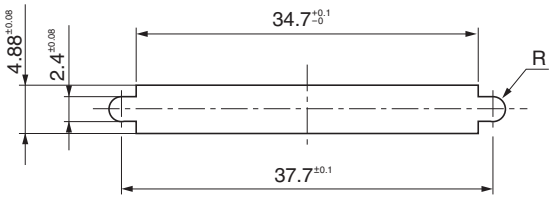


**Recommended panel cut-out dimensions**

● **Components**

| | |
|---|---|
| ① | Contacts |
| ② | Brackets |
| ③ | Insulator |
| ④ | Hold downs |
| ⑤ | Shell |
| ⑥ | Square nuts |

Select lock screws according to panel thickness.
If a panel or washer is not used, use lock screw
Part No. HDRA-E68LFD-7C.

**Mating connector**: HDRA series IDC type male cable connector, or straddle SMT type male connector

HONDA TSUSHIN KOGYO CO., LTD.

**0.8mm pitch connector**

**For PCB**

**Right-angle Through hole**

**ANSI/SFF8441**

# Right-angle through hole type female connector for PCB HDRA-E68LFD1T-( )+

RoHS

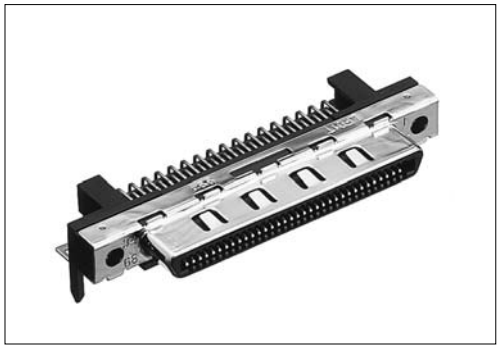

● **Configuration of product Part No.**

**HDRA- E 68 LFD 1 T -( )+**

① ② ③ ④ ⑤ ⑥

① Series name
② No. of contacts: 68
③ Type of contact:
LFD: Right-angle through hole type, female
④ Provided with shell and panel contact blade
⑤ Provided with board lock pin
⑥ Lock screw
Blank: None
SL : Provided
(Thickness of panel: 1.12mm)

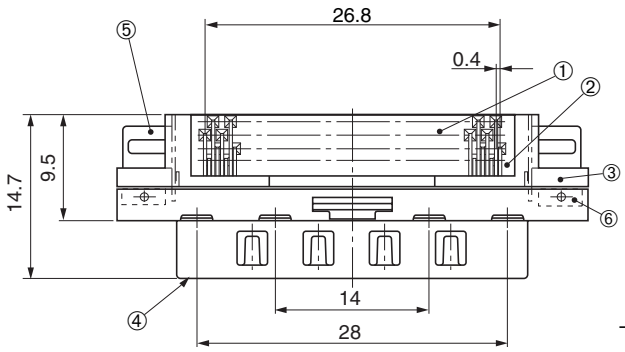


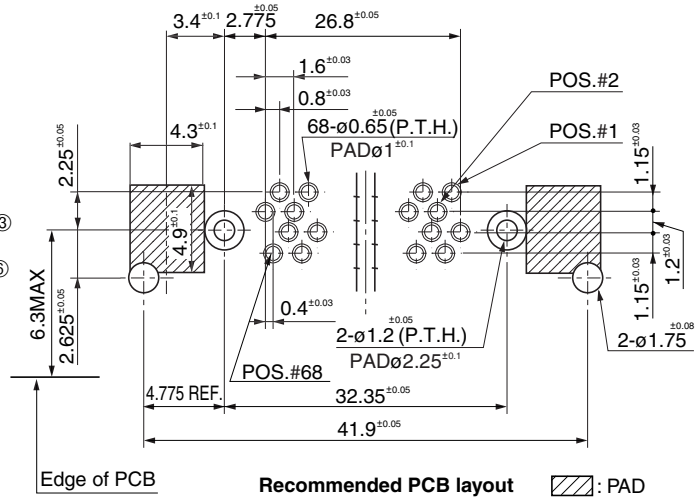


**Recommended PCB layout**
**t=1.6mm**

: PAD

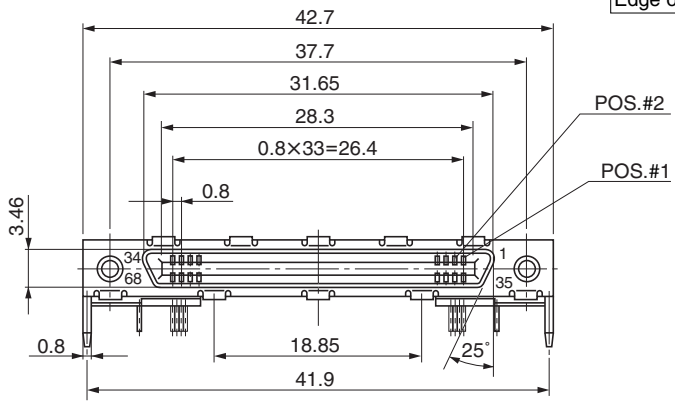


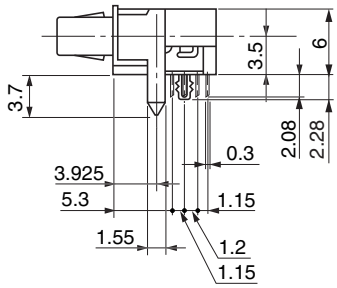


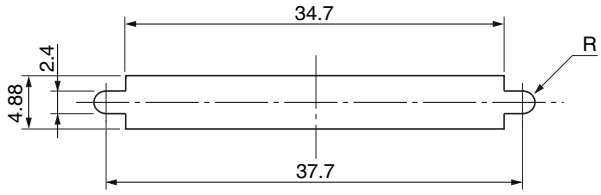


**Recommended panel cut-out dimensions**

Select the connector according to panel thickness.
For the application without panel, use washers or special lock screw (P/N: HDRA-E68LFD-7C).

● **Components**

| | |
|---|---|
| ① | Bracket |
| ② | Contacts |
| ③ | Insulator |
| ④ | Shell |
| ⑤ | Hold down |
| ⑥ | Square nuts |

**Mating connector**: HDRA series IDC type male cable connector, or straddle SMT type male connector

Through hole | SMT | Press-in | IDC | Soldering | Crimping | Wire wrapping | Others

# Right-angle through hole type female connector for PCB
# HDRA-EC68LFDT( )-( )+

RoHS

**0.8 mm pitch connector**
**For PCB**
**Right-angle Through hole**
**ANSI/SFF8441**

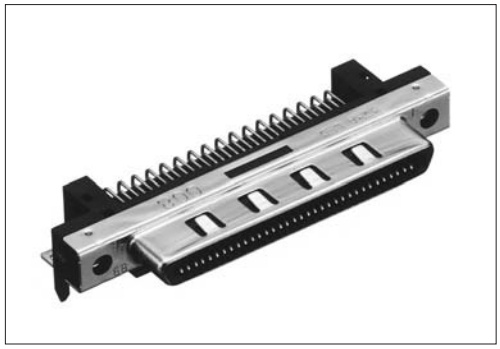

● **Configuration of product Part No.**

**HDRA- EC 68 LFD T ( )- ( )+**
① ② ③ ④ ⑤ ⑥

① Series name
② No. of contacts: 68
③ Type of contact
LFD: Right-angle through hole type, female
④ With board lock pin
⑤ Length of contact, board lock pins or location peg
Blank: A-2.08 mm contacts
: B-2.28 mm board lock pins
: C-3.7 mm location peg
S : A-2.08 mm contacts
B-2.28 mm board lock pins
C-2.3 mm location peg
2 : A-2.08 mm contacts
B-2.28 mm board lock pins
C-1.4 mm location peg
⑥ Lock screws
Blank : None
SL : provided (Thickness of panel: 1.12 mm)

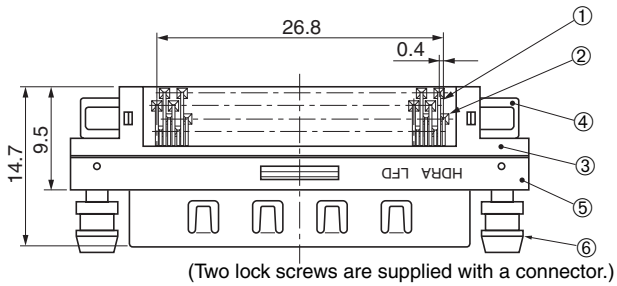


(Two lock screws are supplied with a connector.)

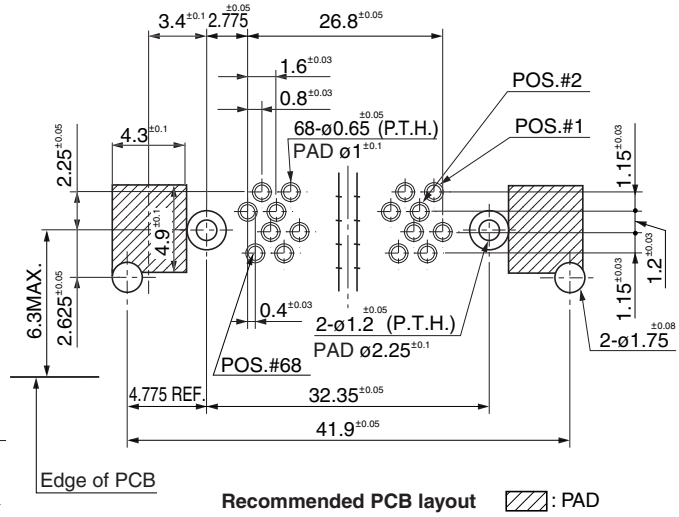


**Recommended PCB layout**
**t=1.6mm**

: PAD

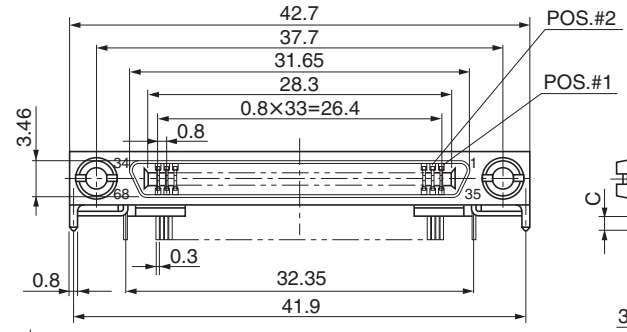


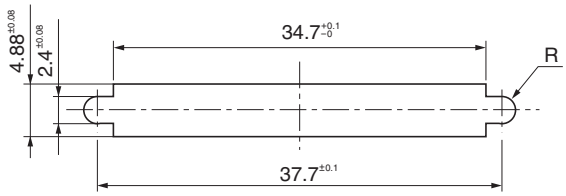


**Recommended panel cut-out dimensions**

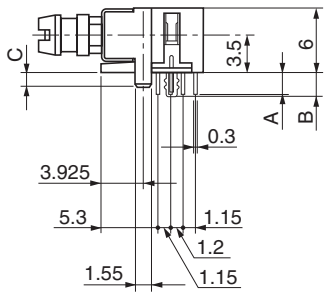


● **Components**

| | |
|---|---|
| ① | Contacts |
| ② | Brackets |
| ③ | Insulator |
| ④ | Hold downs |
| ⑤ | Shell |
| ⑥ | Lock screws |

Select the connector according to panel thickness.
For the application without panel, use washers or special lock screw (P/N: HDRA-E68LFD-7C).

**Mating connector**: HDRA series IDC type male cable connector, or straddle SMT type male connector

HONDA TSUSHIN KOGYO CO., LTD.

# Right-angle through hole type female connector for PCB
# HDRA-EC100LFDT( )-( )+

RoHS

**0.8mm pitch connector**
**For PCB**
**Right-angle Through hole**
**EMI shielded**

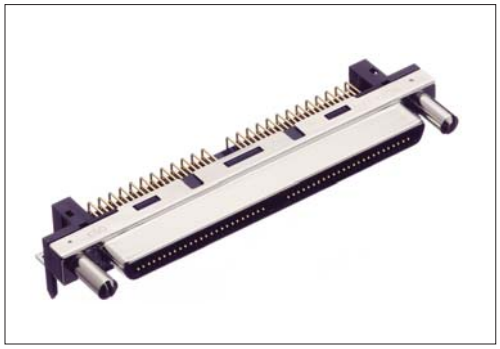

● **Configuration of product Part No.**

**HDRA- EC 100 LFD T ( )- ( )+**
① ② ③ ④ ⑤ ⑥

① Series name
② No. of contacts: 100
③ Type of contact
LFD: Right-angle through hole type, female
④ With ground contact
⑤ Through hole length
Blank: 2.08 mm
1 : 3.4 mm (under planning)
⑥ Lock screw
Blank: None
SL : Provided (Panel thickness: 1.12 mm)
GP : Guide pin

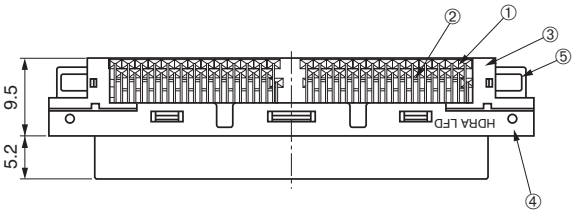


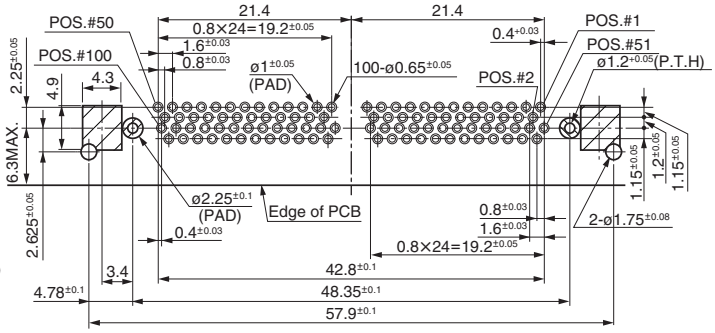


**Recommended PCB layout**
**t=1.6mm**

: PAD

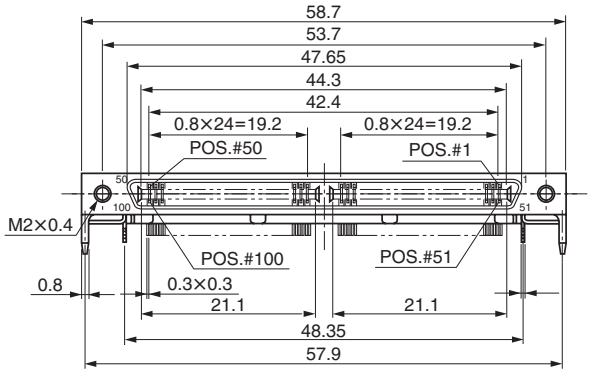


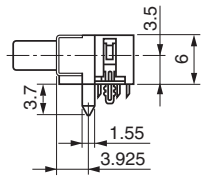


● **Components**

| | |
|---|---|
| ① | Bracket |
| ② | Contacts |
| ③ | Insulator |
| ④ | Shell |
| ⑤ | Hold downs |

Select the connector according to panel thickness. For the application without panel, use washers or special lock screw (P/N: HDRA-E68LFD-7C).

**Mating connector**: HDRA series male connector

Through hole | SMT | Press-in | IDC | Soldering | Crimping | Wire wrapping | Others

# Right-angle through hole type female connector for PCB HDRA-EA36LFDT-( )+

RoHS

**0.8mm pitch connector**
**For PCB**
**Right-angle Through hole**
**ANSI/SFF8441**

● **Configuration of product Part No.**

**HDRA- EA 36 LFD T-( )+**
① ② ③ ④ ⑤

① Series name
② No. of contacts: 36
③ Type of contact
LFD: Right-angle through hole type, female
④ Provided with board lock mechanism
⑤ Lock screw
Blank: None
SL : Provided (Thickness of panel: 1.12 mm)

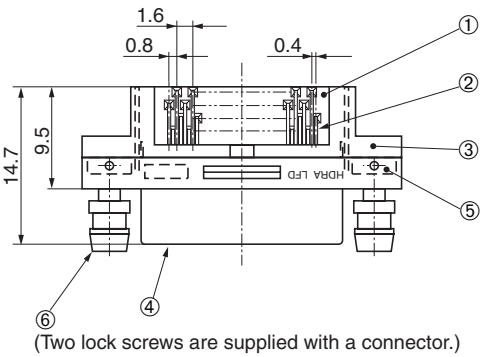


(Two lock screws are supplied with a connector.)

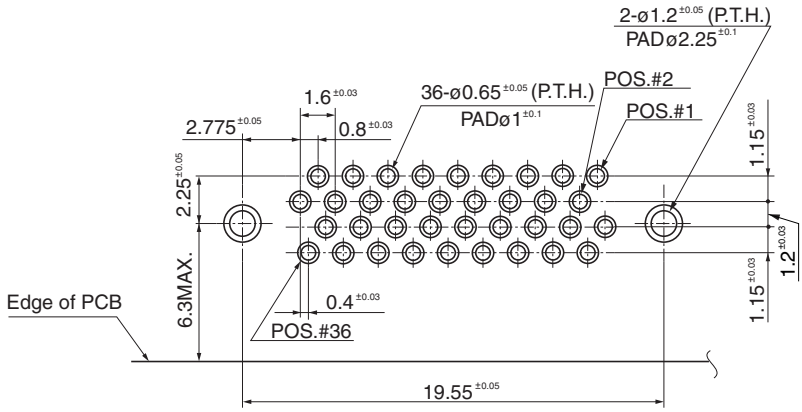


**Recommended PCB layout**
**t=1.6mm**

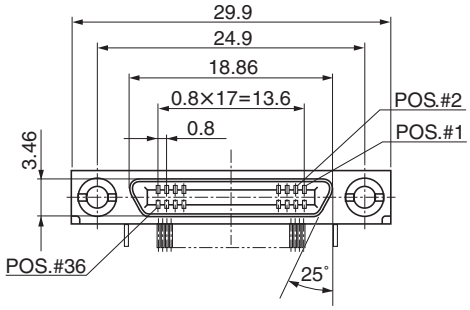


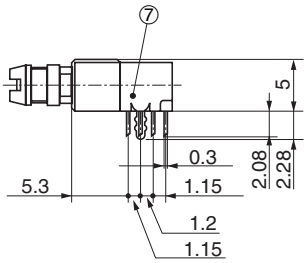


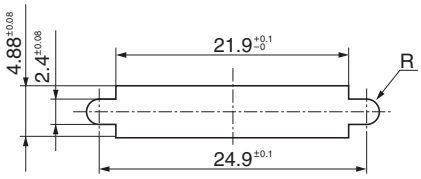


**Recommended panel cut-out dimensions**

Select the connector according to panel thickness.
For the application without panel, use washers or special lock screw (P/N: HDRA-E68LFD-7C).

● **Components**

| | |
|---|---|
| ① | Bracket |
| ② | Contacts |
| ③ | Insulator |
| ④ | Shell |
| ⑤ | Square nuts |
| ⑥ | Lock screw |
| ⑦ | Board lock pin |

**Mating connector**: HDRA series IDC type male cable connector

**Note●** Jack screw is not available at present.

# Right-angle through hole type female connector for PCB
# HDRA-E100LFDT( )-( )+

RoHS

**0.8 mm pitch connector**
**For PCB**
**Right-angle Through hole**
**ANSI/SFF8441**

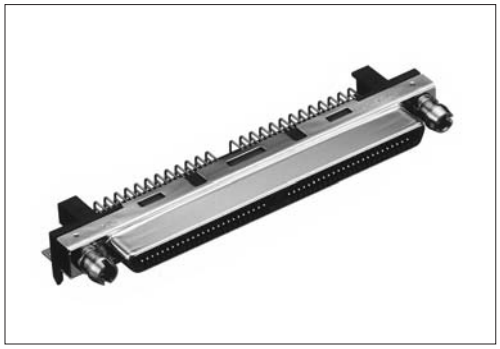

● **Configuration of product Part No.**

**HDRA- E 100 LFD T ( )- ( )+**
① ② ③ ④ ⑤ ⑥

① Series name
② No. of contacts: 100
③ Type of contact
LFD: Right-angle through hole type, female
④ With board lock pin
⑤ Length of contacts and board lock pins
Blank : A-2.08 mm contacts
B-2.28 mm board lock pins
1 : A-3.4 mm contacts
B-2.6 mm board lock pins
⑥ Lock screws
Blank: None
SL : provided (Thickness of panel: 1.12 mm)

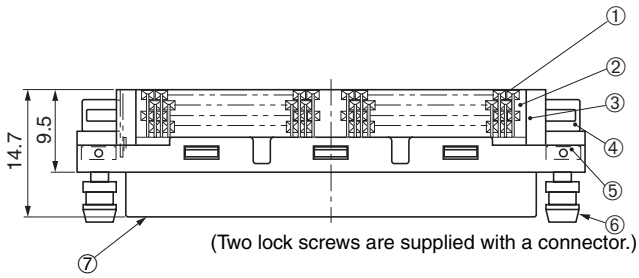


(Two lock screws are supplied with a connector.)

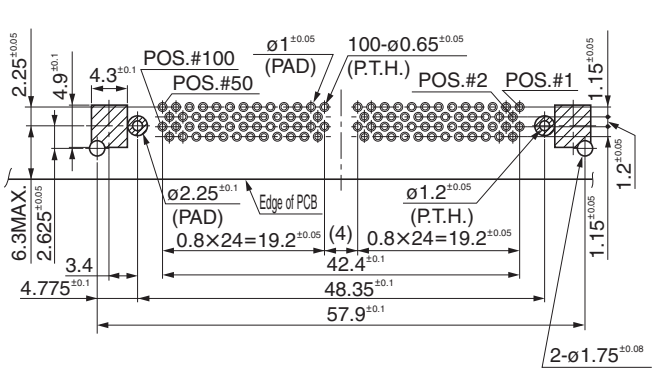


**Recommended PCB layout**
**t=1.6mm**

: PAD

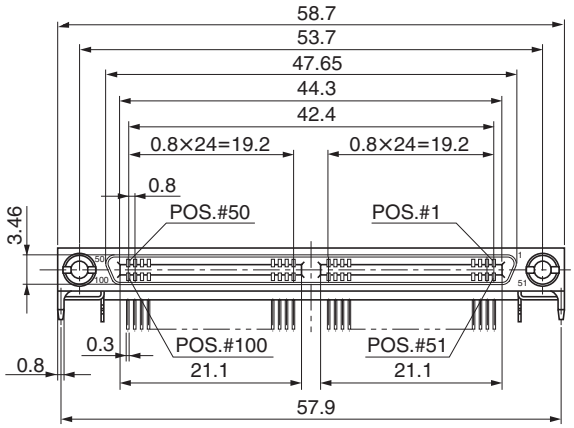


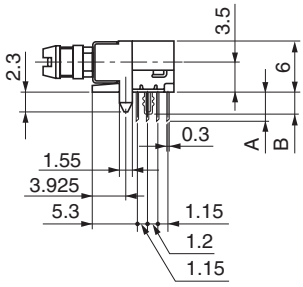


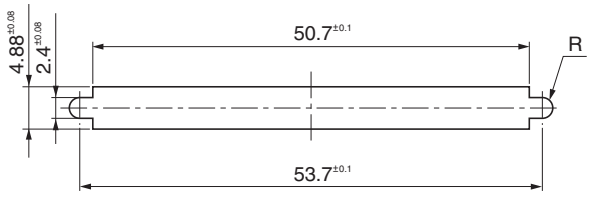


**Recommended panel cut-out dimensions**

Select the connector according to panel thickness.
For the application without panel, use washers or special lock screw (P/N: HDRA-E68LFD-7C).

● **Components**

| | |
|---|---|
| ① | Contacts |
| ② | Brackets |
| ③ | Insulator |
| ④ | Hold downs |
| ⑤ | Square nuts |
| ⑥ | Lock screws |
| ⑦ | Shell |

**Mating connector**: HDRA series IDC type male connector

# Right-angle through hole type female connector for PCB HDRA-E68W1LFDT-( )+

**0.8mm pitch connector**
**For PCB**
**Right-angle Through hole**
**ANSI/SFF8441**

RoHS

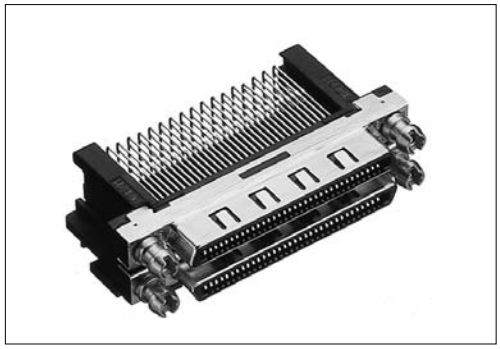

● **Configuration of product Part No.**

**HDRA- E 68 W 1 LFD T- ( )+**
① ② ③ ④ ⑤ ⑥

① Series name
② No. of contacts: 136 (68×2)
③ No. of stacks: 2
④ Type of contact
LFD: Right-angle through hole type, female
⑤ With location peg
⑥ Lock screw
Blank: None
SL : Provided (Thickness of panel: 1.12 mm)

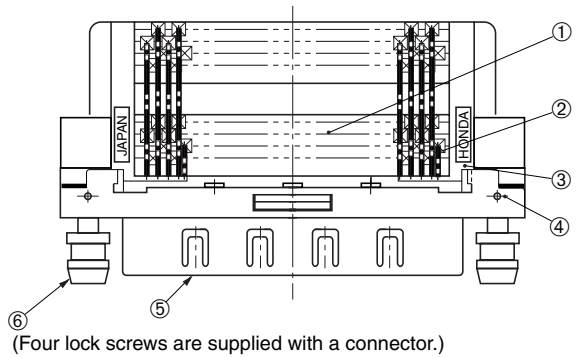


(Four lock screws are supplied with a connector.)

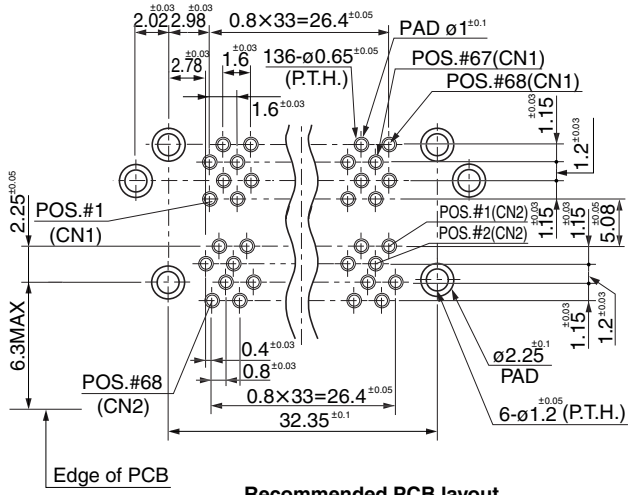


**Recommended PCB layout**
**t=1.6mm**

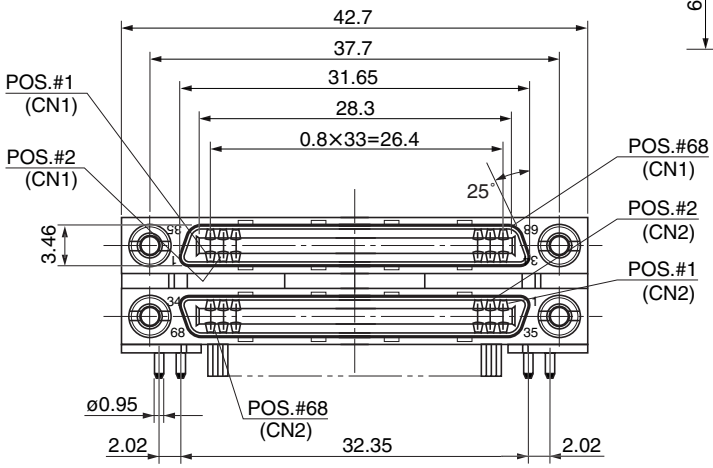


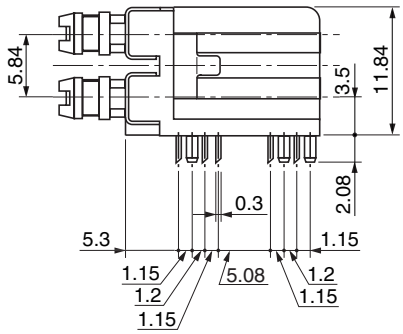


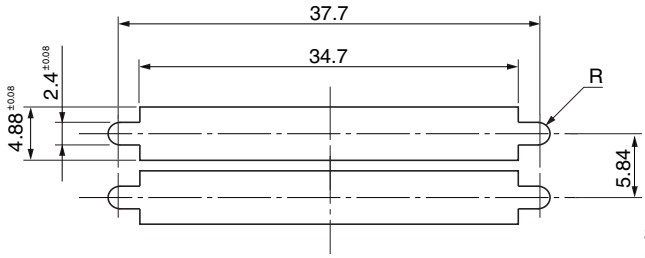


**Recommended panel cut-out dimensions**

Select the connector according to panel thickness. For the application without panel, use washers or special lock screw (P/N: HDRA-E68LFD-7C).

● **Components**

| | |
|---|---|
| ① | Bracket |
| ② | Contacts |
| ③ | Insulator |
| ④ | Square nuts |
| ⑤ | Shell |
| ⑥ | Lock screw |

**Mating connector**: HDRA series IDC type male cable connector, or straddle SMT type male connector

HONDA TSUSHIN KOGYO CO., LTD.

**0.8mm pitch connector**
**For PCB**
**Right-angle Through hole**
**ANSI/SFF8441**

# Right-angle through hole type female connector for PCB HDRA-E68W( )LFDT1EC-( )+

RoHS

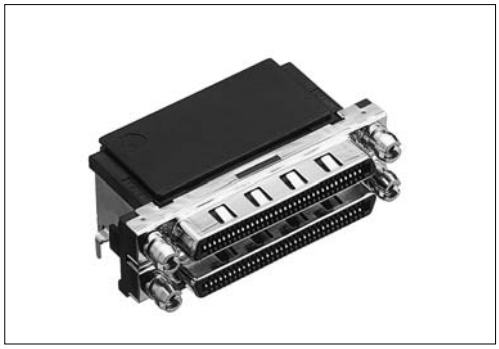

● **Configuration of product Part No.**

**HDRA- E 68 W ( ) LFD T1 E C -( )+**
① ② ③ ④ ⑤ ⑥ ⑦ ⑧ ⑨

① Series name
② No. of contacts: 136 (68×2)
③ No. of stacks: 2
④ Length of contact, through hole
1: 2.08 (PCB: 1.6 mm thick)
2: 3.4 (PCB: 2.4 mm thick)
⑤ Type of contact
LFD: Right-angle through hole type, female
⑥ Earth lock pin (provided with board lock mechanism)
⑦ Provided with shell connection reinforcement
⑧ Provided with protection cover for contacts and bends
⑨ Lock screw
Blank: None
SL : Provided (Thickness of panel: 1.12 mm)

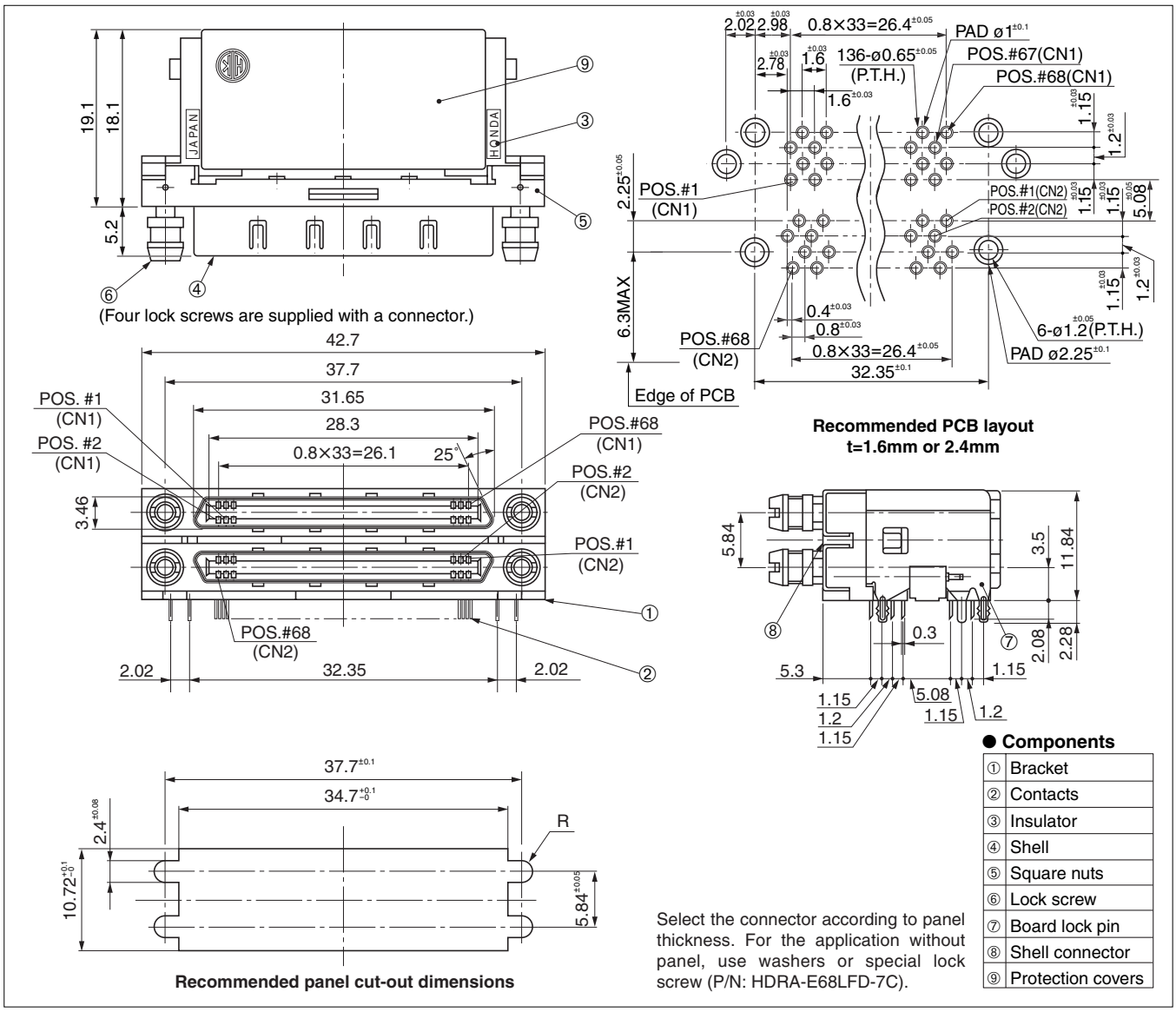


Select the connector according to panel thickness. For the application without panel, use washers or special lock screw (P/N: HDRA-E68LFD-7C).

● **Components**

| | |
|---|---|
| ① | Bracket |
| ② | Contacts |
| ③ | Insulator |
| ④ | Shell |
| ⑤ | Square nuts |
| ⑥ | Lock screw |
| ⑦ | Board lock pin |
| ⑧ | Shell connector |
| ⑨ | Protection covers |

**Mating connector**: HDRA series IDC type male cable connector, or straddle SMT type male connector

Through hole | SMT | Press-in | IDC | Soldering | Crimping | Wire wrapping | Others

HONDA TSUSHIN KOGYO CO., LTD.

**0.8 mm pitch connector**

**For PCB**

**Right-angle Through hole**

**ANSI/SFF8441**

# Right-angle through hole type female connector for PCB HDRA-E100W( )LFDT1EC-( )+

RoHS

● **Configuration of product Part No.**

**HDRA- E 100 W ( ) LFD T1 E C- ( )+**

① ② ③ ④ ⑤ ⑥ ⑦ ⑧ ⑨

① Series name
② No. of contacts: 100
③ W: Double stacked connector
④ Length of contacts or board lock pins
1: A-2.08 mm contacts
B-2.28 board lock pins
2: A-3.4 mm contacts
B-3.6 mm board lock pins
⑤ Type of contact
LFD: Right-angle through hole type, female
⑥ Earth lock pin (provided with board lock mechanism)
⑦ Provided with shell connection reinforcement
⑧ Provided with protection cover for contacts and bends
⑨ Lock screws
Blank: None
SL : provided (Thickness of panel: 1.12 mm)

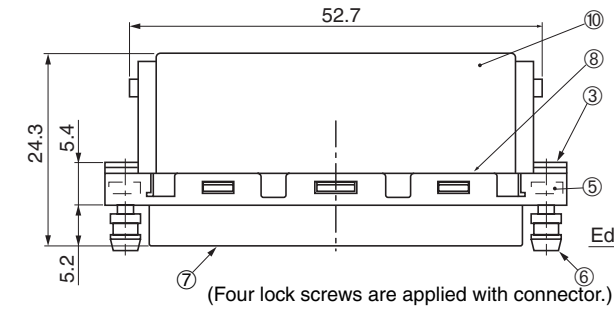


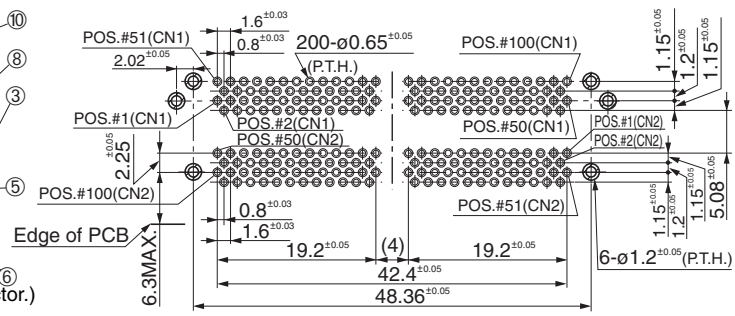


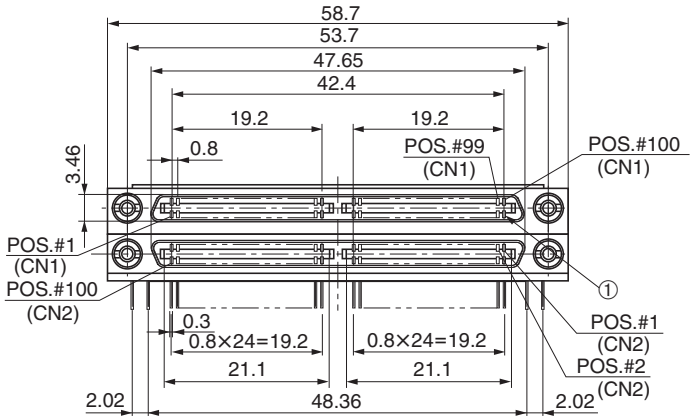


**Recommended PCB layout**
**t=1.6mm or 2.4mm**

: PAD

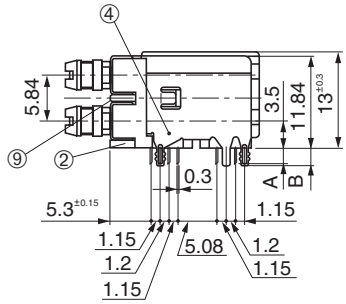


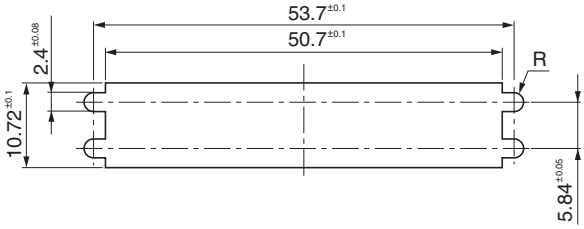


**Recommended panel cut-out dimensions**

Select the connector according to panel thickness. For the application without panel, use washers or special lock screw (P/N: HDRA-E68LFD-7C).

● **Components**

| | |
|---|---|
| ① | Contacts |
| ② | Brackets |
| ③ | Insulator A |
| ④ | Board lock pin |
| ⑤ | Square nuts |
| ⑥ | Lock screws |
| ⑦ | Shell |
| ⑧ | Insulator B |
| ⑨ | Shell connection |
| ⑩ | Protection covers |

**Mating connector**: HDRA series IDC type male connector

HONDA TSUSHIN KOGYO CO., LTD.

# Straight SMT type female connector for PCB
# HDRA-E68FYT-( )+

RoHS

**0.8mm pitch connector**
**For PCB**
**Straight SMT**
**ANSI/SFF8441**

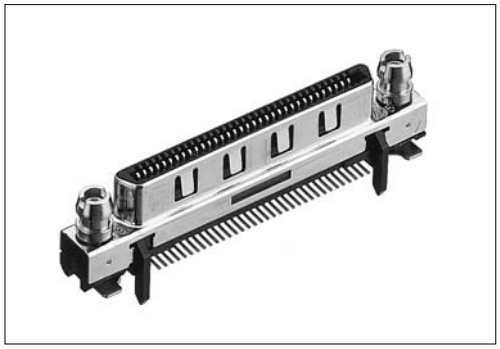

● **Configuration of product Part No.**

**HDRA- E 68 FY T- ( )+**
① ② ③ ④ ⑤

① Series name
② No. of contacts: 68
③ Type of contact
FY: Straight SMT type, female
④ Provided with board lock mechanism
⑤ Lock screw
Blank: None
SL : Provided
(Thickness of panel: 1.12 mm)

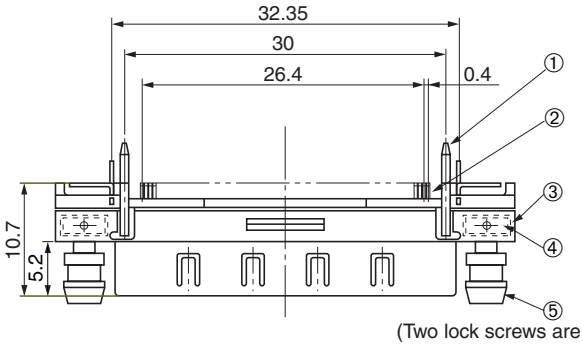


(Two lock screws are supplied with a connector.)

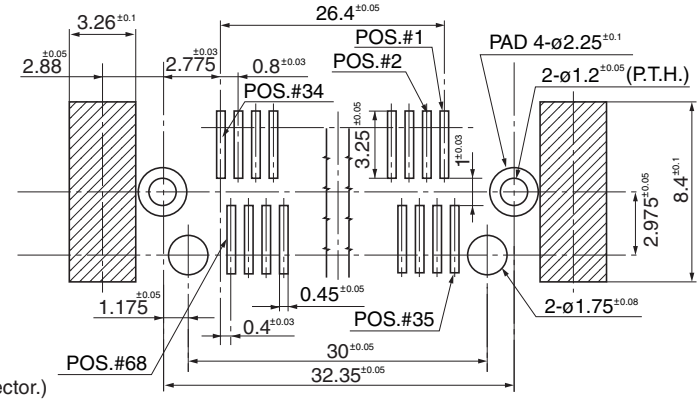


**Recommended PCB layout**
**t=1.6mm**

: PAD

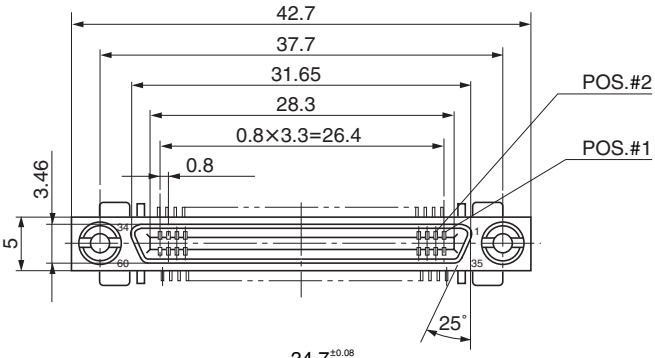


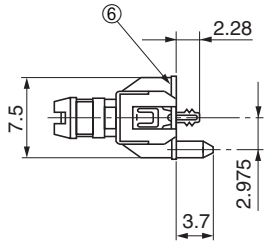


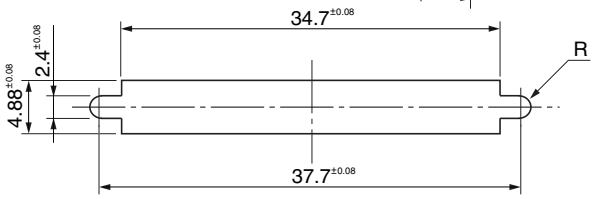


**Recommended panel cut-out dimensions**

Select the connector according to panel thickness.
For the application without panel, use washers or special lock screw (P/N: HDRA-E68LFD-7C).

● **Components**

| | |
|---|---|
| ① | Insulator |
| ② | Contacts |
| ③ | Shell |
| ④ | Square nuts |
| ⑤ | Lock screw |
| ⑥ | Hold down |

**Mating connector**: HDRA series IDC type male cable connector, or straddle SMT type male connector

Through hole | SMT | Press-in | IDC | Soldering | Crimping | Wire wrapping | Others

HONDA TSUSHIN KOGYO CO., LTD.

**0.8 mm pitch connector**

**For PCB**

**Right-angle SMT**

**ANSI/SFF8441**

# Right-angle SMT type female connector for PCB HDRA-ED68LFZGT( )-( )+

RoHS

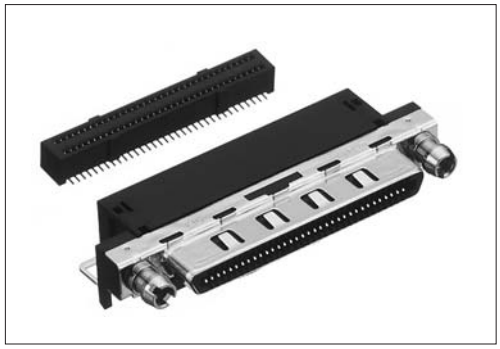

● **Configuration of product Part No.**

**HDRA- ED 68 LFZ G T ( )- ( )+**

① ② ③ ④ ⑤ ⑥ ⑦

① Series name
② No. of contacts: 68
③ Type of contact
LFZ: Right-angle, female
④ Contact plating
G: 0.76 μm Gold plate
⑤ Ground lock pins with hold downs
⑥ Form of shell
Blank : Standard shell
A : Shell with flange for EMI
⑦ Lock screws
L: Provided

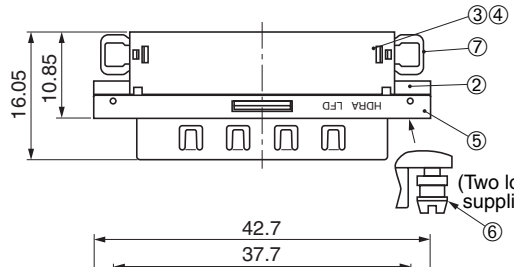


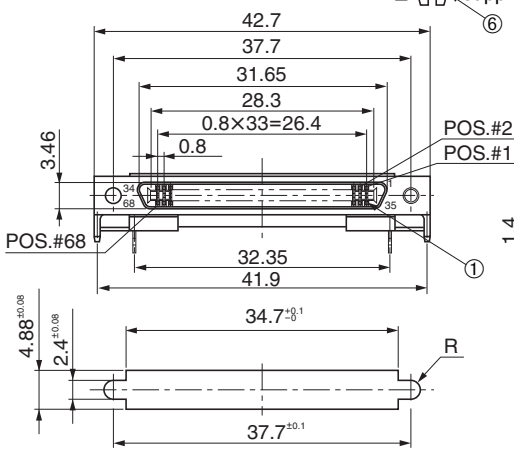


Recommended panel cut-out dimensions

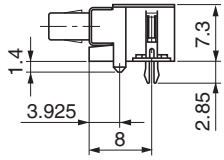


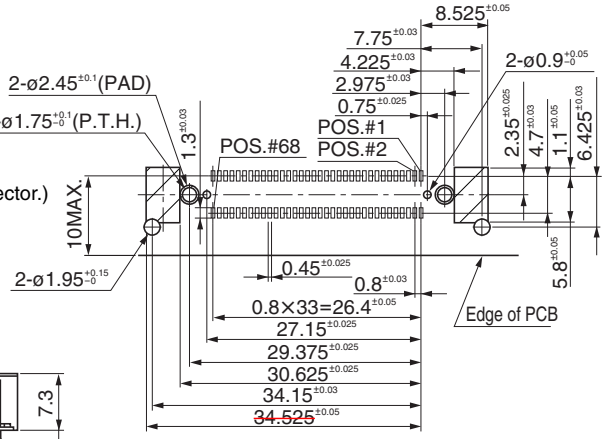


Recommended PCB layout t=1.6mm

▨: PAD

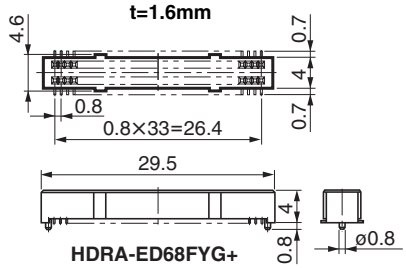


HDRA-ED68FYG+

Taping packages are available for automatically mounting board connectors on a PCB. The product part number of the taping package is HDRA-ED68FYG-TP1+.
One reel provides 1000 board connectors.
The reel diameter is 380 mm. The tape width is 56 mm.

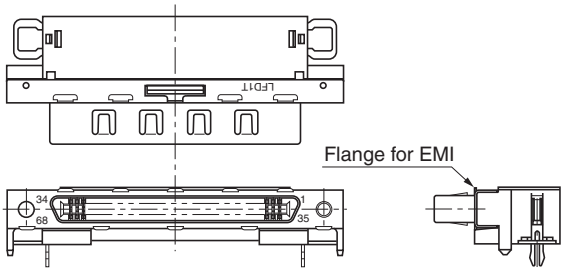


HDRA-ED68LFZGTA+

**Mounting Method of Right-angle SMT type Female Connector for PCB**

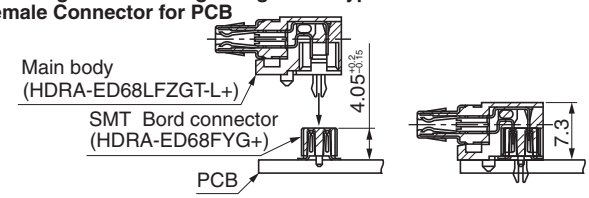


After board connectors are mounted on a PCB, mate them with the main body, and solder hold downs and ground lock pins.

● **Components**

| | | | |
|---|---|---|---|
| ① | Contacts | ⑤ | Shell |
| ② | Insulator A | ⑥ | Lock screws |
| ③ | Insulator B | ⑦ | Hold downs |
| ④ | Insulator C | | |

Select the connector according to panel thickness. For the application without panel, use washers or special lock screw (P/N: HDRA-E68LFD-7C).

**Mating connector**: HDRA series IDC type male cable connector, or straddle SMT type male connector

HONDA TSUSHIN KOGYO CO., LTD.

# Right-angle SMT type female connector for PCB
# HDRA-ED136LFZGT( )-( )+

RoHS

**0.8 mm pitch connector**
**For PCB**
**Right-angle SMT**
**ANSI/SFF8441**

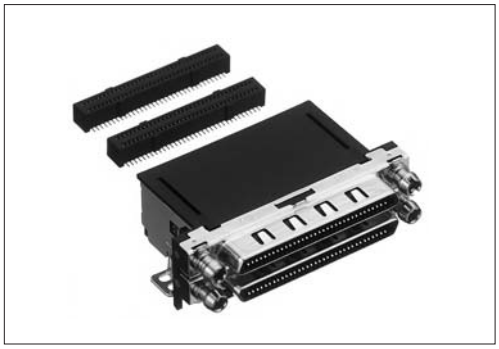

● **Configuration of product Part No.**

**HDRA- ED 136 LFZ G T ( )- ( )+**
① ② ③ ④ ⑤ ⑥ ⑦

① Series name
② No. of contacts: 136
③ Type of contact
LFZ: Right-angle SMT type, female
④ Contact plating
G: 0.76 μm Gold plate
⑤ Ground lock pins with hold downs
⑥ Form of shell
Blank: Standard shell
A: Shell with flange for EMI
⑦ Lock screws
L: Provided
(Panel thickness: t = 1.12 mm or less)

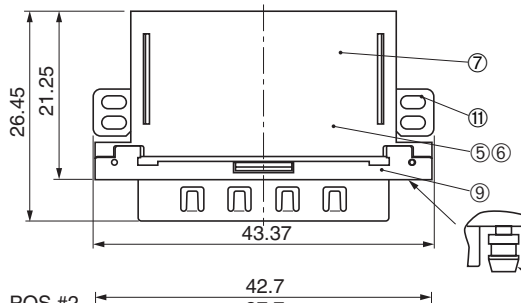


Select the connector according to panel thickness. For the application without panel, use washers or special lock screw (P/N: HDRA-E68LFD-7C).

(Four lock screws are supplied with a connector.)

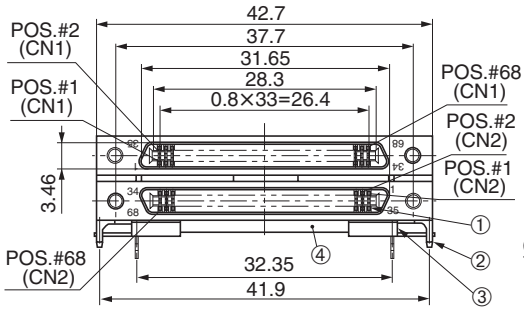


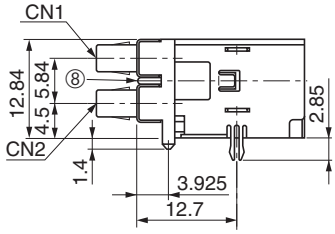


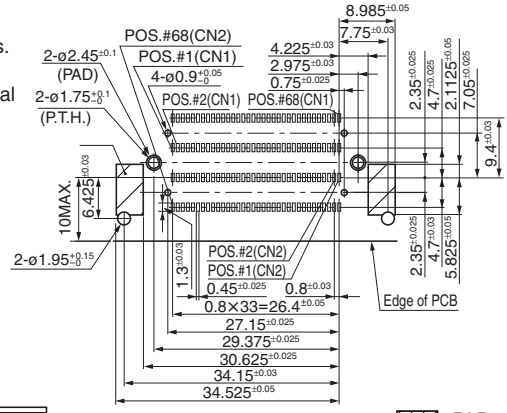


**Recommended PCB layout**
**t=1.6mm**

: PAD

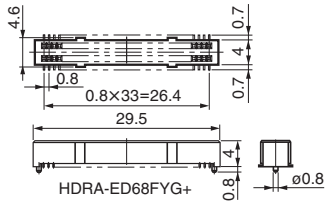


HDRA-ED68FYG+

Taping packages are available for automatically mounting board connectors on a PCB. The product part number of the taping package is HDRA-ED68FYG-TP2.
One reel provides 1000 board connectors. (500 sets.
Two board connectors can be mounted at a time using a cap.)
The reel diameter is 380 mm. The tape width is 56 mm.

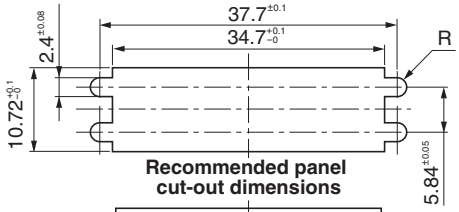


**Recommended panel cut-out dimensions**

**Mounting Method of Right-angle SMT type Female Connector for PCB**

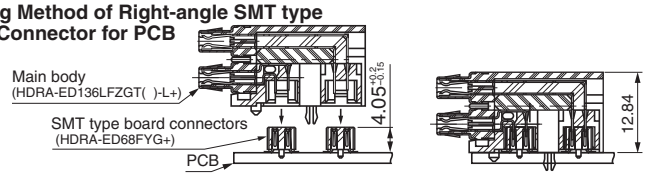


After board connectors are mounted on a PCB, mate them with the main body, and solder hold downs and ground lock pins.

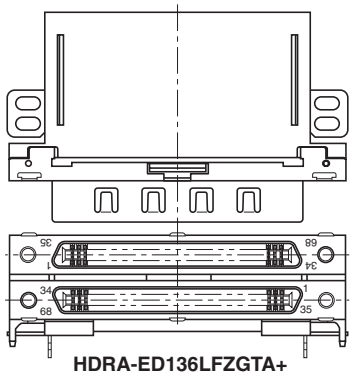

**HDRA-ED136LFZGTA+**

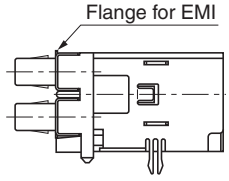


● **Components**

| | | | | | |
|---|---|---|---|---|---|
| ① | Contacts | ⑤ | Insulator D | ⑨ | Shell |
| ② | Insulator A | ⑥ | Insulator E | ⑩ | Lock screws |
| ③ | Insulator B | ⑦ | Insulator F | ⑪ | Hold downs |
| ④ | Insulator C | ⑧ | Shell connection hardware | | |

**Mating connector**: HDRA series IDC type male cable connector, or straddle SMT type male connector

# Straddle SMT type female connector for PCB
# HDRA-E68FT+

0.8mm pitch connector
For PCB
Straddle SMT
ANSI/SFF8441

RoHS

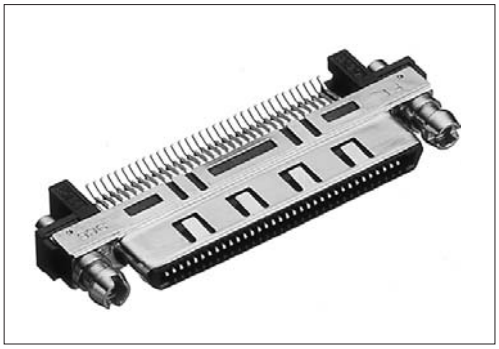

● **Configuration of product Part No.**

**HDRA- E 68 FT+**
① ② ③

① Series name
② No. of contacts: 68
③ Type of contact
FT: Straddle SMT type, female

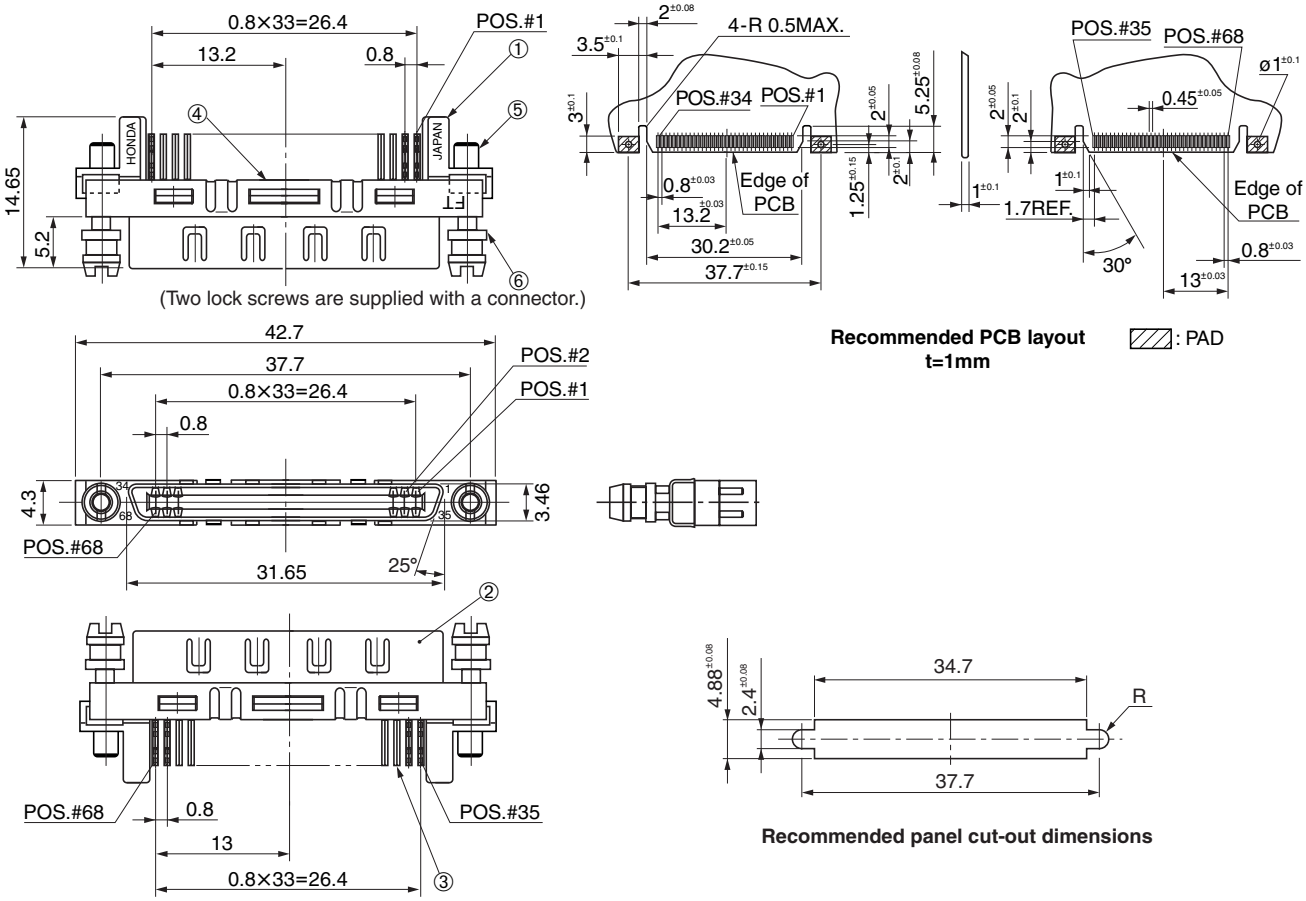


Recommended panel cut-out dimensions

● **Components**

| | |
|---|---|
| ① | Insulator A |
| ② | Shell |
| ③ | Contacts |
| ④ | Insulator B |
| ⑤ | Square nuts |
| ⑥ | Lock screw |

Select the connector according to panel thickness.
For the application without panel, use washers or special lock screw (P/N: HDRA-E68LFD-7C).

**Mating connector**: HDRA series IDC type male cable connector, or straddle SMT type male connector

HONDA TSUSHIN KOGYO CO., LTD.

**0.8 mm pitch connector**

**For PCB**

**Straddle SMT**

**ANSI/SFF8441**

# Straddle SMT type female connector for PCB
# HDRA-E68FT2-( )+

RoHS

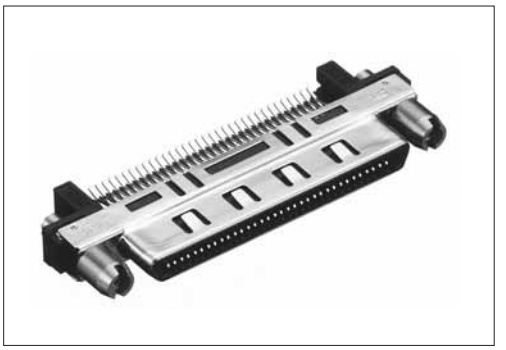

● **Configuration of product Part No.**

**HDRA- E 68 FT 2- ( )+**
① ② ③ ④ ⑤

① Series name
② No. of contacts: 68
③ Type of contact
FT: Straddle SMT type, female
④ PCB thickness: 0.5 mm
⑤ Lock screws
Blank: None
SL : provided

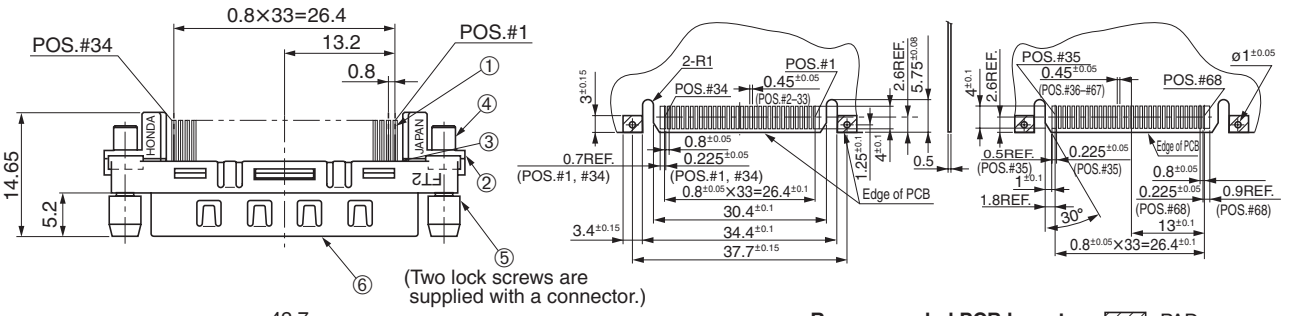


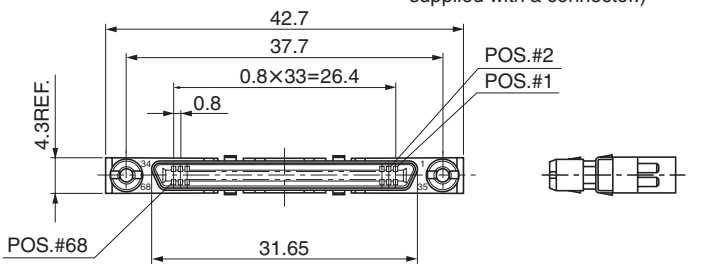


**Recommended PCB layout**
**t=0.5mm**

: PAD

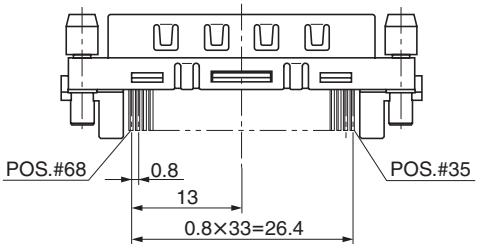


● **Components**

| | |
|---|---|
| ① | Contacts |
| ② | Insulator A |
| ③ | Insulator B |
| ④ | Square nuts |
| ⑤ | Lock screws |
| ⑥ | Shell |

**Mating connector**: HDRA series IDC type male cable connector, or straddle SMT type male connector

Through hole | SMT | Press-in | IDC | Soldering | Crimping | Wire wrapping | Others

# Straddle SMT type female connector for PCB
# HDRA-E68FT2-OM06+

RoHS

**0.8 mm pitch connector**
**For PCB**
**Straddle SMT**
**ANSI/SFF8441**

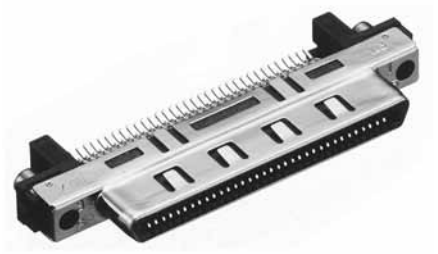

● **Configuration of product Part No.**

**HDRA- E 68 FT 2- OM06+**
① ② ③ ④ ⑤

① Series name
② No. of contacts: 68
③ Type of contact
FT: Straddle SMT type, female
④ PCB thickness: 0.5 mm
⑤ Distance between center of mating section and mounting surface (mm)

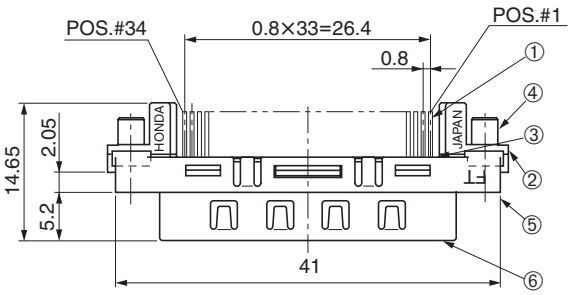


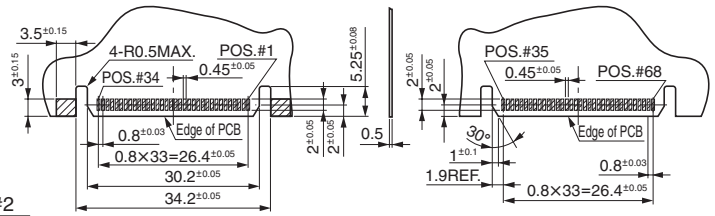


**Recommended PCB layout**
**t=0.5mm**

: PAD

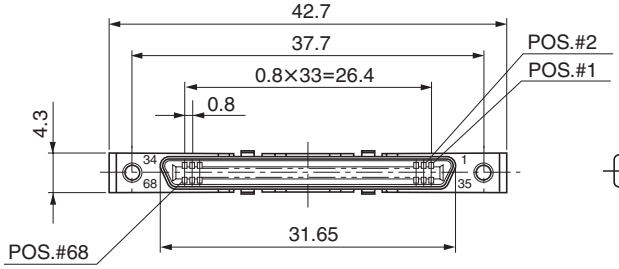


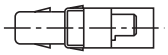

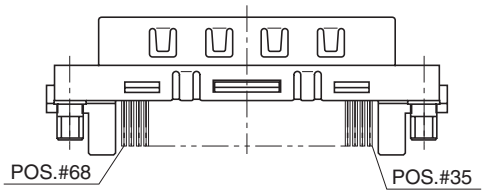


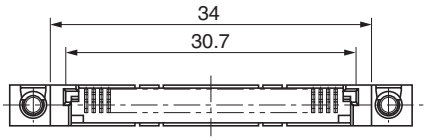


● **Components**

| | |
|---|---|
| ① | Contacts |
| ② | Insulator A |
| ③ | Insulator B |
| ④ | Square nuts |
| ⑤ | Lock screws |
| ⑥ | Shell |

**Mating connector**: HDRA series IDC type male cable connector, or straddle SMT type male connector

# EMI-shielded vertical plastic housing for standard cable HDRA-E68LGKP( )

RoHS

**0.8mm pitch connector**
**Vertical housing**
**EMI shielded**
**ANSI/SFF8441**

● **Configuration of product Part No.**

**HDRA- E 68 LGKP ( )**
① ② ③

① Series name
② No. of contacts: 68
③ A: Vertical cable holding type
C: Vertical ultrasonic welding type
E: Vertical ultrasonic welding type
F: Vertical ultrasonic welding type
Outside diameter of cable is shown in the dimension table.

**HDRA-E68LGKPA**

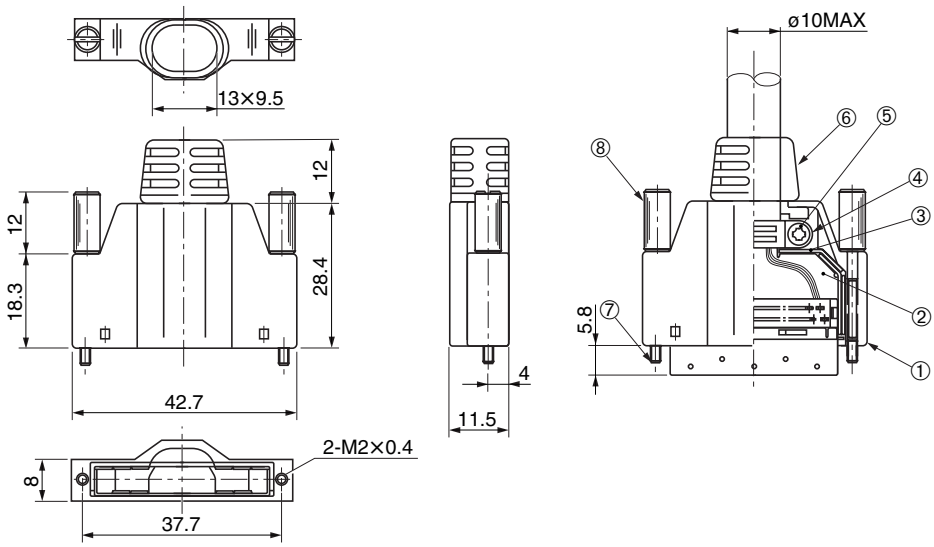


Thumb screw with plastic cap should be tightened by hand. For screw driver assembly use the product (P/N: HDRA-E68LGKPE3) with metal thumb screws attached.

● **Components**

| | |
|---|---|
| ① | Cover |
| ② | Inner shell A |
| ③ | Inner shell B |
| ④ | Cable clamp |
| ⑤ | Screw |
| ⑥ | Bushing |
| ⑦ | Thumb screw |
| ⑧ | Cap (plastic) |

**HDRA-E68LGKPC,LGKPE,LGKPF**

**The following figure shows HDRA-E68LGKPF.**

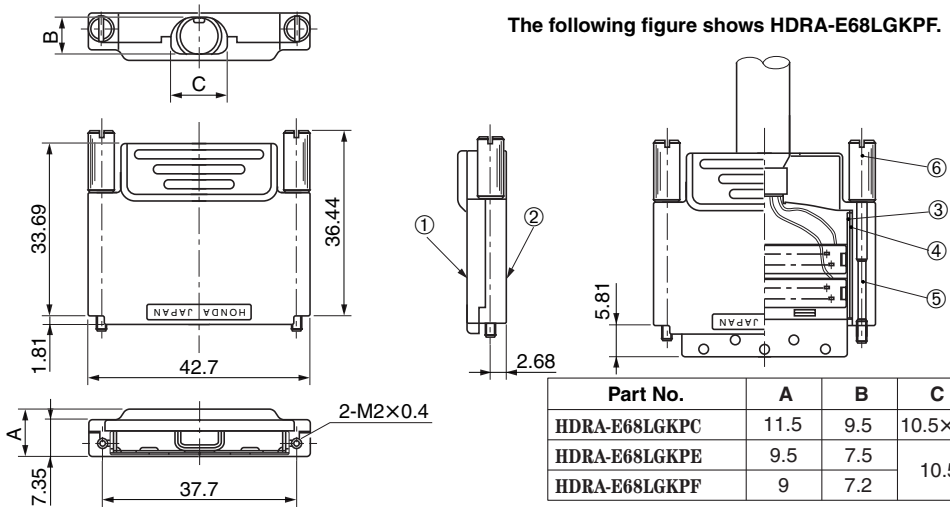


| Part No. | A | B | C |
|---|---|---|---|
| HDRA-E68LGKPC | 11.5 | 9.5 | 10.5×9.5 |
| HDRA-E68LGKPE | 9.5 | 7.5 | 10.5 |
| HDRA-E68LGKPF | 9 | 7.2 | |

● **Components**

| | |
|---|---|
| ① | Cover A |
| ② | Cover B |
| ③ | Shell A |
| ④ | Shell B |
| ⑤ | Thumb screw |
| ⑥ | Cap (plastic) |

**For use with connectors**: HDR series IDC type cable connector : -LGKPA for MA, -LGKPC/-LGKPE for MA1, and -LGKPF for MC1

**Required tools (for LGKPC, LGKPE and LGKPF)**: Clamp caulking tools: FLPT-0017B (Refer to page Tool-10)

Ultrasonic welder, Housing holding jig, Sonic welder

HONDA TSUSHIN KOGYO CO., LTD.

**0.8 mm pitch connector**
**Housing**
**Vertical**
**EMI filtered**

# EMI-filtered vertical metallic housing HDRA-E100LPA

RoHS

● **Configuration of product Part No.**

**HDRA- E 100 LP A**
① ② ③ ④

① Series name
② No. of contacts: 100
③ Type of housing: Vertical type
④ Compatible cable
A: Outside diameter of cable is 9.8 mm

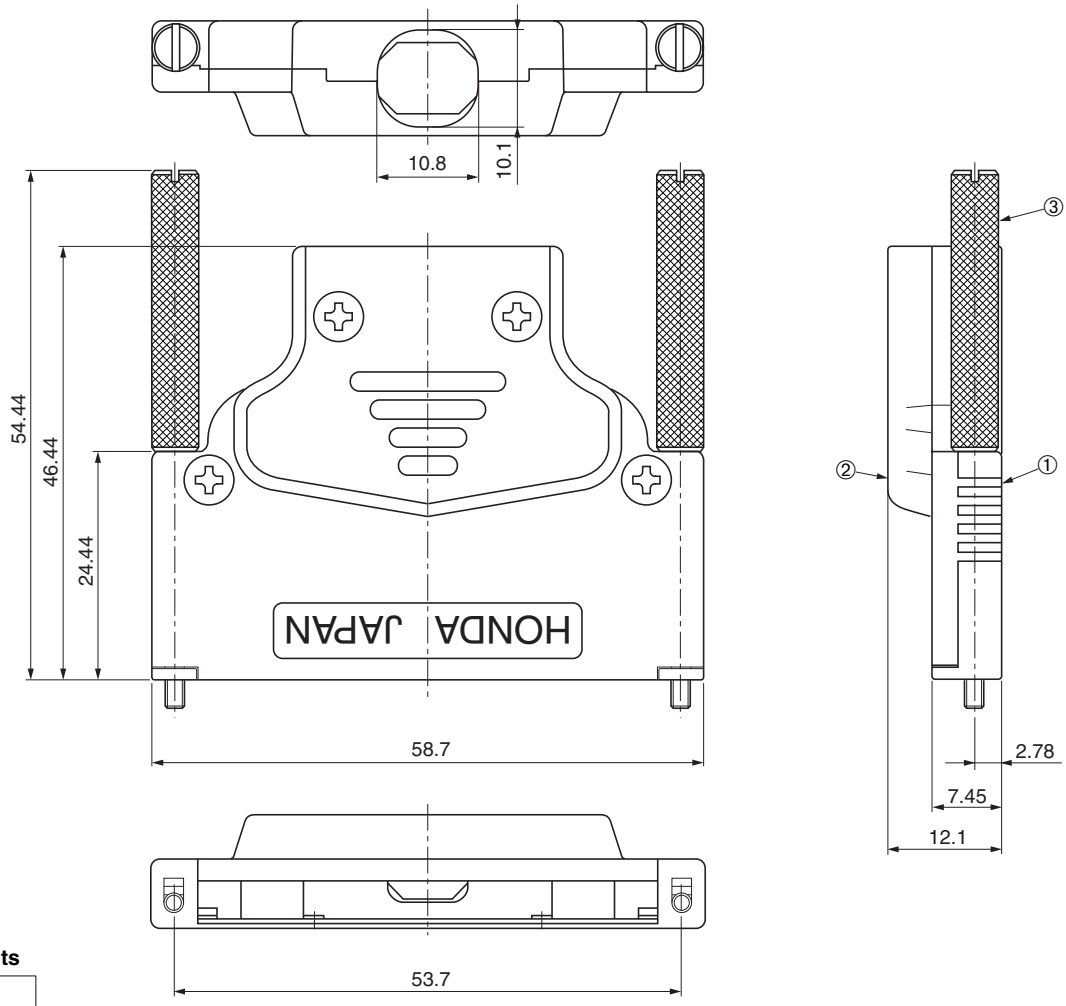


● **Components**

| | |
|---|---|
| ① | Housing A |
| ② | Housing B |
| ③ | Lock screws |

**For use with connectors:** HDRA-E100M( )1+

Through hole | SMT | Press-in | IDC | Soldering | Crimping | Wire wrapping | Others

# EMI-filtered vertical metallic housing
# HDRA-E100LPW( )

RoHS

**0.8 mm pitch connector**
**Housing**
**Vertical**
**EMI filtered**

● **Configuration of product Part No.**

**HDRA- E 100 LP W ( )**
① ② ③ ④

① Series name
② No. of contacts: 100
③ Type of housing: Vertical type
④ Compatible cable and form of through hole
B : Two holes are available for two cables. Outside diameters of cable are 6.9 mm
C : One hole is available for one cable. Outside diameter of cable is 9.6 mm

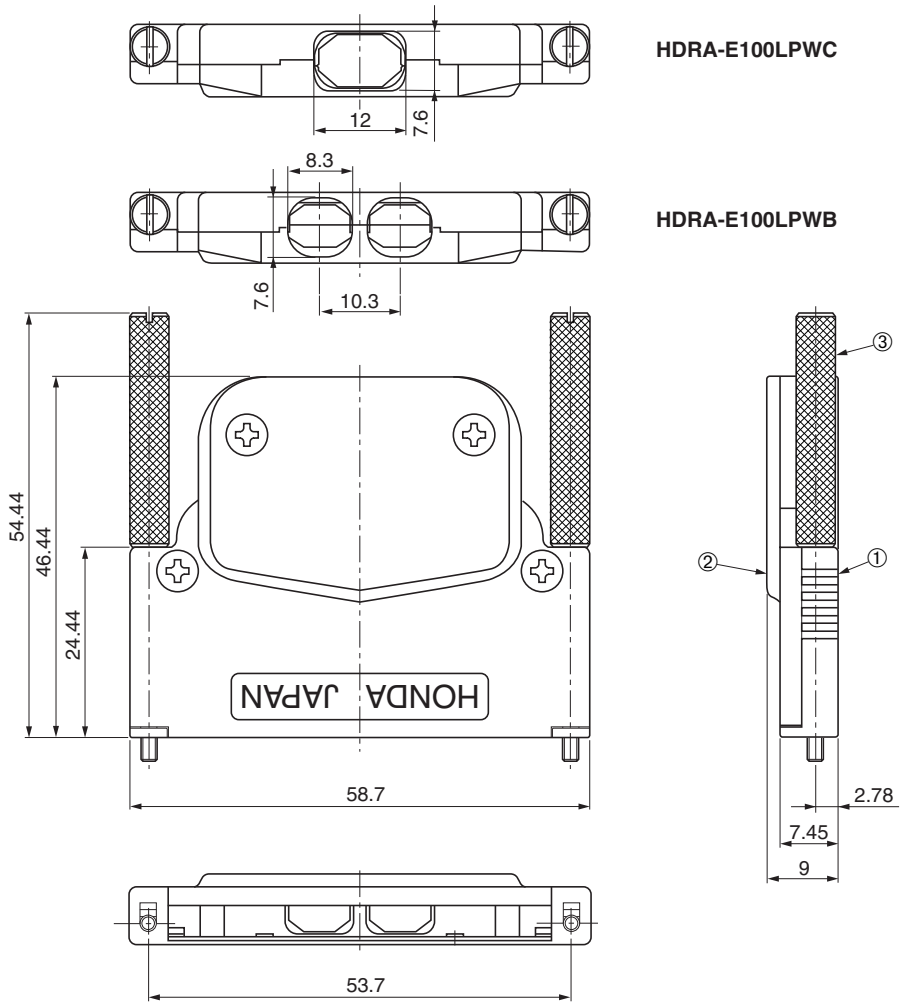


● **Components**

| | |
|---|---|
| ① | Housing A |
| ② | Housing B |
| ③ | Lock screws |

**For use with connectors:** HDRA-E100M( )1+

HONDA TSUSHIN KOGYO CO., LTD.

**0.8mm pitch connector**
**Vertical housing**
**EMI shielded**
**ANSI/SFF8441**

# EMI-shielded vertical plastic housing
# HDRA-E36LPTH

RoHS

● **Configuration of product Part No.**

**HDRA- E 36 LPTH**
① ② ③

① Series name
② No. of contacts: 36
③ Type of housing: Vertical type

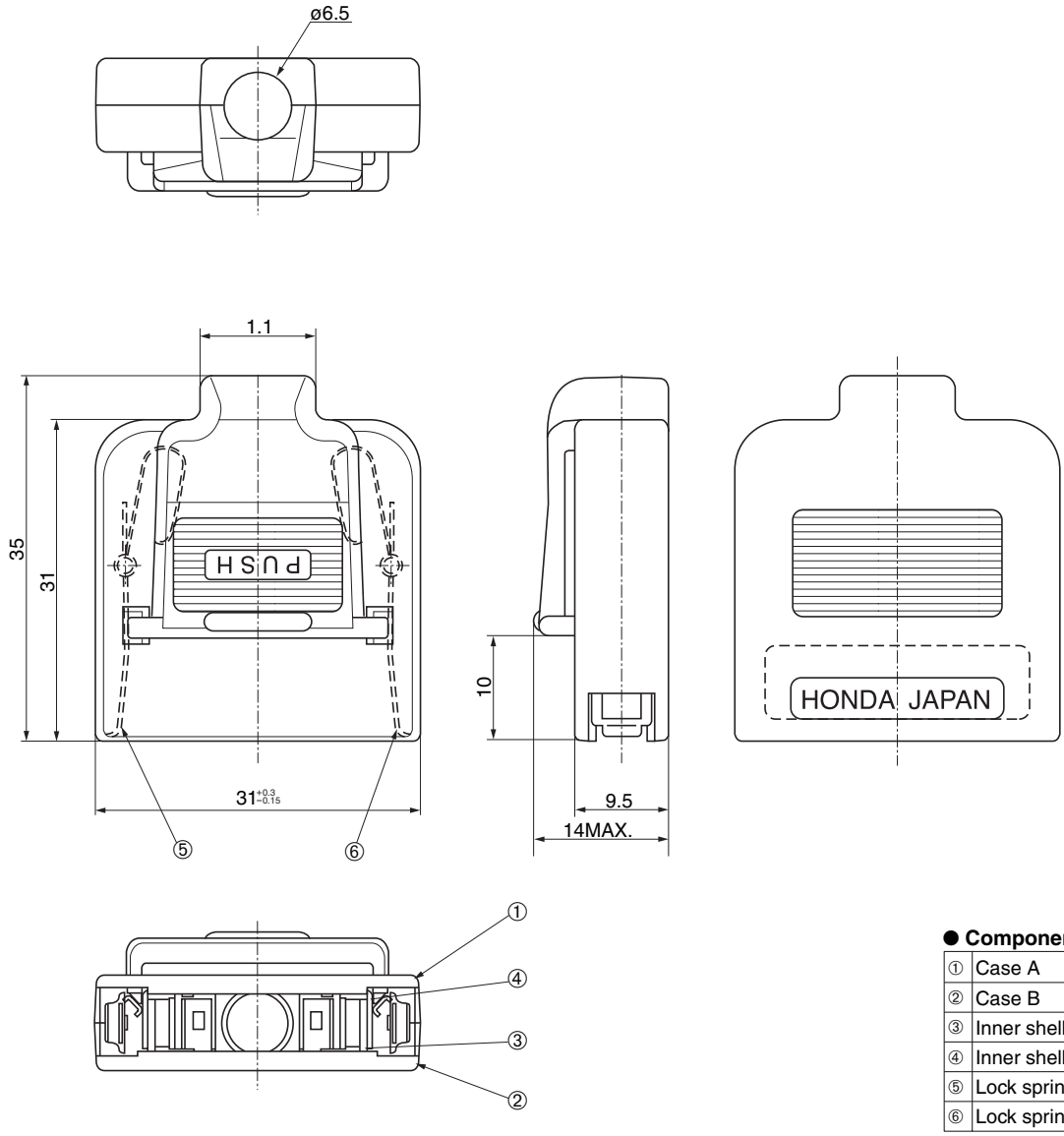


● **Components**

| | |
|---|---|
| ① | Case A |
| ② | Case B |
| ③ | Inner shell A |
| ④ | Inner shell B |
| ⑤ | Lock spring A |
| ⑥ | Lock spring B |

**For use with connectors**: HDRA-E36M( )+

**Mating connectors**: HDRA -EA36LFDT+ + Lock screw (HDR-E14LMY-SL-02C) panel:0.5-0.8mm thick
-EA36FT-NS+ + Lock screw (HDR-E14LMY-SL-02C) panel:0.5-0.8mm thick

**Required tools**: Clamp caulking tools: FLPT-0024A (Refer to page Tool-10) Ultrasonic welder, Housing holding jig, Sonic welder

Through hole | SMT | Press-in | IDC | Soldering | Crimping | Wire wrapping | Others

# Dust-proof cap
# HDRA-E68( )-CP

RoHS

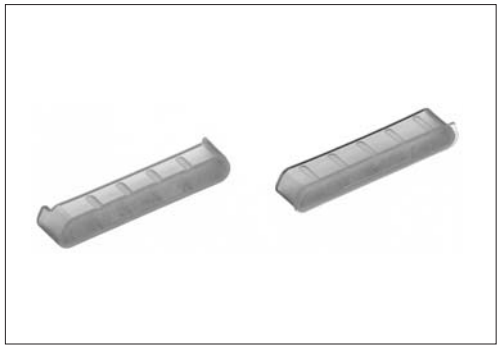

● **Configuration of product Part No.**

**HDRA- E 68 ( )- CP**
① ② ③ ④

① Series name
② No. of contacts: 68
③ M : For male connector
F : For female connector
④ Cap

**HDRA-E68M-CP**

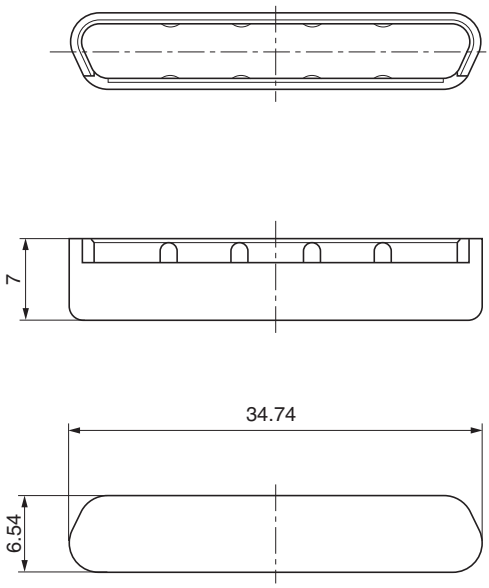


**HDRA-E68F-CP**

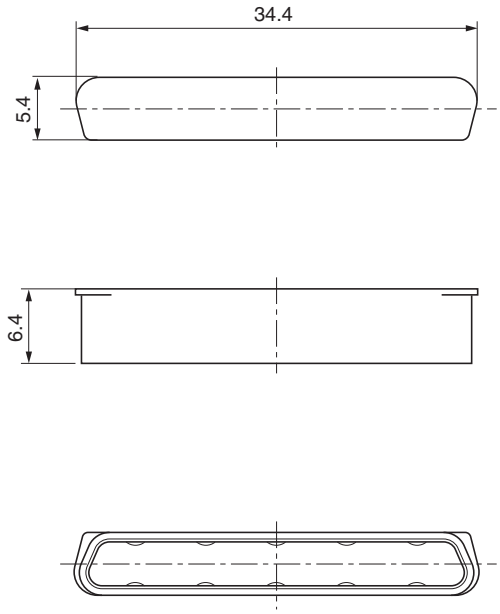


**For use with housings**: HDRA-E68LGKPC~F

HONDA TSUSHIN KOGYO CO., LTD.

**0.8 mm pitch connector**
**For PCBs**
**Straight DIP**
**EMI-filtered countermeasures**

# Straight DIP type female connector for PCBs
# HDRA-EC68FDT-( )+

RoHS

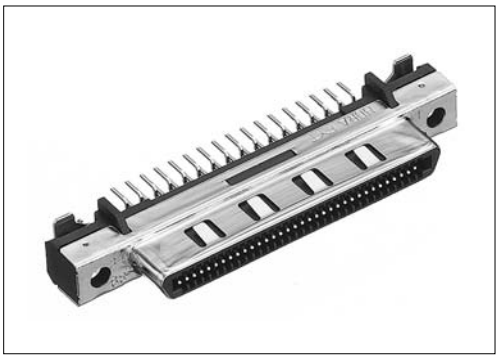

● **Configuration of product Part No.**

**HDRA- EC 68 FD T- ( )+**
① ② ③ ④ ⑤

① Series name
② No. of contacts: 68
③ Form of contact
FD: Straight, DIP type, female
④ With ground lock pin
⑤ Lock screw
SLD: Provided
Blank: None

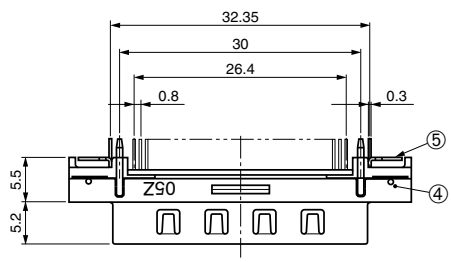


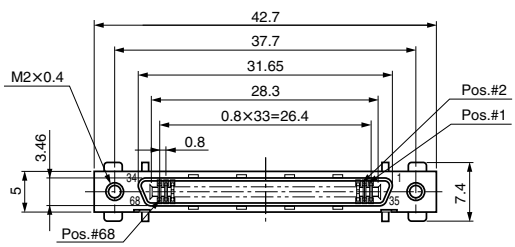


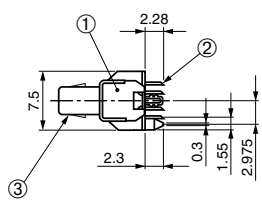


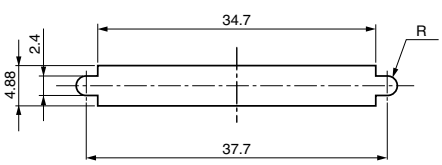


**Recommended panel cut-out dimensions**

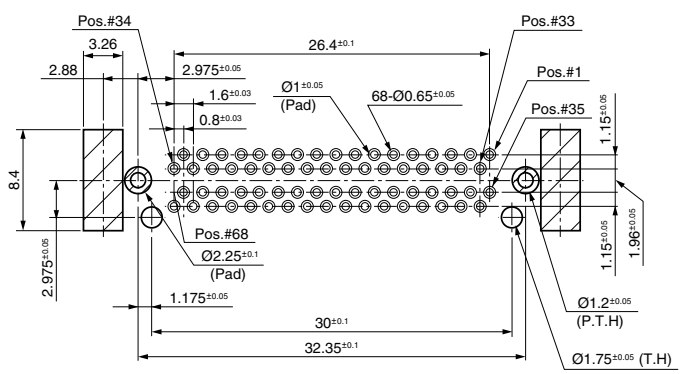


**Recommended PCB layout**

● **Components**

| | |
|---|---|
| ① | Insulator |
| ② | Contact |
| ③ | Shell |
| ④ | Sqr.nut |
| ⑤ | Hold down |

**Mating connector:** HDRA series male connectors

Dip | SMT | Press-in | IDC | Soldering | Crimping | Wire wrapping | Others

# Straight DIP type female connector for PCBs
# HDRA-EC100FDT-( )+

RoHS

**0.8 mm pitch connector**
**For PCBs**
**Straight DIP**
**EMI-filtered countermeasures**

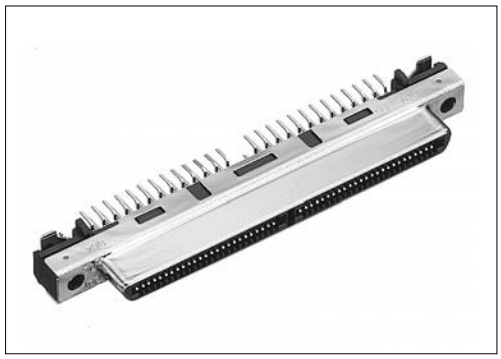

● **Configuration of product Part No.**

**HDRA- EC 100 FD T- ( )+**
① ② ③ ④ ⑤

① Series name
② No. of contacts: 100
③ Form of contact
FD: Straight, DIP type, female
④ With ground lock pin
⑤ Lock screw
SLD: Provided
Blank: None

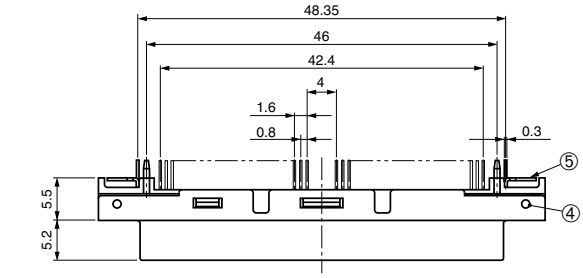


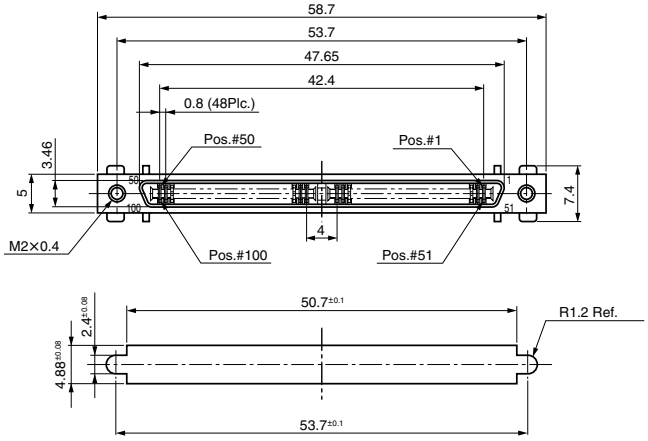


Recommended panel cut-out dimensions

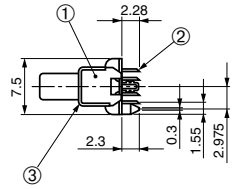


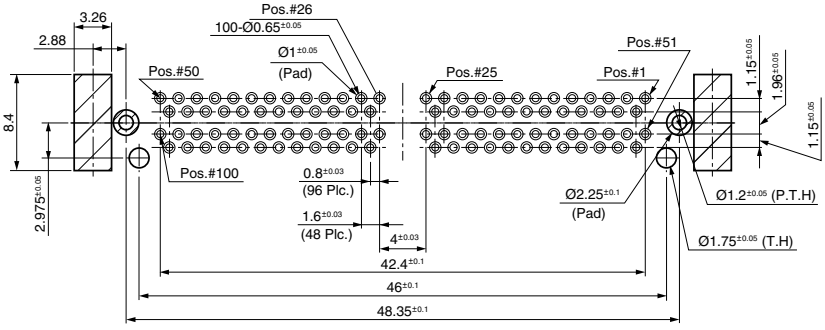


Recommended PCB layout

● **Components**

| | |
|---|---|
| ① | Insulator |
| ② | Contact |
| ③ | Shell |
| ④ | Sqr.nut |
| ⑤ | Hold down |

**Mating connector:** HDRA series, male connector