1608KL (40□x 20L)

NMB-MAT

EMINEBEA.COM

DC Axial Fans

General Specifications

Motor Protection:
Auto Restart/Polarity Protection

Insulation Resistance: 10M Ω or over with a DC500V Megger

Dielectric Withstand Voltage: AC 700V 1s

Allowable Ambient Temperature Range:
-10°C ~ +70°C (Operating)
-40°C ~ +70°C (Storage)
(non-condensing environment)

Expected Life

Failure Rate: 10%
25°C 50,000 Hours (L00)
25°C 40,000 Hours (T00)

Characteristic Curves

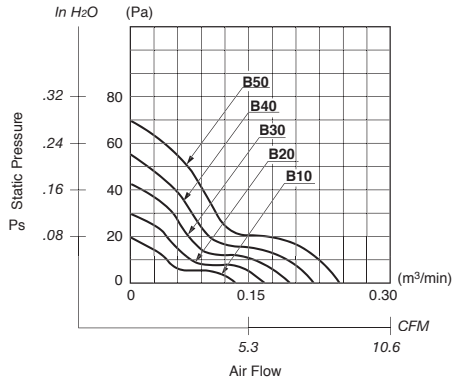

Outline

Units: inch (mm)

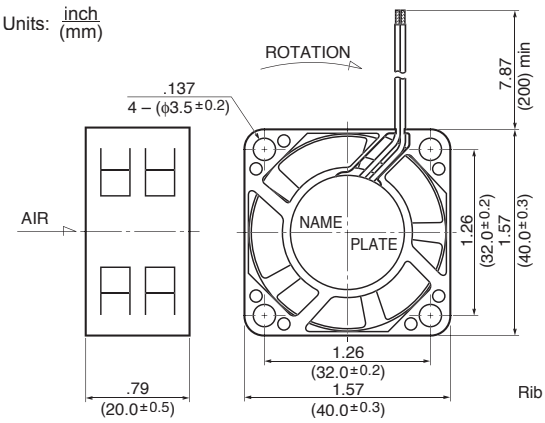

Rib Type Only

Panel Cut-outs

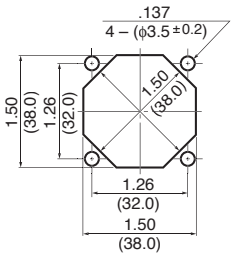

INLET SIDE / OUTLET SIDE

Material

Casing : Plastic (Black) 94V-0
Impeller : Plastic (Black) 94V-0
Bearing : Ball Bearing
Lead Wire : UL1061, AWG26, +Red, -Black

Specifications

MODEL		Rated Voltage	Operating Voltage	Current	Input Power	Speed	Max. Air Flow		Max. Static Pressure		Noise	Mass
	Product No.	(V)	(V)	(A)*1	(W)*1	(min-1)*1	CFM*1	(m3/min)*1	in H2O	(Pa)*1	(dB)*1	(g)
1608KL-01W-**B10**-	X00	5	4.5 ~ 5.5	0.07	0.35	4500	4.9	0.14	.08	20.0	20.0	25
1608KL-01W-**B20**-	X00	5	4.5 ~ 5.5	0.12	0.60	5500	6.0	0.17	.12	30.1	22.5	25
1608KL-01W-**B30**-	X00	5	4.5 ~ 5.5	0.17	0.85	6500	7.4	0.21	.17	42.2	25.5	25
1608KL-01W-**B40**-	X00	5	4.5 ~ 5.5	0.27	1.35	7500	8.4	0.24	.21	54.2	29.0	25
1608KL-01W-**B50**-	X00	5	4.5 ~ 5.5	0.38	1.90	8500	9.5	0.27	.28	69.4	33.0	25
1608KL-04W-**B10**-	X00	12	10.2 ~ 13.8	0.04	0.48	4500	4.9	0.14	.08	20.0	20.0	25
1608KL-04W-**B20**-	X00	12	10.2 ~ 13.8	0.06	0.72	5500	6.0	0.17	.12	30.1	22.5	25
1608KL-04W-**B30**-	X00	12	10.2 ~ 13.8	0.07	0.84	6500	7.4	0.21	.17	42.2	25.5	25
1608KL-04W-**B40**-	X00	12	10.2 ~ 13.8	0.09	1.08	7500	8.4	0.24	.21	54.2	29.0	25
1608KL-04W-**B50**-	X00	12	10.2 ~ 13.8	0.11	1.32	8500	9.5	0.27	.28	69.4	33.0	25
1608KL-05W-**B10**-	X00	24	20.0 ~ 25.2	0.04	0.96	4500	4.9	0.14	.08	20.0	20.0	25
1608KL-05W-**B20**-	X00	24	20.0 ~ 25.2	0.05	1.20	5500	6.0	0.17	.12	30.1	22.5	25
1608KL-05W-**B30**-	X00	24	20.0 ~ 25.2	0.06	1.44	6500	7.4	0.21	.17	42.2	25.5	25
1608KL-05W-**B40**-	X00	24	20.0 ~ 25.2	0.07	1.68	7500	8.4	0.24	.21	54.2	29.0	25
1608KL-05W-**B50**-	X00	24	20.0 ~ 25.2	0.08	1.92	8500	9.5	0.27	.28	69.4	33.0	25

Rotation: Clockwise Airflow Outlet: Air Out Over Struts *1: Average Values in Free Air