THIS DRAWING IS UNPUBLISHED. RELEASED FOR PUBLICATION - ,- .
© COPYRIGHT - By - ALL RIGHTS RESERVED.

LOC	DIST
CM	0

REVISIONS

P	LTR	DESCRIPTION	DATE	DWN	APVD
	G1	REVISED PER ECR-15-007038	28SEP2015	NK	PQ

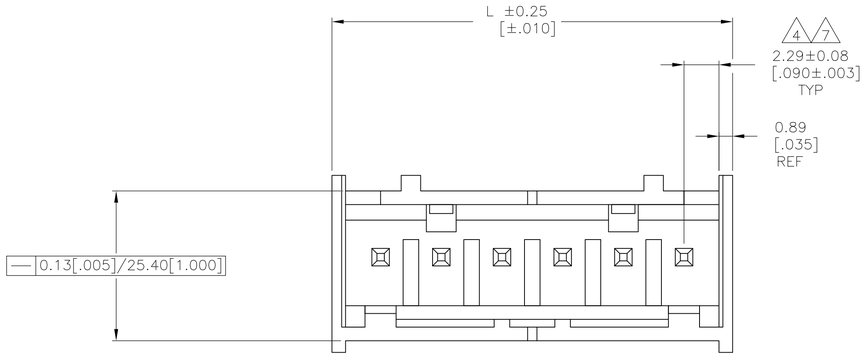

1. MATERIAL:
   HOUSING – THERMOPLASTIC POLYESTER,GLASS FILLED,UL94-0.
   POST – COPPER ALLOY
2. FINISH:
   HOUSING – BLACK
   POST – SEE NOTES 12 AND 13.

(3) POST TO WITHSTAND 3LBS (16N) MIN AXIAL FORCE IN THIS DIRECTION WITHOUT DISLODGING.

(4) APPLIES AT –A– .

(5) APPLIES WHEN HEADER IS STRAIGHT .

(6) PLASTIC PROJECTIONS PERMITTED IN THIS ZONE.

(7) COORDINATE DIMENSIONS APPLIES FROM CENTER OF ACTUAL FEATURE.

(8) SOLDER SIDE OF BOARD IS SHOWN.

(9) POST SOLDERTAIL MUST COMPLY WITH AMP SOLDERABILITY SPEC 109-11-2.

(10) LATCH DETENT FEATURE APPEARS 1 PLACE ON EACH END OF PART (MAX OF 2 PER PART) ON ALL POSITIONS 4 THRU 12. THE LATCH APPEARS ONLY ONE PLACE ON 2 & 3 POSITION PARTS.

11. DIMENSIONS IN BRACKETS ARE IN INCHES.

(12) MATTE TIN PLATE 0.00381 – 0.00889 [.000150 – .000350] THICK, OVER NICKEL UNDERPLATE 0.00127 [.000050] MIN THICK.

(13) MATTE TIN PLATE 0.00381 – 0.00889 [.000150 – .000350] THICK, OVER NICKEL UNDERPLATE 0.00127 [.000050] MIN THICK.

(14) OBSOLETE PARTS: OBSOLETE CIS STREAMLINING PER D.RENAUD/D.SINISI

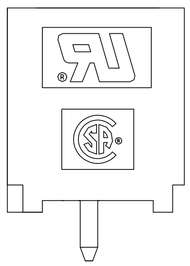

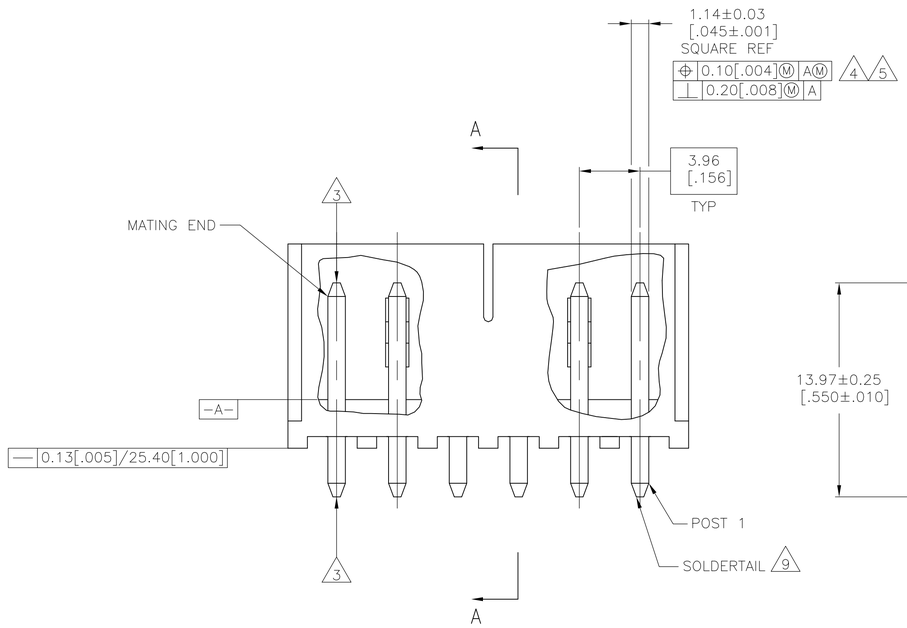

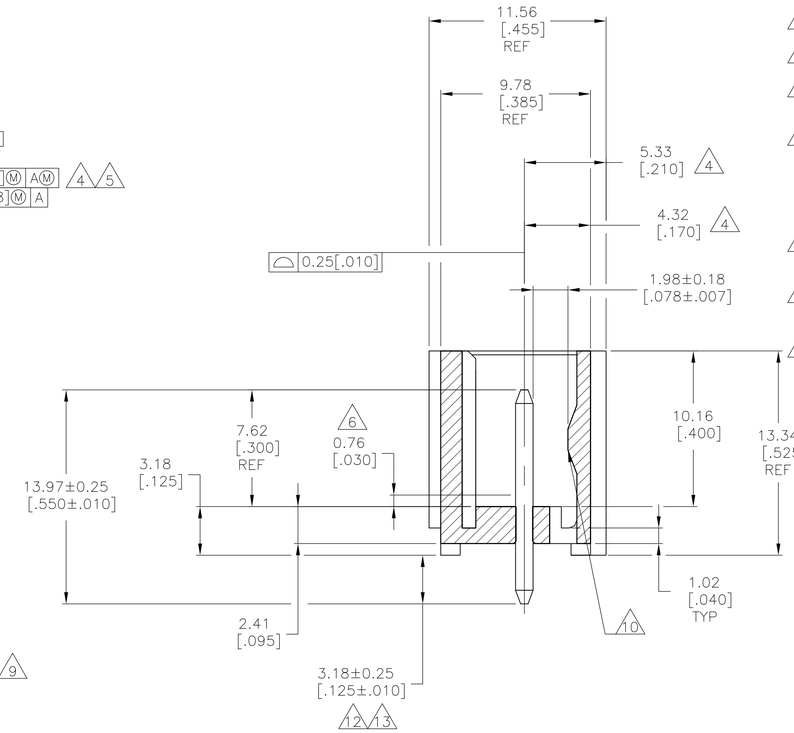

SECTION A–A

647123-6 SHOWN

	13	49.94	1.966	12	3-647123-2
		45.97	1.810	11	3-647123-1
		42.01	1.654	10	3-647123-0
		38.05	1.498	9	2-647123-9
		34.09	1.342	8	2-647123-8
		30.12	1.186	7	2-647123-7
		26.16	1.030	6	2-647123-6
		22.20	.874	5	2-647123-5
		18.24	.718	4	2-647123-4
		14.27	.562	3	2-647123-3
		10.31	.406	2	2-647123-2
OBSOLETE	12	49.94	1.966	12	~~1-647123-2~~
14 SUPERSEDED		45.97	1.810	11	~~1-647123-1~~
OBSOLETE		42.01	1.654	10	~~1-647123-0~~
OBSOLETE		38.05	1.498	9	~~647123-9~~
SUPERSEDED BY 2-647123-8		34.09	1.342	8	~~647123-8~~
OBSOLETE		30.12	1.186	7	~~647123-7~~
OBSOLETE		26.16	1.030	6	~~647123-6~~
OBSOLETE		22.20	.874	5	~~647123-5~~
OBSOLETE		18.24	.718	4	~~647123-4~~
OBSOLETE		14.27	.562	3	~~647123-3~~
OBSOLETE		10.31	.406	2	~~647123-2~~
	PLATING	MM	IN	NO. OF POSN	PART NUMBER
		L DIM			

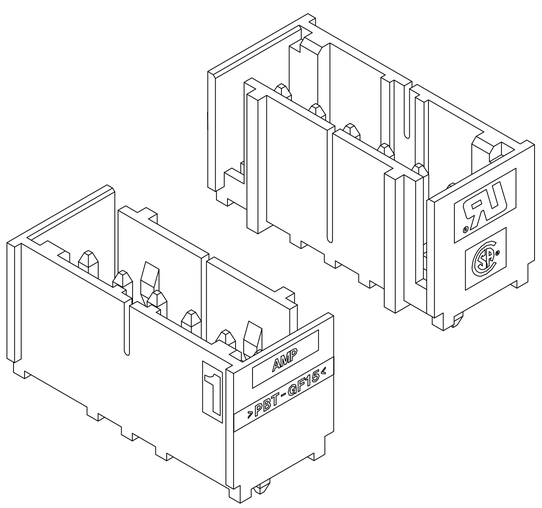

3-DIMENSIONAL MODEL
NTS

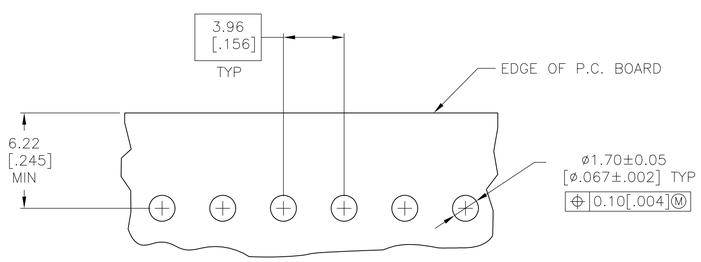

RECOMMENDED MOUNTING HOLE PATTERN
FOR 1.57[.062] THICK P.C. BOARD (8)

THIS DRAWING IS A CONTROLLED DOCUMENT.

DIMENSIONS: mm [INCHES]

TOLERANCES UNLESS OTHERWISE SPECIFIED:
0 PLC ± –
1 PLC ± –
2 PLC ± –
3 PLC ± –
4 PLC ± –
ANGLES ± –

MATERIAL –
FINISH –

DWN S CARPENTER 22JUL03
CHK D BOSSI 22JUL03
APVD D BOSSI 22JUL03

PRODUCT SPEC –
APPLICATION SPEC –
WEIGHT –

TE Connectivity

NAME: MTA-156 SHROUDED HEADER ASSEMBLY, STRAIGHT .045 SQUARE POST, TIN W/O RETENTION PEG

SIZE	CAGE CODE	DRAWING NO	RESTRICTED TO
A1	00779	C-647123	–

CUSTOMER DRAWING | SCALE 5:1 | SHEET 1 OF 1 | REV G1

4805 (3/11)