MATERIALS AND FINISHES:

BODY BRASS
PLATED GOLD

CENTER CONTACT BERYLLIUM COPPER
PLATED GOLD

INSULATOR TEFLON

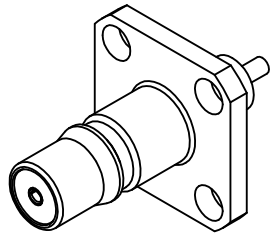

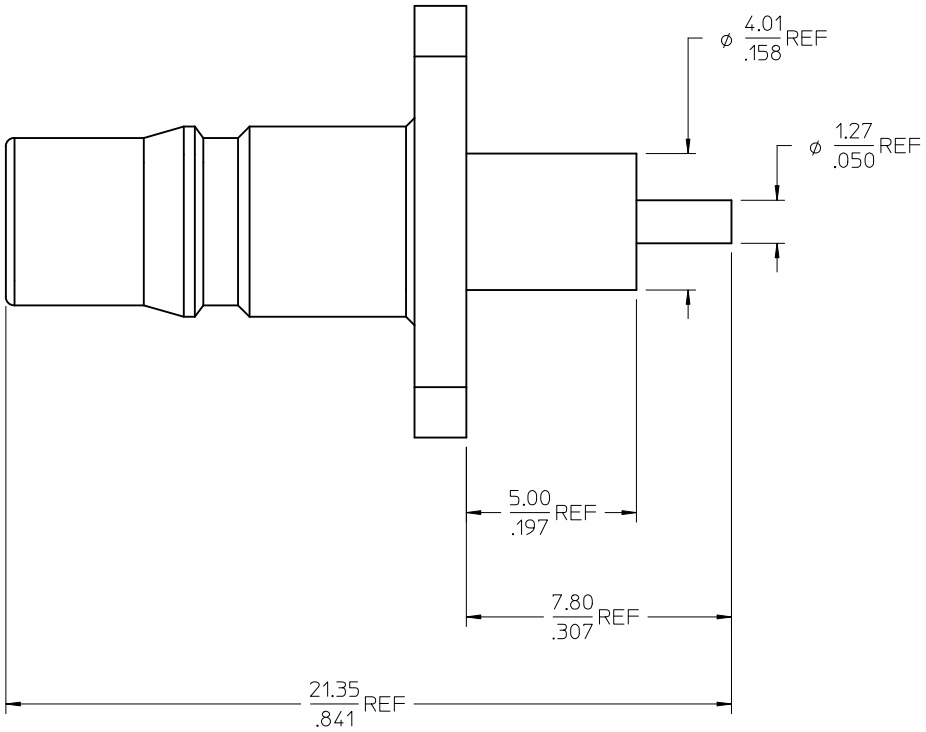

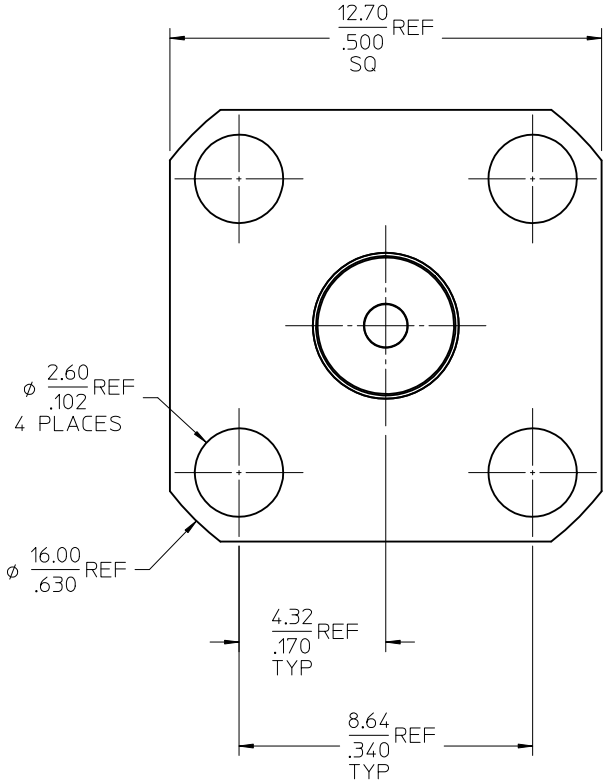

73254-0201	ONE PIECE 73254-0200 PER BAG
73254-0200	BULK
PART NO.	PACKAGING

PS-89675-1330	QMA
SPECIFICATION	DESCRIPTION

REV	DESCRIPTION
	CHG: CLARIFIED BAGGING. EC NO: URF2010-0369 DRWN:AROBERTSON 2009/12/18 CH'KD:SSS 2009/12/18 APPR: JWIENER 2009/12/18

A2

QUALITY SYMBOLS
▼=0
▽=0

GENERAL TOLERANCES (UNLESS SPECIFIED)

	mm	INCH
4 PLACES	± ---	± ---
3 PLACES	± ---	± ---
2 PLACES	± ---	± ---
1 PLACE	± ---	± ---
ANGULAR ± 2 °		

DRAFT WHERE APPLICABLE MUST REMAIN WITHIN DIMENSIONS

DIMENSION STYLE: MM/IN
SCALE
DESIGN UNITS: METRIC
THIRD ANGLE PROJECTION

DRAWN BY: JM DATE: 2004/10/11
CHECKED BY: SSS DATE: 2004/10/11
APPROVED BY DATE

TITLE: QMA JACK, STRAIGHT SQUARE FLANGE RECEPTACLE EWR-2606, QMA-JR

molex MOLEX INCORPORATED

MATERIAL NO.: SEE TABLE
DOCUMENT NO.: SD-73254-020
SHEET NO.: 1 OF 1
SIZE: C

THIS DRAWING CONTAINS INFORMATION THAT IS PROPRIETARY TO MOLEX INCORPORATED AND SHOULD NOT BE USED WITHOUT WRITTEN PERMISSION