THIS DRAWING IS UNPUBLISHED. RELEASED FOR PUBLICATION 2011
© COPYRIGHT 2011 Tyco Electronics AMP GmbH ALL RIGHTS RESERVED.

REVISIONS

P	LTR	DESCRIPTION	DATE	DWN	APVD
	A6	Drawing review ECR-12-018815	29OCT2012	MP	CV
	A7	ECR-13-011943	26JUL2013	MP	PSt
	A8	ECR-15-012070	13AUG2015	JB,JH	BK
	A9	ECR-16-014733	18OCT2016	GH	MP

1 VERSION WITH REDUCED MATING FORCE
Ausfuehrung mit reduzierter Steckkraft

2 SUITABLE FOR TABS 8x1.2mm AND 9.5x1.2mm
Geeignet fuer Flachstecker 8x1.2mm und 9.5x1.2mm

3 FOR CRITIZATION OF THE GAP-SIZE,
THE MATING-FORCE HAS PRIORITY
(<40N WITH TEST TAB ACC. TO PRODUCT SPEC).
Zur Beurteilung des Oeffnungsmasses
ist die Steckkraft ausschlagebend
(<40N mit der Pruefung tab nach produktspezifikation).

4 1-3 µm TIN LAYER FOR HIGHER TEMPERATURE REQUIREMENTS.
1-3 µm Zinnschicht fuer hoehere Temperaturanforderungen.

5 CONTACT ZONE SELECTIVE PRE-SILVER PLATED MIN. 3 µm; REST Ag FLASH
Kontaktzone selektiv voresilbert min. 3 µm; Rest Ag Blitz

VERSION A

(UNSEALED / ungedichtet)

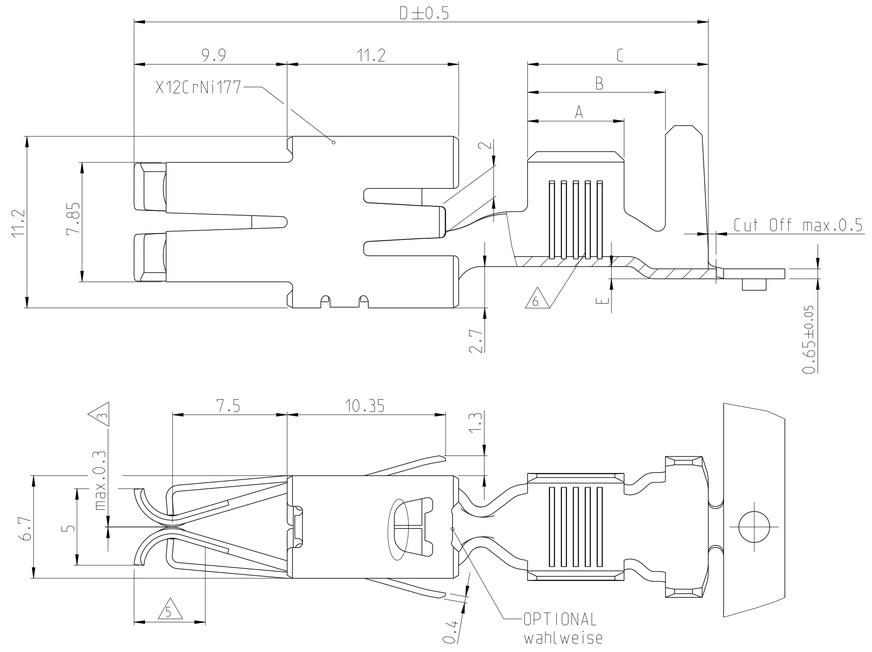

VERSION B

(SINGLE WIRE SEAL-SYSTEM / Einzel-Dichtungs-System)

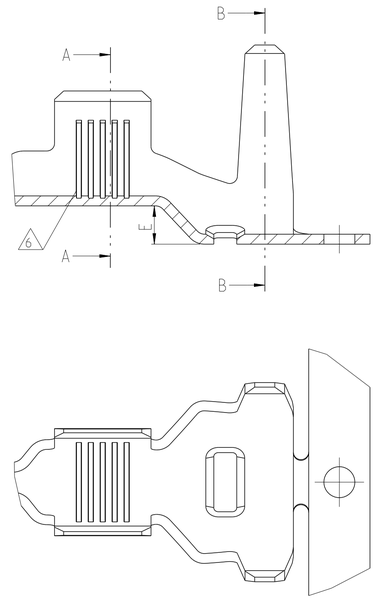

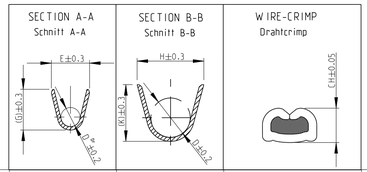

	PN STRIP FORM Bandware	REV.	MATERIAL Werkstoff	SURFACE Oberfloeche	NUMBER OF SERRATIONS Anzahl der Verzahnungen (6)	DGB WIRE RANGE [mm²]	INSULATION DIAMETER [mm]	STRIP FORM: WIRE CRIMP Drahtcrimp	STRIP FORM: INSUL.-CRIMP Isol.-Crimp	WIRE CRIMP HEIGHT CH Drahtcrimp-Hoehe CH	APPLICATION TOOL Anschlag-WKZ	HAND TOOL Handzange	A	B	C	D	E +0.25 -0.15
								CRIMP DIMENSION (mm) Crimpabmessungen (mm)			EXTRACTION TOOL Ausdrueckwerkzeug No.: 1-1579007-7						
VERSION B	-	-	-	-	-	- -	- -	- - -	- - -	- - -	- - -	-	-	-	-	-	-
	962938-1	F	CuNiSi	vorverzinnt PRETINNED	5	6.0-10.0	6.0-6.6 FLK	E=7.0 G=7.5 D_{DR}=3.7	H=13.0 K=13.0 D=9.5	10.0mm²=3.82 - 6.0mm²=3.20	680699 MQC-Applicator 2-878660-2	-	6.3	11.9	15.6	41	2.5
	962936-1	F	CuNiSi	vorverzinnt PRETINNED	4	4.0-6.0	4.7-5.2 FLK	E=5.6 G=5.9 D_{DR}=3.0	H=13.0 K=13.0 D=9.5	6.0mm²=3.08 4.0mm²=2.74	2151146 MQC-Applicator 2-878595-2	-	5.5	11.1	14.8	41	2.5
	962934-1	D	CuNiSi	vorverzinnt PRETINNED	4	>2.5-4.0	4.0-4.5 FLK	E=4.9 G=5.1 D_{DR}=2.3	H=13.0 K=13.0 D=9.5	4.0mm²=2.71 -	1855578 MQC-Applicator 2-878594-2	-	4.5	11.1	14.8	41	2.5
VERSION A	-	-	-	-	-	- -	- -	- - -	- - -	- - -	- -	-	-	-	-	-	-
	1-962932-6	A	CuNiSi	(4)	5	6.0-10.0	4.7-6.6 FLK	E=7.0 G=7.5 D_{DR}=3.7	H=9.2 K=10.0 D=5.9	10.0mm²=3.82 8.5mm²=3.59 6.5mm²=3.28 6.0mm²=3.20	2151285 MQC-Applicator 2-878659-2	734533-1 (only for 10mm²)	6.3	9.0	11.8	37.5	0.8
	962932-1	H	CuNiSi	vorverzinnt PRETINNED													
	1-962930-6	A	CuNiSi	(4)	4	4.0-6.0	4.0-5.2 FLK	E=5.6 G=5.9 D_{DR}=3.0	H=7.8 K=8.1 D=4.5	6.0mm²=3.08 5.5mm²=3.00 5.0mm²=2.91 4.0mm²=2.74	2151284 MQC-Applicator 1855532	734532-1 (only for 6mm²)	5.5	7.8	10.1	37.5	0.6
	962930-1	H	CuNiSi	vorverzinnt PRETINNED													
	962928-3	G	CuNiSi	(5)	4	>2.5-4.0	3.3-4.7 FLK	E=4.9 G=5.1 D_{DR}=2.3	H=6.9 K=7.2 D=4.0	4.0mm²=2.71 3.5mm²=2.62 3.0mm²=2.52 2.5mm²=2.42	2151492 MQC-Applicator 2-878592-2	734531-1	4.5	6.8	9.1	37.5	0.6
	962928-1	G	CuNiSi	vorverzinnt PRETINNED													

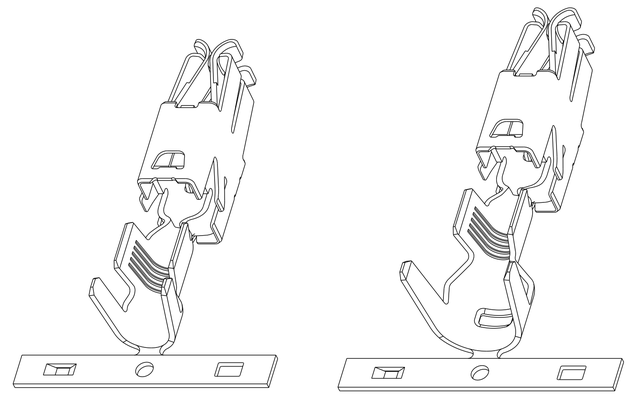

THIS DRAWING IS A CONTROLLED DOCUMENT.

DIMENSIONS: mm

TOLERANCES UNLESS OTHERWISE SPECIFIED: 0 PLC ±0.2mm; 1 PLC; 2 PLC; 3 PLC; 4 PLC; ANGLES ±2°; ISO 8015; ISO 2768-H -E

MATERIAL: SEE TABLE -

FINISH: SEE TABLE -

DWN 31JUL2000 M. Pfeilschifter
CHK 31JUL2000 V. Hunn
APVD 31JUL2000 M. Bleicher
PRODUCT SPEC 108-18047
APPLICATION SPEC 114-18075
WEIGHT -

TE Connectivity

NAME: MAXI POWER TIMER FOR 1.2MM TABS / MAXI POWER TIMER für 1.2mm TABs

SIZE A1 | CAGE CODE 00779 | DRAWING NO C-1355050 | RESTRICTED TO -

Customer Drawing | SCALE 5:1 | SHEET 1 OF 1 | REV A9