THIS DRAWING IS UNPUBLISHED. RELEASED FOR PUBLICATION , .SEP 2004
© COPYRIGHT 2004 By – ALL RIGHTS RESERVED.

REVISIONS

P	LTR	DESCRIPTION	DATE	DWN	APVD
	R	REVISED PER ECO-17-008763	23JAN2018	RG	SH

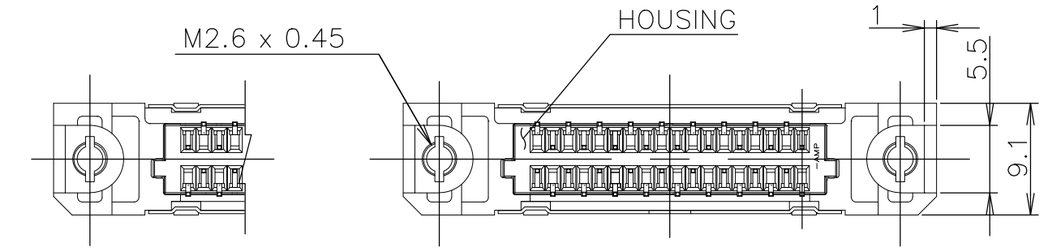

14,26,50 POSN

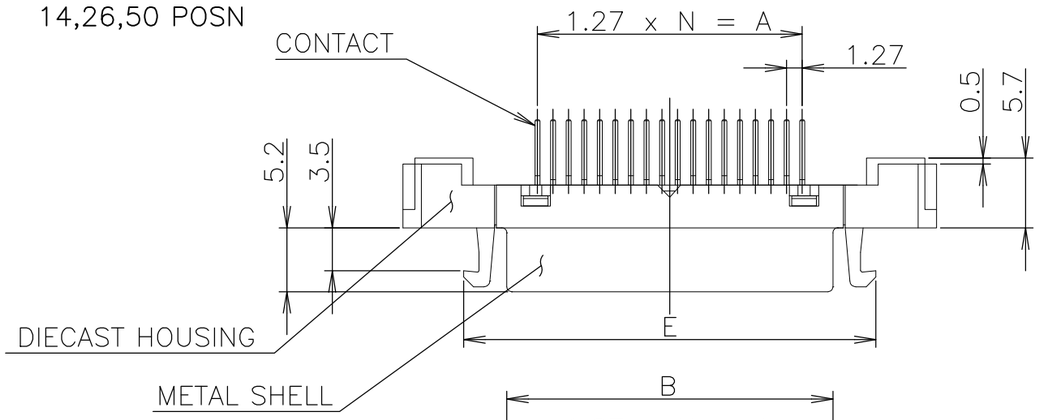

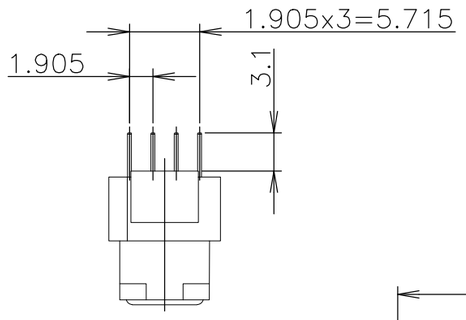

1 USED SCREW SIZE; M2.6 PANHEAD SCREW.
2 CONNECTOR TO BE MATED; 175677,5175751
3 MATERIAL AND FINISH;
* CONTACT; PHOS-BRONZE
FINISH: Au PLATING OVER Ni UNDER PLATING ON CONTACT AREA.
TIN PLATING OVER Ni UNDER PLATING ON SOLDER TINE AREA.
* METAL SHELL: STEEL
FINISH: Ni PLATING OVER COPPER UNDER PLATING.
* DIECAST HOUSING; ZINC
FINISH:Ni PLATING OVER COPPER UNDER PLATING.
* HOUSING; THERMOPLASTIC,UL94V-0,BLACK
4 RECOMMEND P.W.B THICKNESS; 1.6mm

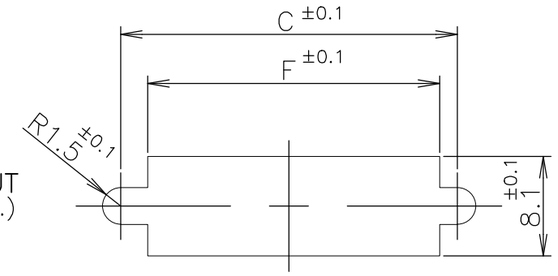

PANEL CUTOUT
(THK; 2mm MAX.)
FIG-2

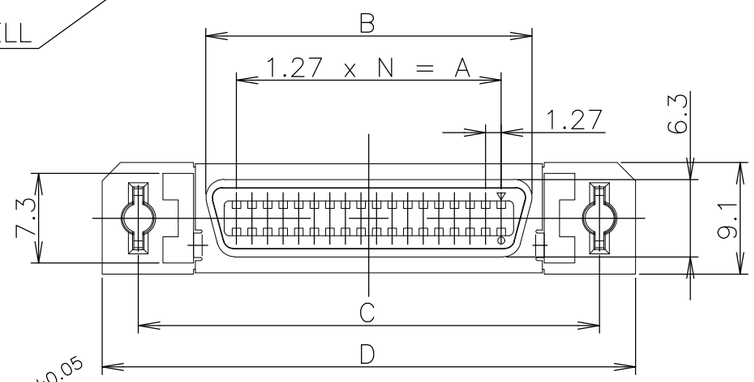

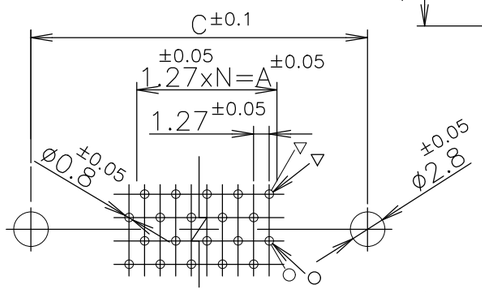

(APPLIED 20,36,68,80,100POSN)

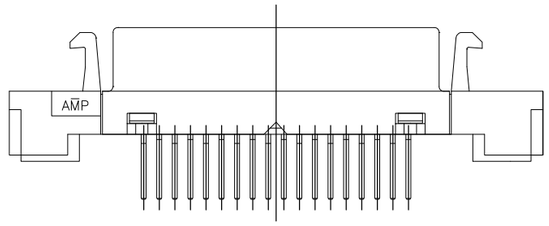

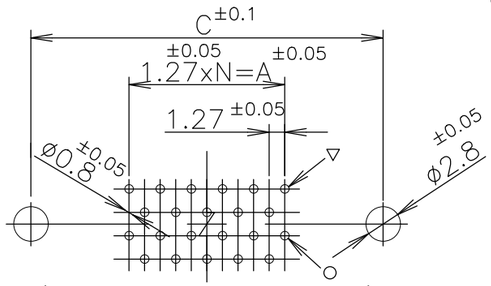

(APPLIED 14,26,50POSN)
RECOMMEND P.W.B HOLE LAYOUT
(CONNECTOR MOUNTING SIDE)
FIG-1

LEAD FREE

OBSOLETED	0.00076	~~39~~	~~61.90~~	~~61.55~~	~~71.45~~	~~65.55~~	~~54.53~~	~~49.53~~	~~80~~	~~3-5175887-0~~
		49	74.60	74.25	84.15	78.25	67.23	62.23	100	2-5175887-9
		33	54.20	53.93	63.83	57.93	46.91	41.91	68	2-5175887-8
		24	42.80	42.50	52.40	46.50	35.48	30.48	50	2-5175887-7
		17	33.90	33.61	43.51	37.61	26.59	21.59	36	2-5175887-5
OBSOLETED		~~12~~	~~27.60~~	~~27.26~~	~~37.16~~	~~31.26~~	~~20.24~~	~~15.24~~	~~26~~	~~2-5175887-4~~
OBSOLETED		~~9~~	~~23.80~~	~~23.45~~	~~33.35~~	~~27.45~~	~~16.43~~	~~11.43~~	~~20~~	~~2-5175887-2~~
OBSOLETED		~~6~~	~~19.90~~	~~19.64~~	~~29.54~~	~~23.64~~	~~12.62~~	~~7.62~~	~~14~~	~~2-5175887-1~~
	0.0003	39	61.90	61.55	71.45	65.55	54.53	49.53	80	1-5175887-0
		49	74.60	74.25	84.15	78.25	67.23	62.23	100	5175887-9
OBSOLETED		~~33~~	~~54.20~~	~~53.93~~	~~63.83~~	~~57.93~~	~~46.91~~	~~41.91~~	~~68~~	~~5175887-8~~
		24	42.80	42.50	52.40	46.50	35.48	30.48	50	5175887-7
		17	33.90	33.61	43.51	37.61	26.59	21.59	36	5175887-5
		12	27.60	27.26	37.16	31.26	20.24	15.24	26	5175887-4
OBSOLETED		~~9~~	~~23.80~~	~~23.45~~	~~33.35~~	~~27.45~~	~~16.43~~	~~11.43~~	~~20~~	~~5175887-2~~
OBSOLETED		~~6~~	~~19.90~~	~~19.64~~	~~29.54~~	~~23.64~~	~~12.62~~	~~7.62~~	~~14~~	~~5175887-1~~
	AU PLATING	N	F	E	D	C	B	A	POSN	PART NO.

THIS DRAWING IS A CONTROLLED DOCUMENT.

DIMENSIONS: mm

TOLERANCES UNLESS OTHERWISE SPECIFIED:
0 PLC ± 0.2
1 PLC ± 0.2
2 PLC ± 0.2
3 PLC ± 0.2
4 PLC ± 0.2
ANGLES ± 3°

MATERIAL SEE NOTE 3
FINISH SEE NOTE 3

DWN COREL WANG 01SEP04
CHK STEVEN YAO 01SEP04
APVD I.ENOMOTO 01SEP04
PRODUCT SPEC 108-60043
APPLICATION SPEC
WEIGHT 0.000000

TE Connectivity Ltd.

NAME
REC HEADER ASSY, VERTICAL
CHAMP .050 SERIES (II) STD-TYPE (M2.6)

SIZE A3 | CAGE CODE 00779 | DRAWING NO C-5175887 | RESTRICTED TO

CUSTOMER DRAWING | SCALE 2:1 | SHEET 1 OF 1 | REV R