THIS DRAWING IS UNPUBLISHED. RELEASED FOR PUBLICATION -,- .
© COPYRIGHT - BY TYCO ELECTRONICS CORPORATION. ALL INTERNATIONAL RIGHTS RESERVED.

LOC	DIST
AG	53

REVISIONS

P	LTR	DESCRIPTION	DATE	DWN	APVD
	E	REVISED PER ECO-09-026264	25MAR2010	HMR	DB

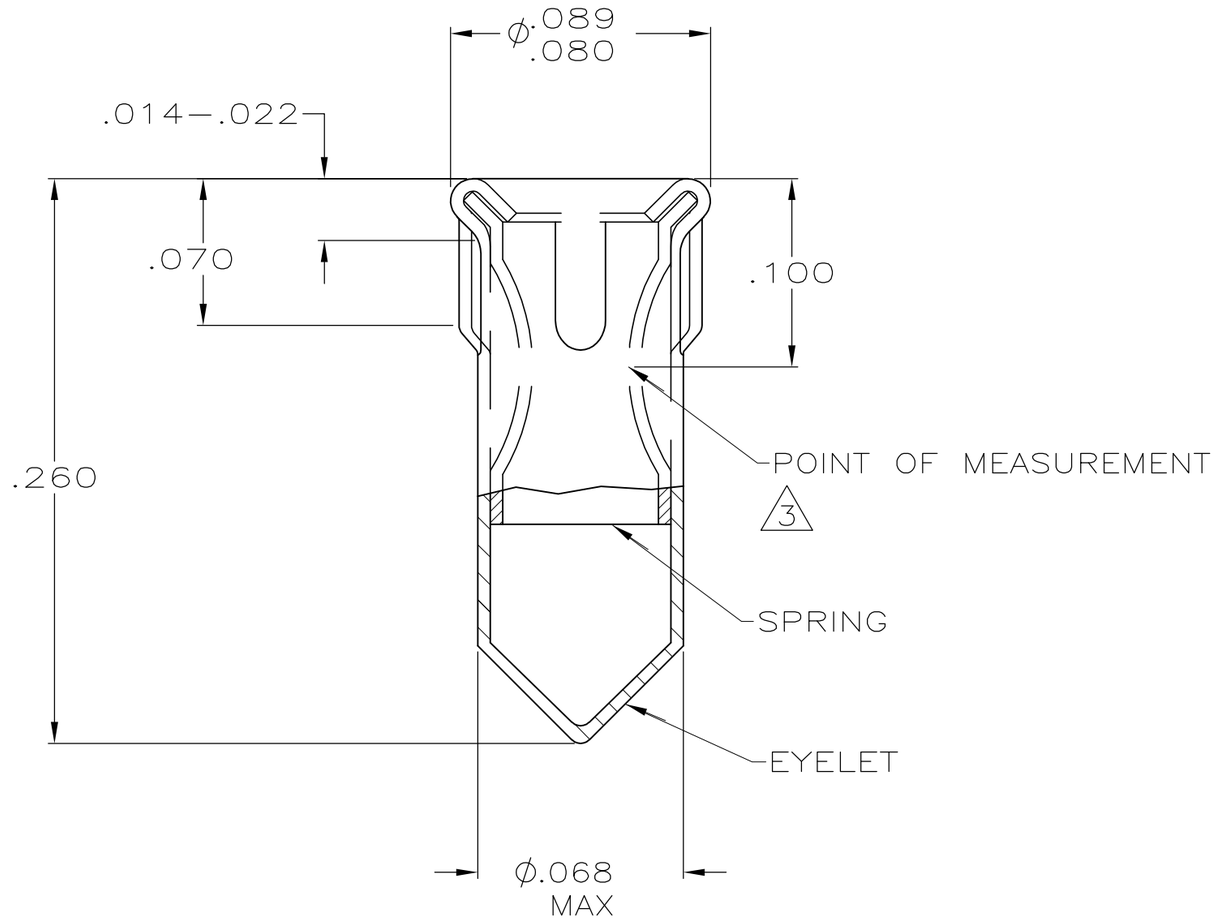

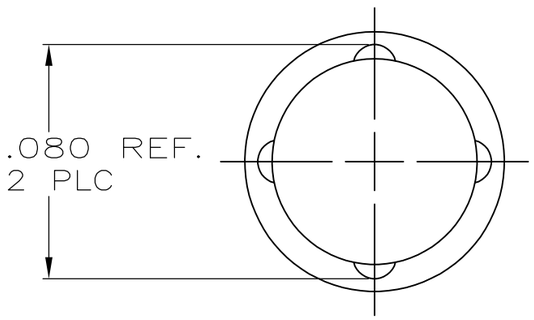

1. MATERIAL: EYELET-COPPER (QQ-C-533)
SPRING-BERYLLIUM COPPER (QQ-C-576).

2. TIN PL. .000150 MIN THK

3. NICKEL UNDERPLATE ALL OVER, MATING SURFACE PLATED TO MEET PERFORMANCE REQUIREMENTS OF TYCO PRODUCT SPECIFICATION 108-14008.

4. RECOMMENDED HOLE SIZE FOR MACHINE INSERTION .069-.075

5. TIN PLATE .000100 MIN THK

6. TIN-LEAD PLATE .000150 MIN THK

	PIN DIA	PIN LENGTH	FINISH SPRING	FINISH EYELET	PART NUMBER
	.037-.041	.100-.210	3	6	645500-3
	.037-.041	↑	NOTE 5	↑	645500-2
OBSOLETE	.037-.041	.100-.210	NOTE 3	NOTE 2	645500-1

THIS DRAWING IS A CONTROLLED DOCUMENT.

DIMENSIONS: INCHES

TOLERANCES UNLESS OTHERWISE SPECIFIED:
0 PLC ± -
1 PLC ± -
2 PLC ± -
3 PLC ± .010
4 PLC ± -
ANGLES ± -

MATERIAL -

FINISH SEE TABLE

DWN L.A. McEACHIN 24-JUN-99
CHK G.S. RIDGILL 19-JUL-99
APVD G.S. RIDGILL 19-JUL-99
PRODUCT SPEC —
APPLICATION SPEC —
WEIGHT —

Tyco Electronics
Tyco Electronics Corporation
Harrisburg, PA 17105-3608

NAME SOCKET, MSS, SERIES 4
—

SIZE	CAGE CODE	DRAWING NO	RESTRICTED TO
A3	00779	C-645500	—

CUSTOMER DRAWING | SCALE NTS | SHEET 1 OF 1 | REV E

1470-19 (1/08)