THIS DRAWING IS UNPUBLISHED. RELEASED FOR PUBLICATION 20
© COPYRIGHT 20 BY - ALL RIGHTS RESERVED.

LOC	DIST
FX	00

REVISIONS

P	LTR	DESCRIPTION	DATE	DWN	APVD
	B2	REVISED PER ECO-11-005030	12MAR2011	RK	HMR

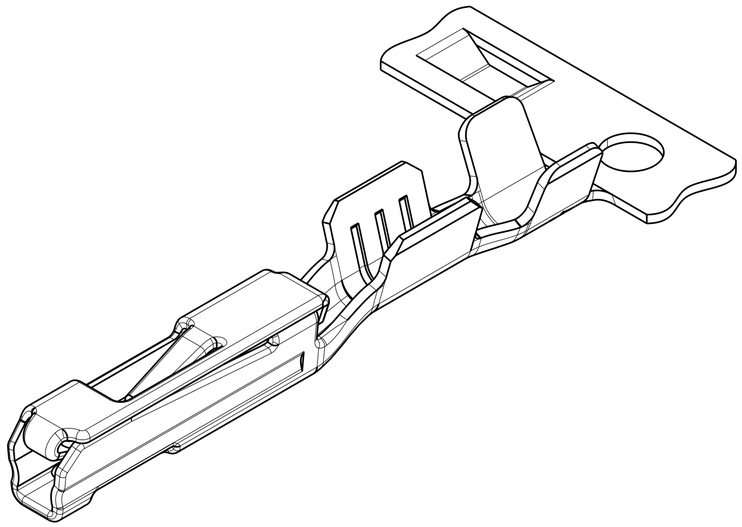

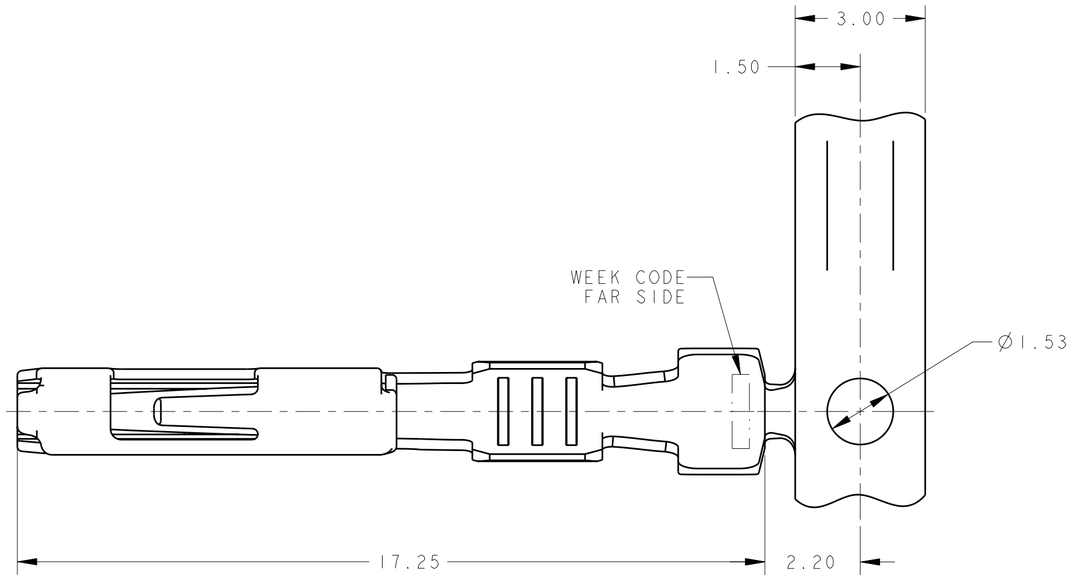

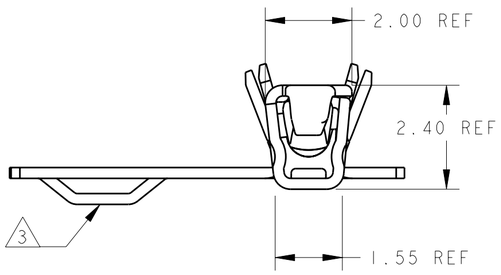

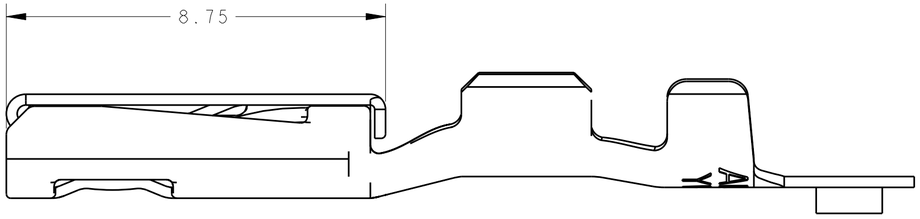

1. FINISH: PLATED 0.001 MIN THICK TIN.
2. PART LUBRICATED WITH ANTI-FRETTING LUBRICANT, MSDS 125-6344
3. FEATURE ON CARRIER STRIP IS DEPRESSED ON TIN PLATED PRODUCT. FEATURE APPEARS ADJACENT TO EVERY OTHER CONTACT MIN.
4. SEE FIGURE 1 FOR REELING DIRECTION.
5. SEE FIGURE 2 FOR REELING DIRECTION.
6. FOR LEVER ASSISTED CONNECTORS WITH SIDE SLIDE ACTION THE ALLOWABLE WIRE BRUSH LENGTH RANGE IS 0.10-0.70MM.

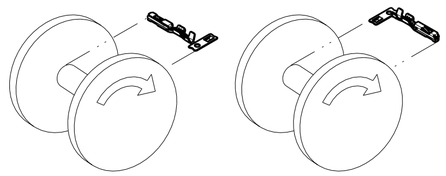

FIGURE 1 FIGURE 2

REELING DIRECTION OFF TOP OF REEL

REELING	WIRE SIZE	PART NUMBER
5	22	638551-4
	18-20	638551-3
4	22	638551-2
	18-20	638551-1

THIS DRAWING IS A CONTROLLED DOCUMENT.

DIMENSIONS: mm

TOLERANCES UNLESS OTHERWISE SPECIFIED:
0 PLC ±-
1 PLC ±-
2 PLC ±0.20
3 PLC ±-
4 PLC ±-
ANGLES ±3°

MATERIAL: 0.25 THK COPPER ALLOY

FINISH: 1 -

DWN J R SHUEY 02SEP99
CHK J M MYER 02SEP99
APVD K DENLINGER 02SEP99
PRODUCT SPEC 108-2220
APPLICATION SPEC 114-13006
WEIGHT -

TE Connectivity

NAME: CONTACT, FEMALE, 0.64mm TIN PLATED

SIZE	CAGE CODE	DRAWING NO	RESTRICTED TO
A2	00779	C-638551	-

CUSTOMER DRAWING | SCALE 10:1 | SHEET 1 OF 1 | REV B2

1471-9 (3/11)

Pro/ENGINEER DRAWING