PART NAME	NEMA 4X ENCLOSURE	PART No.	PN-1344, PN-1344-C AND PN-1344-DG	REV. DATE	11-17-08

INDUSTRY STANDARDS:

POLYCARBONATE (LIGHT GRAY AND CLEAR)
- UL94-HB FLAMMABILITY RATING (UL FILE #E41613)
- UV STABILIZED
- SERVICE TEMPERATURE RANGE: -40°C TO +120°C

ABS (DARK GRAY)
- UL94-HB FLAMMABILITY RATING (UL FILE #E56070)
- SERVICE TEMPERATURE RANGE: -40°C TO +80°C

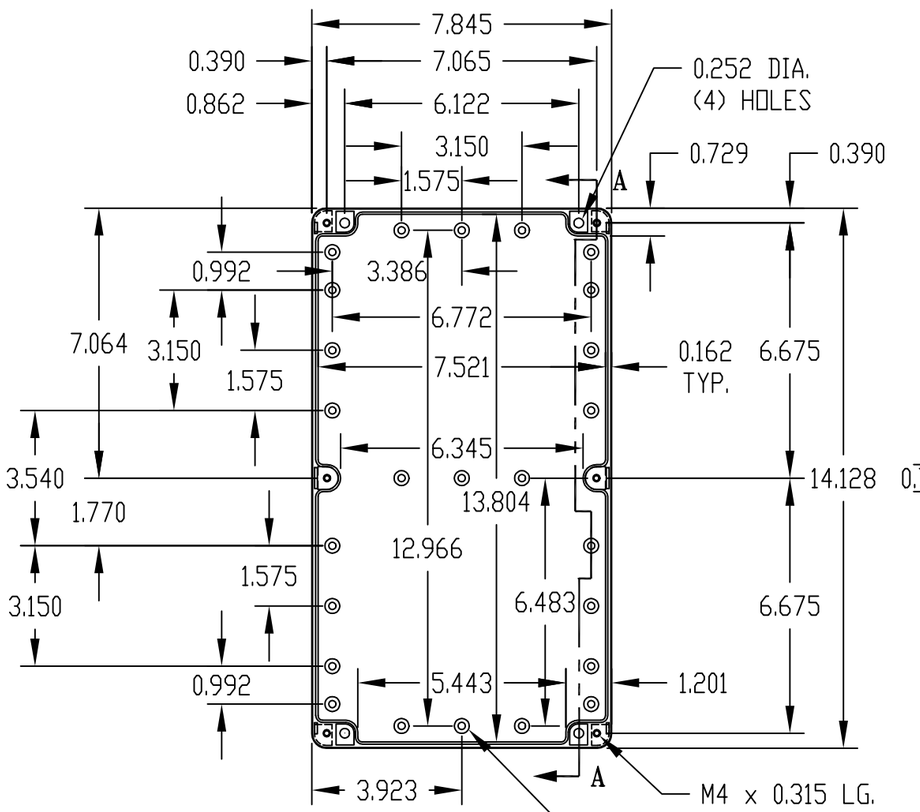

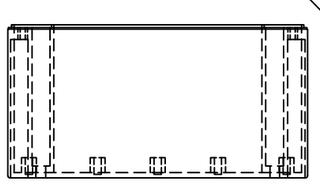

BODY

0.390 DIA. BOSS WITH
0.190 DIA. HOLE x 0.435 DEEP
(25) PLACES
MOUNTING BOSSES USE EITHER
M5 METRIC OR #12 STD. SHEET
METAL SCREWS x 0.312 LG.
(NOT SUPPLIED)

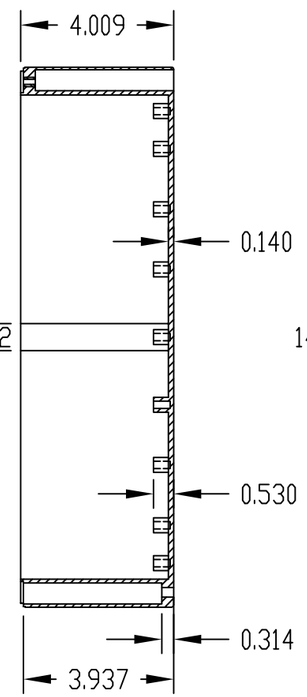

SECTION "A-A"

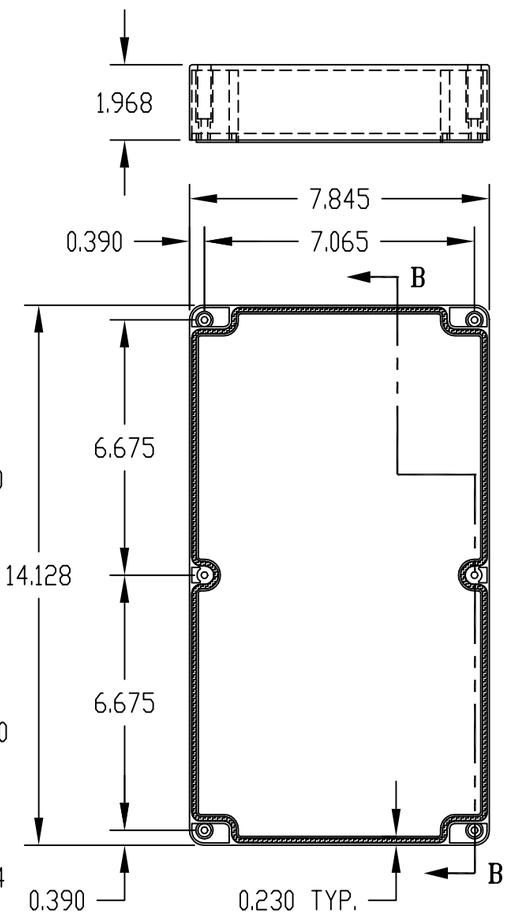

COVER

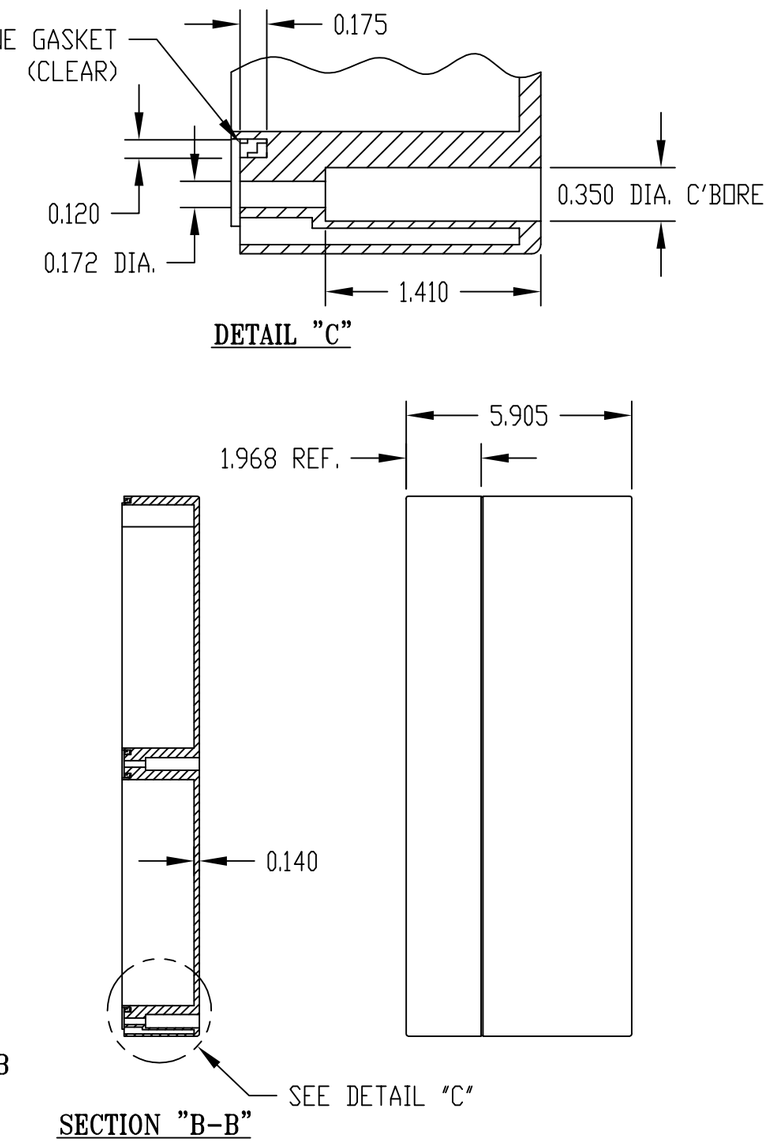

SECTION "B-B"

NOTE: ALL DIMENSIONS HAVE ±0.015 TOLERANCE UNLESS OTHERWISE SPECIFIED.

PART NUMBER	MATERIAL		FINISH		HARDWARE KIT
	BODY	COVER	BODY	COVER	
PN-1344	POLYCARBONATE		LIGHT GRAY		KIT CONTAINS (6) M4 x 25mm (1.000") LG. SCREWS FOR ASSEMBLY
PN-1344-C	POLYCARBONATE		LIGHT GRAY	CLEAR	
PN-1344-DG	HIGH-IMPACT ABS		DARK GRAY		