Features

- Compatible with MCS®51 Products
- 8K Bytes of In-System Reprogrammable Downloadable Flash Memory
  - SPI Serial Interface for Program Downloading
  - Endurance: 1,000 Write/Erase Cycles
- 2K Bytes EEPROM
  - Endurance: 100,000 Write/Erase Cycles
- 2.7V to 6V Operating Range
- Fully Static Operation: 0 Hz to 12 MHz
- Three-Level Program Memory Lock
- 256 x 8 bit Internal RAM
- 32 Programmable I/O Lines
- Three 16 bit Timer/Counters
- Nine Interrupt Sources
- Programmable UART Serial Channel
- SPI Serial Interface
- Low Power Idle and Power Down Modes
- Interrupt Recovery From Power Down
- Programmable Watchdog Timer
- Dual Data Pointer
- Power Off Flag

Description

The AT89LS8252 is a low-power, wide-voltage range, high-performance CMOS 8-bit microcomputer with 8K bytes of Downloadable Flash programmable and erasable read only memory and 2K bytes of EEPROM. The device is manufactured using Atmel's high density nonvolatile memory technology and is compatible with the industry standard 80C51 instruction set and pinout. The on-chip Downloadable Flash allows the program memory to be reprogrammed in-system through an SPI serial interface or by a conventional nonvolatile memory programmer. By combining a versatile 8-bit CPU with Downloadable Flash on a monolithic chip, the Atmel AT89LS8252 is a powerful microcomputer which provides a highly flexible and cost effective solution to many embedded control applications.

The AT89LS8252 provides the following standard features: 8K bytes of Downloadable Flash, 2K bytes of EEPROM, 256 bytes of RAM, 32 I/O lines, programmable watchdog timer, two Data Pointers, three 16-bit timer/counters, a six-vector two-level interrupt architecture, a full duplex serial port, on-chip oscillator, and clock circuitry. In addition, the AT89LS8252 is designed with static logic for operation down to zero frequency and supports two software selectable power saving modes. The Idle Mode stops the CPU while allowing the RAM, timer/counters, serial port, and interrupt system to continue functioning. The Power Down Mode saves the RAM contents but freezes the oscillator, disabling all other chip functions until the next interrupt or hardware reset.

The Downloadable Flash can be changed a single byte at a time and is accessible through the SPI serial interface. Holding RESET active forces the SPI bus into a serial programming interface and allows the program memory to be written to or read from unless Lock Bit 2 has been activated.

8-Bit Microcontroller with 8K Bytes Flash

AT89LS8252

Not Recommended for New Designs. Use AT89S8253.

0850C–MICRO–3/06

Pin Configurations

PDIP

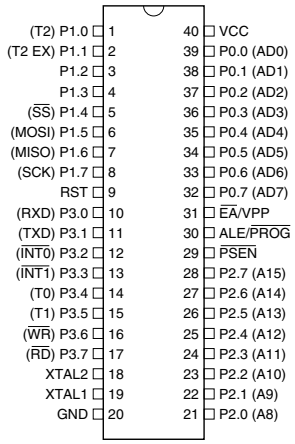

PLCC

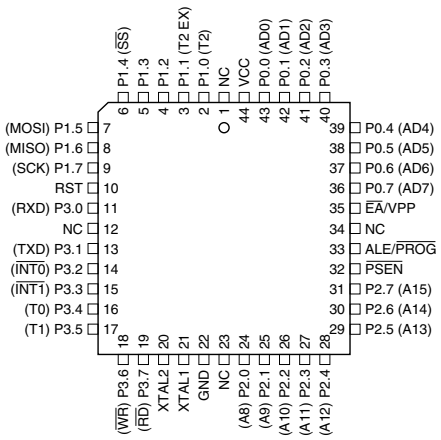

TQFP

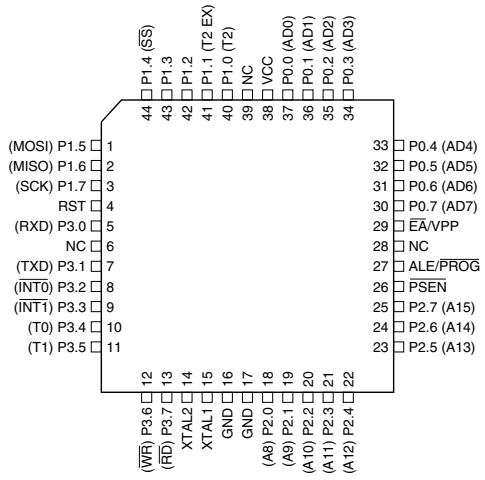

Pin Description

V_{CC}

Supply voltage.

GND

Ground.

Port 0

Port 0 is an 8-bit open drain bidirectional I/O port. As an output port, each pin can sink eight TTL inputs. When 1s are written to port 0 pins, the pins can be used as high-impedance inputs.

Port 0 can also be configured to be the multiplexed low-order address/data bus during accesses to external program and data memory. In this mode, P0 has internal pullups.

Port 0 also receives the code bytes during Flash programming and outputs the code bytes during program verification. External pullups are required during program verification.

Port 1

Port 1 is an 8-bit bidirectional I/O port with internal pullups. The Port 1 output buffers can sink/source four TTL inputs. When 1s are written to Port 1 pins, they are pulled high by the internal pullups and can be used as inputs. As inputs, Port 1 pins that are externally being pulled low will source current (I_{IL}) because of the internal pullups.

Some Port 1 pins provide additional functions. P1.0 and P1.1 can be configured to be the timer/counter 2 external count input (P1.0/T2) and the timer/counter 2 trigger input (P1.1/T2EX), respectively.

Block Diagram

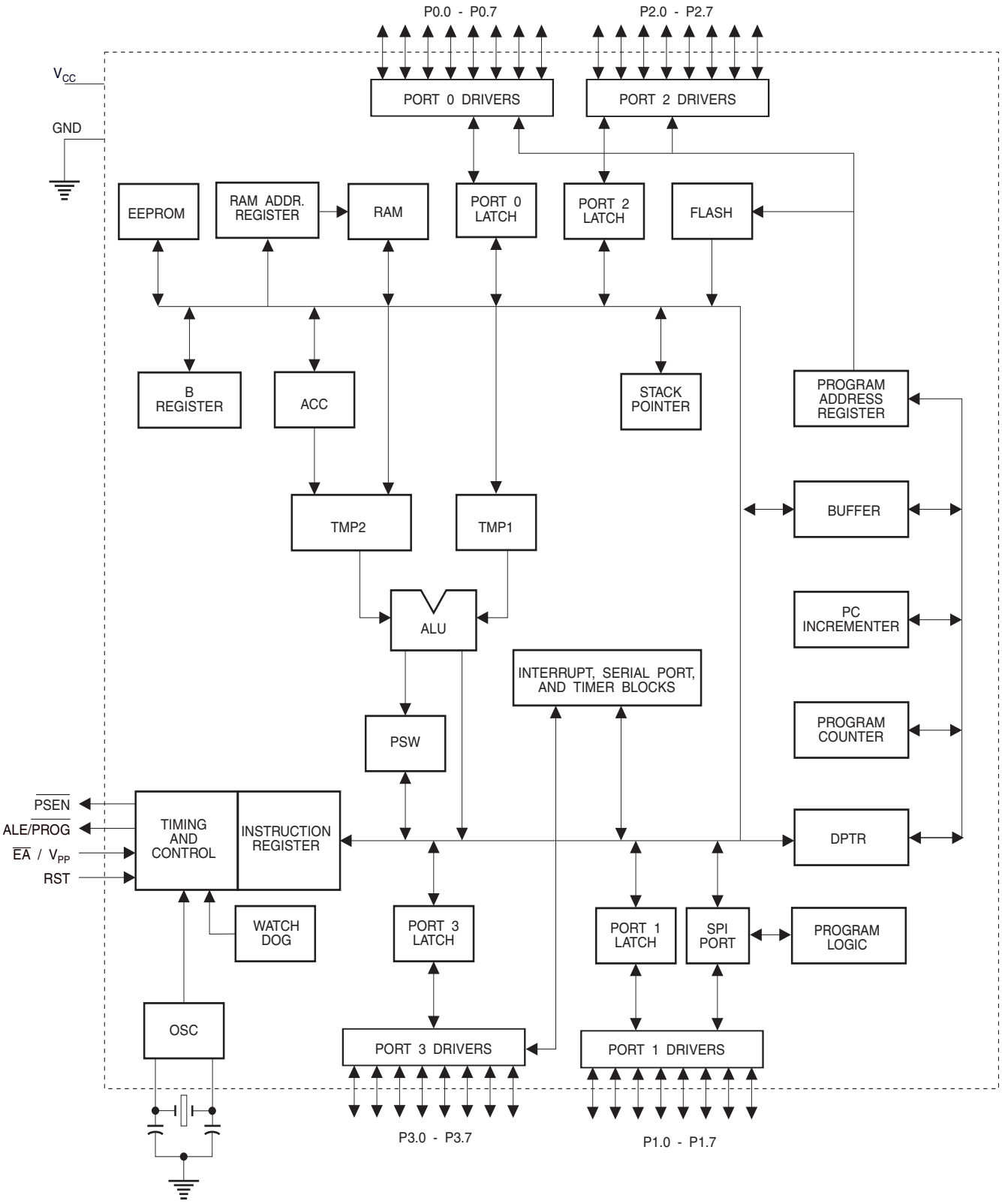

Pin Description

Furthermore, P1.4, P1.5, P1.6, and P1.7 can be configured as the SPI slave port select, data input/output and shift clock input/output pins as shown in the following table.

Port Pin	Alternate Functions
P1.0	T2 (external count input to Timer/Counter 2), clock-out
P1.1	T2EX (Timer/Counter 2 capture/reload trigger and direction control)
P1.4	$\overline{SS}$ (Slave port select input)
P1.5	MOSI (Master data output, slave data input pin for SPI channel)
P1.6	MISO (Master data input, slave data output pin for SPI channel)
P1.7	SCK (Master clock output, slave clock input pin for SPI channel)

Port 1 also receives the low-order address bytes during Flash programming and verification.

Port 2

Port 2 is an 8-bit bidirectional I/O port with internal pullups. The Port 2 output buffers can sink/source four TTL inputs. When 1s are written to Port 2 pins, they are pulled high by the internal pullups and can be used as inputs. As inputs, Port 2 pins that are externally being pulled low will source current (I_{IL}) because of the internal pullups.

Port 2 emits the high-order address byte during fetches from external program memory and during accesses to external data memory that use 16-bit addresses (MOVX @ DPTR). In this application, Port 2 uses strong internal pullups when emitting 1s. During accesses to external data memory that use 8-bit addresses (MOVX @ RI), Port 2 emits the contents of the P2 Special Function Register.

Port 2 also receives the high-order address bits and some control signals during Flash programming and verification.

Port 3

Port 3 is an 8 bit bidirectional I/O port with internal pullups. The Port 3 output buffers can sink/source four TTL inputs. When 1s are written to Port 3 pins, they are pulled high by the internal pullups and can be used as inputs. As inputs, Port 3 pins that are externally being pulled low will source current (I_{IL}) because of the pullups.

Port 3 also serves the functions of various special features of the AT89LS8252, as shown in the following table.

Port 3 also receives some control signals for Flash programming and verification.

Port Pin	Alternate Functions
P3.0	RXD (serial input port)
P3.1	TXD (serial output port)
P3.2	$\overline{INT0}$ (external interrupt 0)
P3.3	$\overline{INT1}$ (external interrupt 1)
P3.4	T0 (timer 0 external input)
P3.5	T1 (timer 1 external input)
P3.6	$\overline{WR}$ (external data memory write strobe)
P3.7	$\overline{RD}$ (external data memory read strobe)

RST

Reset input. A high on this pin for two machine cycles while the oscillator is running resets the device.

ALE/$\overline{PROG}$

Address Latch Enable is an output pulse for latching the low byte of the address during accesses to external memory. This pin is also the program pulse input ($\overline{PROG}$) during Flash programming.

In normal operation, ALE is emitted at a constant rate of 1/6 the oscillator frequency and may be used for external timing or clocking purposes. Note, however, that one ALE pulse is skipped during each access to external data memory.

If desired, ALE operation can be disabled by setting bit 0 of SFR location 8EH. With the bit set, ALE is active only during a MOVX or MOVC instruction. Otherwise, the pin is weakly pulled high. Setting the ALE-disable bit has no effect if the microcontroller is in external execution mode.

$\overline{PSEN}$

Program Store Enable is the read strobe to external program memory.

When the AT89LS8252 is executing code from external program memory, $\overline{PSEN}$ is activated twice each machine cycle, except that two $\overline{PSEN}$ activations are skipped during each access to external data memory.

$\overline{EA}$/V_{PP}

External Access Enable. $\overline{EA}$ must be strapped to GND in order to enable the device to fetch code from external program memory locations starting at 0000H up to FFFFH. Note, however, that if lock bit 1 is programmed, $\overline{EA}$ will be internally latched on reset.

$\overline{EA}$ should be strapped to V_{CC} for internal program executions. This pin also receives the 12-volt programming enable voltage (V_{PP}) during Flash programming when 12-volt programming is selected.

XTAL1
Input to the inverting oscillator amplifier and input to the internal clock operating circuit.

XTAL2
Output from the inverting oscillator amplifier.

Special Function Registers

A map of the on-chip memory area called the Special Function Register (SFR) space is shown in Table 1.

Note that not all of the addresses are occupied, and unoccupied addresses may not be implemented on the chip. Read accesses to these addresses will in general return random data, and write accesses will have an indeterminate effect.

Table 1. AT89LS8252 SFR Map and Reset Values

0F8H									0FFH
0F0H	B 00000000								0F7H
0E8H									0EFH
0E0H	ACC 00000000								0E7H
0D8H									0DFH
0D0H	PSW 00000000					SPCR 000001XX			0D7H
0C8H	T2CON 00000000	T2MOD XXXXXX00	RCAP2L 00000000	RCAP2H 00000000	TL2 00000000	TH2 00000000			0CFH
0C0H									0C7H
0B8H	IP XX000000								0BFH
0B0H	P3 11111111								0B7H
0A8H	IE 0X000000		SPSR 00XXXXXX						0AFH
0A0H	P2 11111111								0A7H
98H	SCON 00000000	SBUF XXXXXXXX							9FH
90H	P1 11111111						WMCON 00000010		97H
88H	TCON 00000000	TMOD 00000000	TL0 00000000	TL1 00000000	TH0 00000000	TH1 00000000			8FH
80H	P0 11111111	SP 00000111	DP0L 00000000	DP0H 00000000	DP1L 00000000	DP1H 00000000	SPDR XXXXXXXX	PCON 0XXX0000	87H

User software should not write 1s to these unlisted locations, since they may be used in future products to invoke new features. In that case, the reset or inactive values of the new bits will always be 0.

Timer 2 Registers Control and status bits are contained in registers T2CON (shown in Table 2) and T2MOD (shown in Table 9) for Timer 2. The register pair (RCAP2H, RCAP2L) are the Capture/Reload registers for Timer 2 in 16 bit capture mode or 16-bit auto-reload mode.

Watchdog and Memory Control Register The WMCON register contains control bits for the Watchdog Timer (shown in Table 3). The EEMEN and EEMWE bits are used to select the 2K bytes on-chip EEPROM, and to enable byte-write. The DPS bit selects one of two DPTR registers available.

SPI Registers Control and status bits for the Serial Peripheral Interface are contained in registers SPCR (shown in Table 4) and SPSR (shown in Table 5). The SPI data bits are contained in the SPDR register. Writing the SPI data register during serial data transfer sets the Write Collision bit, WCOL, in the SPSR register. The SPDR is double buffered for writing and the values in SPDR are not changed by Reset.

Interrupt Registers The global interrupt enable bit and the individual interrupt enable bits are in the IE register. In addition, the individual interrupt enable bit for the SPI is in the SPCR register. Two priorities can be set for each of the six interrupt sources in the IP register.

Table 2. T2CON—Timer/Counter 2 Control Register

T2CON Address = 0C8HReset Value = 0000 0000B

Bit Addressable

	TF2	EXF2	RCLK	TCLK	EXEN2	TR2	C/$\overline{T2}$	CP/$\overline{RL2}$
Bit	7	6	5	4	3	2	1	0

Symbol	Function
TF2	Timer 2 overflow flag set by a Timer 2 overflow and must be cleared by software. TF2 will not be set when either RCLK = 1 or TCLK = 1.
EXF2	Timer 2 external flag set when either a capture or reload is caused by a negative transition on T2EX and EXEN2 = 1. When Timer 2 interrupt is enabled, EXF2 = 1 will cause the CPU to vector to the Timer 2 interrupt routine. EXF2 must be cleared by software. EXF2 does not cause an interrupt in up/down counter mode (DCEN = 1).
RCLK	Receive clock enable. When set, causes the serial port to use Timer 2 overflow pulses for its receive clock in serial port Modes 1 and 3. RCLK = 0 causes Timer 1 overflows to be used for the receive clock.
TCLK	Transmit clock enable. When set, causes the serial port to use Timer 2 overflow pulses for its transmit clock in serial port Modes 1 and 3. TCLK = 0 causes Timer 1 overflows to be used for the transmit clock.
EXEN2	Timer 2 external enable. When set, allows a capture or reload to occur as a result of a negative transition on T2EX if Timer 2 is not being used to clock the serial port. EXEN2 = 0 causes Timer 2 to ignore events at T2EX.
TR2	Start/Stop control for Timer 2. TR2 = 1 starts the timer.
C/$\overline{T2}$	Timer or counter select for Timer 2. C/$\overline{T2}$ = 0 for timer function. C/$\overline{T2}$ = 1 for external event counter (falling edge triggered).
CP/$\overline{RL2}$	Capture/Reload select. CP/$\overline{RL2}$ = 1 causes captures to occur on negative transitions at T2EX if EXEN2 = 1. CP/$\overline{RL2}$ = 0 causes automatic reloads to occur when Timer 2 overflows or negative transitions occur at T2EX when EXEN2 = 1. When either RCLK or TCLK = 1, this bit is ignored and the timer is forced to auto-reload on Timer 2 overflow.

Dual Data Pointer Registers To facilitate accessing both internal EEPROM and external data memory, two banks of 16 bit Data Pointer Registers are provided: DP0 at SFR address locations 82H-83H and DP1 at 84H-85H. Bit DPS = 0 in SFR WMCON selects DP0 and DPS = 1 selects DP1. The user should always initialize the DPS bit to the appropriate value before accessing the respective Data Pointer Register.

Power Off Flag The Power Off Flag (POF) is located at bit_4 (PCON.4) in the PCON SFR. POF is set to "1" during power up. It can be set and reset under software control and is not affected by RESET.

Table 3. WMCON—Watchdog and Memory Control Register

WMCON Address = 96HReset Value = 0000 0010B

	PS2	PS1	PS0	EEMWE	EEMEN	DPS	WDTRST	WDTEN
Bit	7	6	5	4	3	2	1	0

Symbol	Function
PS2 PS1 PS0	Prescaler Bits for the Watchdog Timer. When all three bits are set to "0", the watchdog timer has a nominal period of 16 ms. When all three bits are set to "1", the nominal period is 2048 ms.
EEMWE	EEPROM Data Memory Write Enable Bit. Set this bit to "1" before initiating byte write to on-chip EEPROM with the MOVX instruction. User software should set this bit to "0" after EEPROM write is completed.
EEMEN	Internal EEPROM Access Enable. When EEMEN = 1, the MOVX instruction with DPTR will access on-chip EEPROM instead of external data memory. When EEMEN = 0, MOVX with DPTR accesses external data memory.
DPS	Data Pointer Register Select. DPS = 0 selects the first bank of Data Pointer Register, DP0, and DPS = 1 selects the second bank, DP1
WDTRST RDY/ $\overline{\text{BSY}}$	Watchdog Timer Reset and EEPROM Ready/$\overline{\text{Busy}}$ Flag. Each time this bit is set to "1" by user software, a pulse is generated to reset the watchdog timer. The WDTRST bit is then automatically reset to "0" in the next instruction cycle. The WDTRST bit is Write-Only. This bit also serves as the RDY/$\overline{\text{BSY}}$ flag in a Read-Only mode during EEPROM write. RDY/$\overline{\text{BSY}}$ = 1 means that the EEPROM is ready to be programmed. While programming operations are being executed, the RDY/$\overline{\text{BSY}}$ bit equals "0" and is automatically reset to "1" when programming is completed.
WDTEN	Watchdog Timer Enable Bit. WDTEN = 1 enables the watchdog timer and WDTEN = 0 disables the watchdog timer.

Table 4. SPCR—SPI Control Register

SPCR Address = D5HReset Value = 0000 01XXB

	SPIE	SPE	DORD	MSTR	CPOL	CPHA	SPR1	SPR0
Bit	7	6	5	4	3	2	1	0

Symbol	Function
SPIE	SPI Interrupt Enable. This bit, in conjunction with the ES bit in the IE register, enables SPI interrupts: SPIE = 1 and ES = 1 enable SPI interrupts. SPIE = 0 disables SPI interrupts.
SPE	SPI Enable. SPI = 1 enables the SPI channel and connects $\overline{SS}$, MOSI, MISO and SCK to pins P1.4, P1.5, P1.6, and P1.7. SPI = 0 disables the SPI channel.
DORD	Data Order. DORD = 1 selects LSB first data transmission. DORD = 0 selects MSB first data transmission.
MSTR	Master/Slave Select. MSTR = 1 selects Master SPI mode. MSTR = 0 selects Slave SPI mode.
CPOL	Clock Polarity. When CPOL = 1, SCK is high when idle. When CPOL = 0, SCK of the master device is low when not transmitting. Please refer to figure on SPI Clock Phase and Polarity Control.
CPHA	Clock Phase. The CPHA bit together with the CPOL bit controls the clock and data relationship between master and slave. Please refer to figure on SPI Clock Phase and Polarity Control.
SPR0 SPR1	SPI Clock Rate Select. These two bits control the SCK rate of the device configured as master. SPR1 and SPR0 have no effect on the slave. The relationship between SCK and the oscillator frequency, $F_{OSC.}$, is as follows: SPR1SPR0SCK = $F_{OSC.}$ divided by 0 0 4 0 1 16 1 0 64 1 1 128

Table 5. SPSR—SPI Status Register

SPSR Address = AAHReset Value = 00XX XXXXB

	SPIF	WCOL	—	—	—	—	—	—
Bit	7	6	5	4	3	2	1	0

Symbol	Function
SPIF	SPI Interrupt Flag. When a serial transfer is complete, the SPIF bit is set and an interrupt is generated if SPIE = 1 and ES = 1. The SPIF bit is cleared by reading the SPI status register with SPIF and WCOL bits set, and then accessing the SPI data register.
WCOL	Write Collision Flag. The WCOL bit is set if the SPI data register is written during a data transfer. During data transfer, the result of reading the SPDR register may be incorrect, and writing to it has no effect. The WCOL bit (and the SPIF bit) are cleared by reading the SPI status register with SPIF and WCOL set, and then accessing the SPI data register.

Table 6. SPDR—SPI Data Register

SPDR Address = 86HReset Value = unchanged

	SPD7	SPD6	SPD5	SPD4	SPD3	SPD2	SPD1	SPD0
Bit	7	6	5	4	3	2	1	0

Data Memory—EEPROM and RAM

The AT89LS8252 implements 2K bytes of on-chip EEPROM for data storage and 256 bytes of RAM. The upper 128 bytes of RAM occupy a parallel space to the Special Function Registers. That means the upper 128 bytes have the same addresses as the SFR space but are physically separate from SFR space.

When an instruction accesses an internal location above address 7FH, the address mode used in the instruction specifies whether the CPU accesses the upper 128 bytes of RAM or the SFR space. Instructions that use direct addressing access SFR space.

For example, the following direct addressing instruction accesses the SFR at location 0A0H (which is P2).

```
MOV 0A0H, #data
```

Instructions that use indirect addressing access the upper 128 bytes of RAM. For example, the following indirect addressing instruction, where R0 contains 0A0H, accesses the data byte at address 0A0H, rather than P2 (whose address is 0A0H).

```
MOV @R0, #data
```

Note that stack operations are examples of indirect addressing, so the upper 128 bytes of data RAM are available as stack space.

The on-chip EEPROM data memory is selected by setting the EEMEN bit in the WMCON register at SFR address location 96H. The EEPROM address range is from 000H to 7FFH. The MOVX instructions are used to access the EEPROM. To access off-chip data memory with the MOVX instructions, the EEMEN bit needs to be set to “0”.

The EEMWE bit in the WMCON register needs to be set to “1” before any byte location in the EEPROM can be written. User software should reset EEMWE bit to “0” if no further EEPROM write is required. EEPROM write cycles in the serial programming mode are self-timed and typically take 2.5 ms. The progress of EEPROM write can be monitored by reading the RDY/$\overline{BSY}$ bit (read-only) in SFR WMCON. RDY/$\overline{BSY}$ = 0 means programming is still in progress and RDY/$\overline{BSY}$ = 1 means EEPROM write cycle is completed and another write cycle can be initiated.

In addition, during EEPROM programming, an attempted read from the EEPROM will fetch the byte being written with the MSB complemented. Once the write cycle is completed, true data are valid at all bit locations.

Programmable Watchdog Timer

The programmable Watchdog Timer (WDT) operates from an independent oscillator. The prescaler bits, PS0, PS1 and PS2 in SFR WMCON are used to set the period of the Watchdog Timer from 16 ms to 2048 ms. The available timer periods are shown in the following table and the actual timer periods (at V_{CC} = 5V) are within ±30% of the nominal.

The WDT is disabled by Power-on Reset and during Power Down. It is enabled by setting the WDTEN bit in SFR WMCON (address = 96H). The WDT is reset by setting the WDTRST bit in WMCON. When the WDT times out without being reset or disabled, an internal RST pulse is generated to reset the CPU.

Table 7. Watchdog Timer Period Selection

WDT Prescaler Bits			Period (nominal)
PS2	PS1	PS0	
0	0	0	16 ms
0	0	1	32 ms
0	1	0	64 ms
0	1	1	128 ms
1	0	0	256 ms
1	0	1	512 ms
1	1	0	1024 ms
1	1	1	2048 ms

Timer 0 and 1

Timer 0 and Timer 1 in the AT89LS8252 operate the same way as Timer 0 and Timer 1 in the AT89C51, AT89C52 and AT89C55. For further information, see the October 1995 Microcontroller Data Book, page 2-45, section titled, “Timer/Counters.”

Timer 2

Timer 2 is a 16 bit Timer/Counter that can operate as either a timer or an event counter. The type of operation is selected by bit C/$\overline{T2}$ in the SFR T2CON (shown in Table 2). Timer 2 has three operating modes: capture, auto-reload (up or down counting), and baud rate generator. The modes are selected by bits in T2CON, as shown in Table 8.

Timer 2 consists of two 8-bit registers, TH2 and TL2. In the Timer function, the TL2 register is incremented every machine cycle. Since a machine cycle consists of 12 oscillator periods, the count rate is 1/12 of the oscillator frequency.

In the Counter function, the register is incremented in response to a 1-to-0 transition at its corresponding external input pin, T2. In this function, the external input is sampled during S5P2 of every machine cycle. When the samples show a high in one cycle and a low in the next cycle, the count is incremented. The new count value appears in the register during S3P1 of the cycle following the one in which the transition was detected. Since two machine cycles (24 oscillator periods) are required to recognize a 1-to-0 transition, the maximum count rate is 1/24 of the oscillator frequency. To ensure that a given level is sampled at least once before it changes, the level should be held for at least one full machine cycle.

Table 8. Timer 2 Operating Modes

RCLK + TCLK	CP/$\overline{RL2}$	TR2	MODE
0	0	1	16-bit Auto-Reload
0	1	1	16-bit Capture
1	X	1	Baud Rate Generator
X	X	0	(Off)

Capture Mode

In the capture mode, two options are selected by bit EXEN2 in T2CON. If EXEN2 = 0, Timer 2 is a 16 bit timer or counter which upon overflow sets bit TF2 in T2CON. This bit can then be used to generate an interrupt. If EXEN2 = 1, Timer 2 performs the same operation, but a 1-to-0 transition at external input T2EX also causes the current value in TH2 and TL2 to be captured into RCAP2H and RCAP2L, respectively. In addition, the transition at T2EX causes bit EXF2 in T2CON to be set. The EXF2 bit, like TF2, can generate an interrupt. The capture mode is illustrated in Figure 1.

Auto-Reload (Up or Down Counter)

Timer 2 can be programmed to count up or down when configured in its 16 bit auto-reload mode. This feature is invoked by the DCEN (Down Counter Enable) bit located in the SFR T2MOD (see Table 9). Upon reset, the DCEN bit is set to 0 so that timer 2 will default to count up. When DCEN is set, Timer 2 can count up or down, depending on the value of the T2EX pin.

Figure 1. Timer 2 in Capture Mode

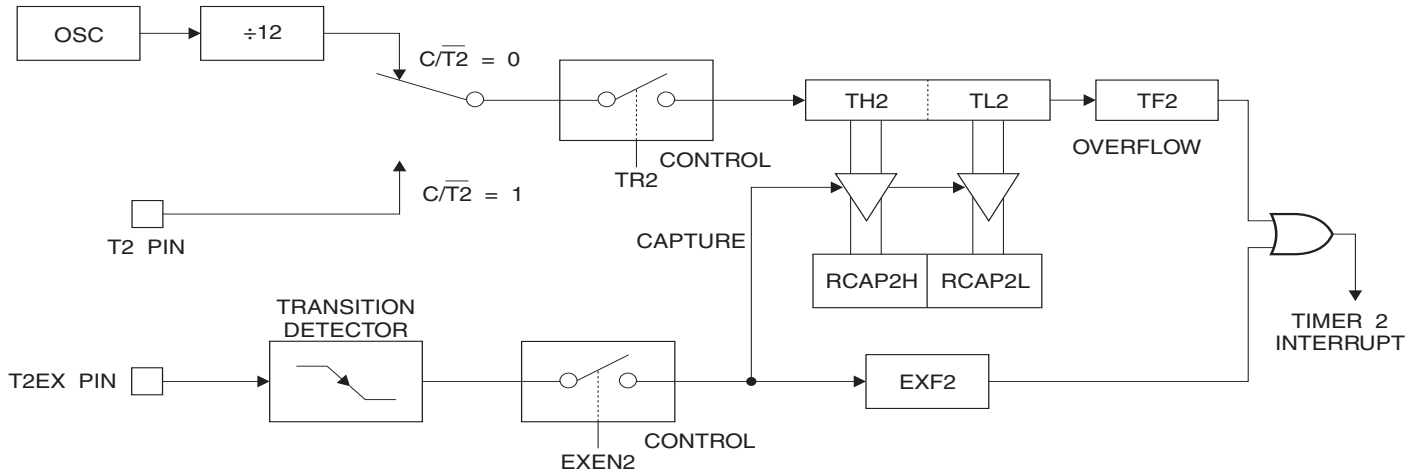

Figure 2 shows Timer 2 automatically counting up when DCEN = 0. In this mode, two options are selected by bit EXEN2 in T2CON. If EXEN2 = 0, Timer 2 counts up to 0FFFFH and then sets the TF2 bit upon overflow. The overflow also causes the timer registers to be reloaded with the 16 bit value in RCAP2H and RCAP2L. The values in RCAP2H and RCAP2L are preset by software. If EXEN2 = 1, a 16 bit reload can be triggered either by an overflow or by a 1-to-0 transition at external input T2EX. This transition also sets the EXF2 bit. Both the TF2 and EXF2 bits can generate an interrupt if enabled.

Setting the DCEN bit enables Timer 2 to count up or down, as shown in Figure 3. In this mode, the T2EX pin controls the direction of the count. A logic 1 at T2EX makes Timer 2 count up. The timer will overflow at 0FFFFH and set the TF2 bit. This overflow also causes the 16 bit value in RCAP2H and RCAP2L to be reloaded into the timer registers, TH2 and TL2, respectively.

A logic 0 at T2EX makes Timer 2 count down. The timer underflows when TH2 and TL2 equal the values stored in RCAP2H and RCAP2L. The underflow sets the TF2 bit and causes 0FFFFH to be reloaded into the timer registers.

The EXF2 bit toggles whenever Timer 2 overflows or underflows and can be used as a 17th bit of resolution. In this operating mode, EXF2 does not flag an interrupt.

Figure 2. Timer 2 in Auto Reload Mode (DCEN = 0)

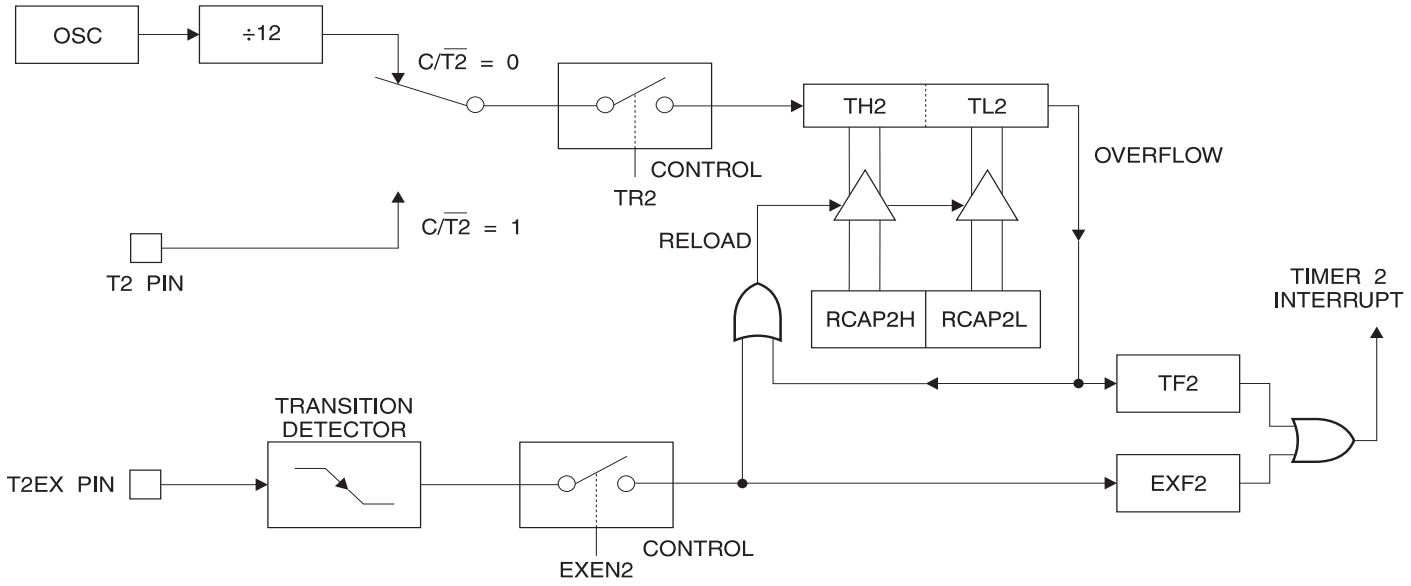

Table 9. T2MOD—Timer 2 Mode Control Register

T2MOD Address = 0C9HReset Value = XXXX XX00B

Not Bit Addressable

	—	—	—	—	—	—	T2OE	DCEN
Bit	7	6	5	4	3	2	1	0

Symbol	Function
—	Not implemented, reserved for future use.
T2OE	Timer 2 Output Enable bit.
DCEN	When set, this bit allows Timer 2 to be configured as an up/down counter.

Figure 3. Timer 2 Auto Reload Mode (DCEN = 1)

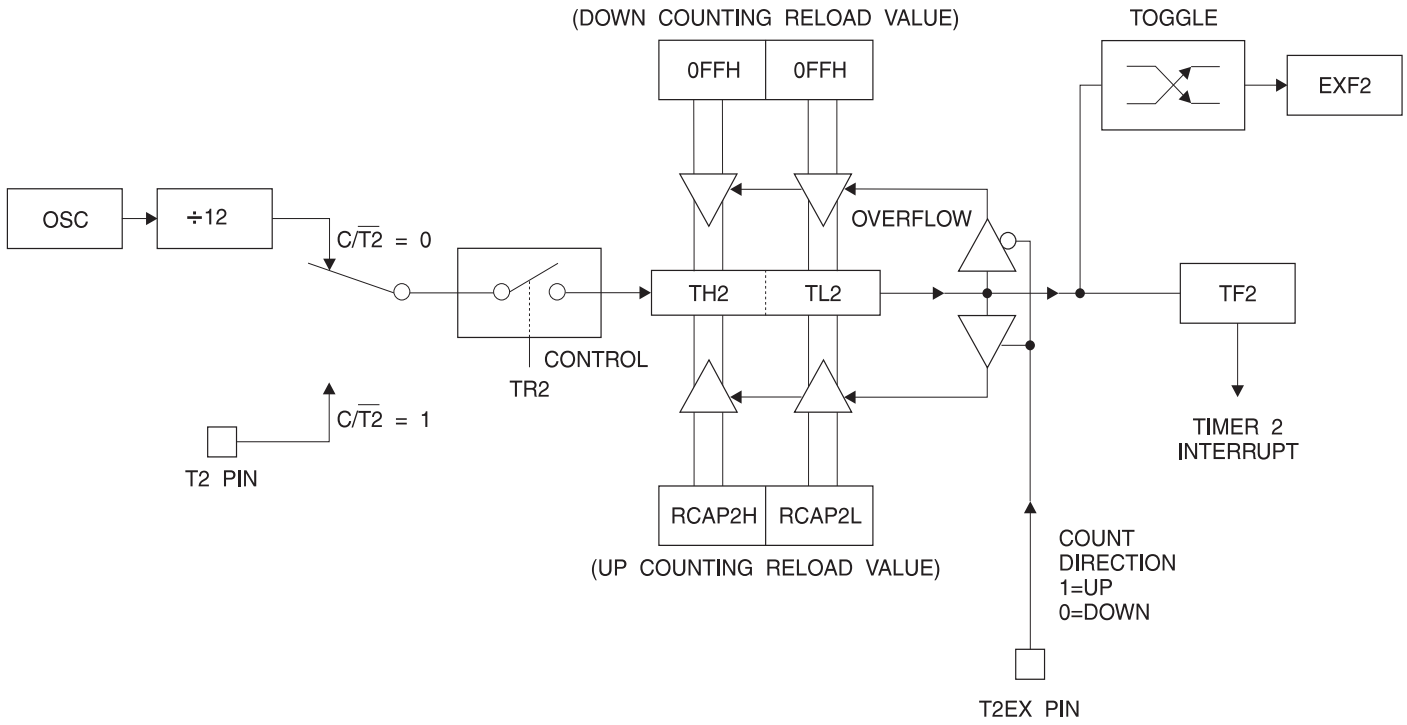

Figure 4. Timer 2 in Baud Rate Generator Mode

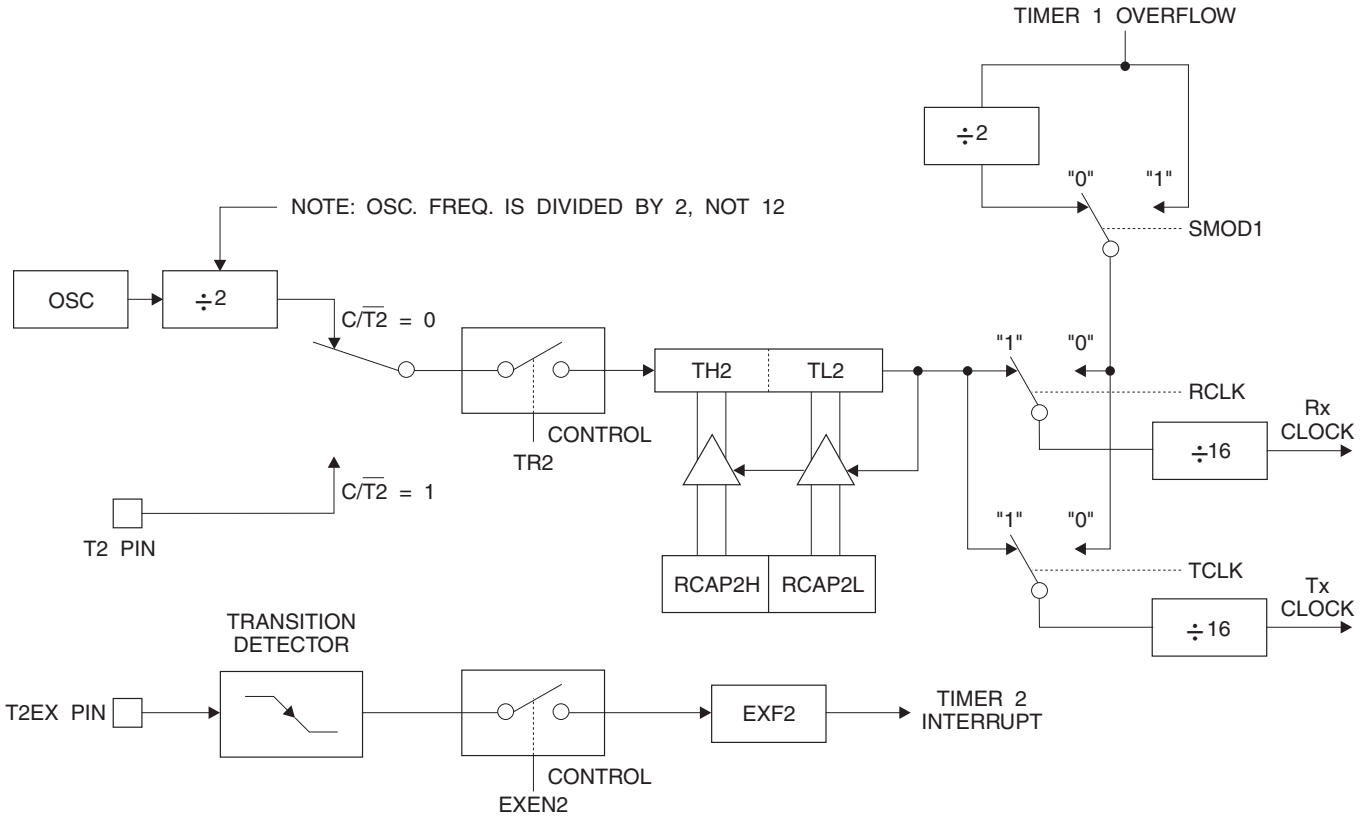

Baud Rate Generator

Timer 2 is selected as the baud rate generator by setting TCLK and/or RCLK in T2CON (Table 2). Note that the baud rates for transmit and receive can be different if Timer 2 is used for the receiver or transmitter and Timer 1 is used for the other function. Setting RCLK and/or TCLK puts Timer 2 into its baud rate generator mode, as shown in Figure 4.

The baud rate generator mode is similar to the auto-reload mode, in that a rollover in TH2 causes the Timer 2 registers to be reloaded with the 16 bit value in registers RCAP2H and RCAP2L, which are preset by software.

The baud rates in Modes 1 and 3 are determined by Timer 2's overflow rate according to the following equation.

$$\text{Modes 1 and 3 Baud Rates} = \frac{\text{Timer 2 Overflow Rate}}{16}$$

The Timer can be configured for either timer or counter operation. In most applications, it is configured for timer operation (CP/$\overline{T2}$ = 0). The timer operation is different for Timer 2 when it is used as a baud rate generator. Normally, as a timer, it increments every machine cycle (at 1/12 the oscillator frequency). As a baud rate generator, however, it increments every state time (at 1/2 the oscillator frequency). The baud rate formula is given below.

$$\frac{\text{Modes 1 and 3}}{\text{Baud Rate}} = \frac{\text{Oscillator Frequency}}{32 \times [65536 - (\text{RCAP2H,RCAP2L})]}$$

where (RCAP2H, RCAP2L) is the content of RCAP2H and RCAP2L taken as a 16 bit unsigned integer.

Timer 2 as a baud rate generator is shown in Figure 4. This figure is valid only if RCLK or TCLK = 1 in T2CON. Note that a rollover in TH2 does not set TF2 and will not generate an interrupt. Note too, that if EXEN2 is set, a 1-to-0 transition in T2EX will set EXF2 but will not cause a reload from (RCAP2H, RCAP2L) to (TH2, TL2). Thus when Timer 2 is in use as a baud rate generator, T2EX can be used as an extra external interrupt.

Note that when Timer 2 is running (TR2 = 1) as a timer in the baud rate generator mode, TH2 or TL2 should not be read from or written to. Under these conditions, the Timer is incremented every state time, and the results of a read or write may not be accurate. The RCAP2 registers may be read but should not be written to, because a write might overlap a reload and cause write and/or reload errors. The timer should be turned off (clear TR2) before accessing the Timer 2 or RCAP2 registers.

Figure 5. Timer 2 in Clock-Out Mode

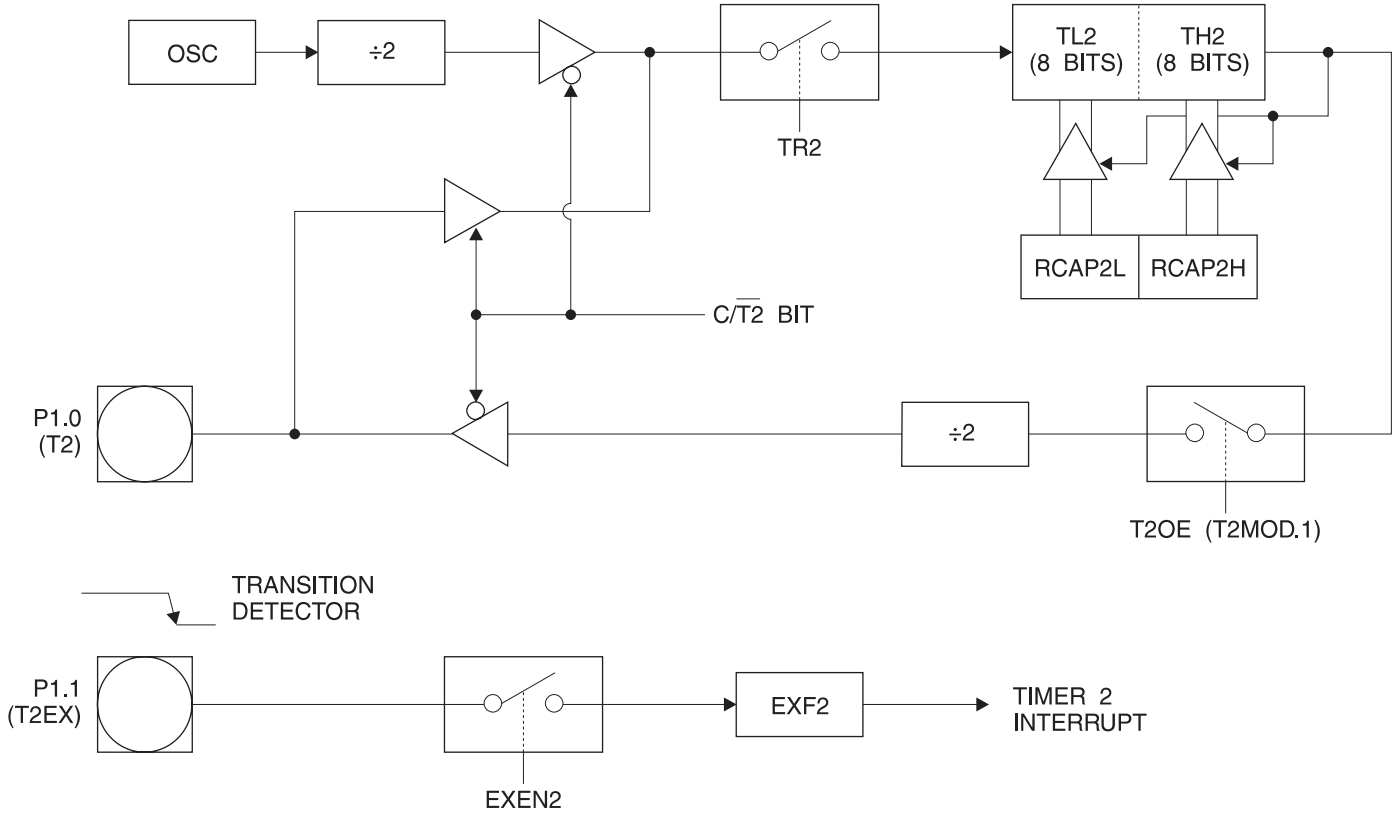

Programmable Clock Out

A 50% duty cycle clock can be programmed to come out on P1.0, as shown in Figure 5. This pin, besides being a regular I/0 pin, has two alternate functions. It can be programmed to input the external clock for Timer/Counter 2 or to output a 50% duty cycle clock ranging from 61 Hz to 3 MHz at a 12 MHz operating frequency.

To configure the Timer/Counter 2 as a clock generator, bit C/$\overline{T2}$ (T2CON.1) must be cleared and bit T2OE (T2MOD.1) must be set. Bit TR2 (T2CON.2) starts and stops the timer.

The clock-out frequency depends on the oscillator frequency and the reload value of Timer 2 capture registers (RCAP2H, RCAP2L), as shown in the following equation.

$$\text{Clock-Out Frequency} = \frac{\text{Oscillator Frequency}}{4 \times [65536 - (\text{RCAP2H,RCAP2L})]}$$

In the clock-out mode, Timer 2 rollovers will not generate an interrupt. This behavior is similar to when Timer 2 is used as a baud-rate generator. It is possible to use Timer 2 as a baud-rate generator and a clock generator simultaneously. Note, however, that the baud-rate and clock-out frequencies cannot be determined independently from one another since they both use RCAP2H and RCAP2L.

UART

The UART in the AT89LS8252 operates the same way as the UART in the AT89C51, AT89C52 and AT89C55. For further information, see the October 1995 Atmel Microcontroller Data Book, page 2-49, section titled, “Serial Interface.”

Serial Peripheral Interface

The serial peripheral interface (SPI) allows high-speed synchronous data transfer between the AT89LS8252 and peripheral devices or between several AT89LS8252 devices. The AT89LS8252 SPI features include the following:

- Full-Duplex, 3-Wire Synchronous Data Transfer
- Master or Slave Operation
- 1.5-MHz Bit Frequency (max.)
- LSB First or MSB First Data Transfer
- Four Programmable Bit Rates
- End of Transmission Interrupt Flag
- Write Collision Flag Protection
- Wakeup from Idle Mode (Slave Mode Only)

Figure 6. SPI Block Diagram

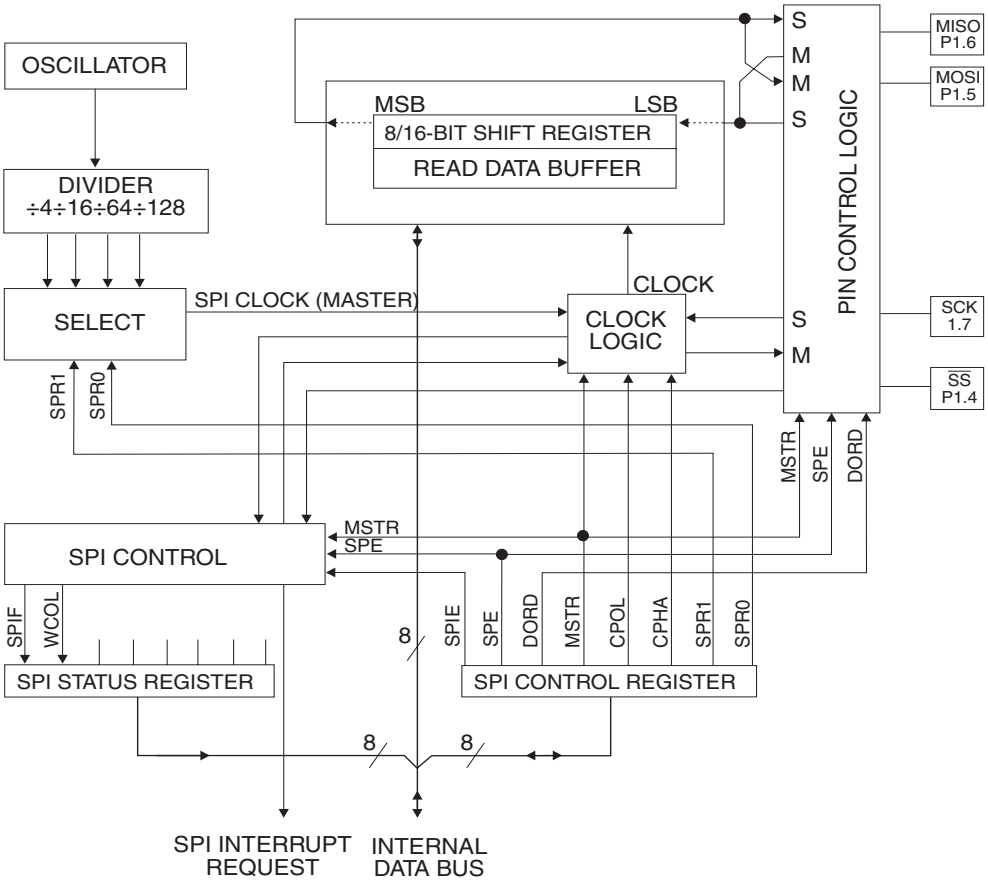

The interconnection between master and slave CPUs with SPI is shown in the following figure. The SCK pin is the clock output in the master mode but is the clock input in the slave mode. Writing to the SPI data register of the master CPU starts the SPI clock generator, and the data written shifts out of the MOSI pin and into the MOSI pin of the slave CPU. After shifting one byte, the SPI clock generator stops, setting the end of transmission flag (SPIF). If both the SPI interrupt enable bit (SPIE) and the serial port interrupt enable bit (ES) are set, an interrupt is requested.

The Slave Select input, $\overline{SS}$/P1.4, is set low to select an individual SPI device as a slave. When $\overline{SS}$/P1.4 is set high, the SPI port is deactivated and the MOSI/P1.5 pin can be used as an input.

There are four combinations of SCK phase and polarity with respect to serial data, which are determined by control bits CPHA and CPOL. The SPI data transfer formats are shown in Figures 8 and 9.

Figure 7. SPI Master-Slave Interconnection

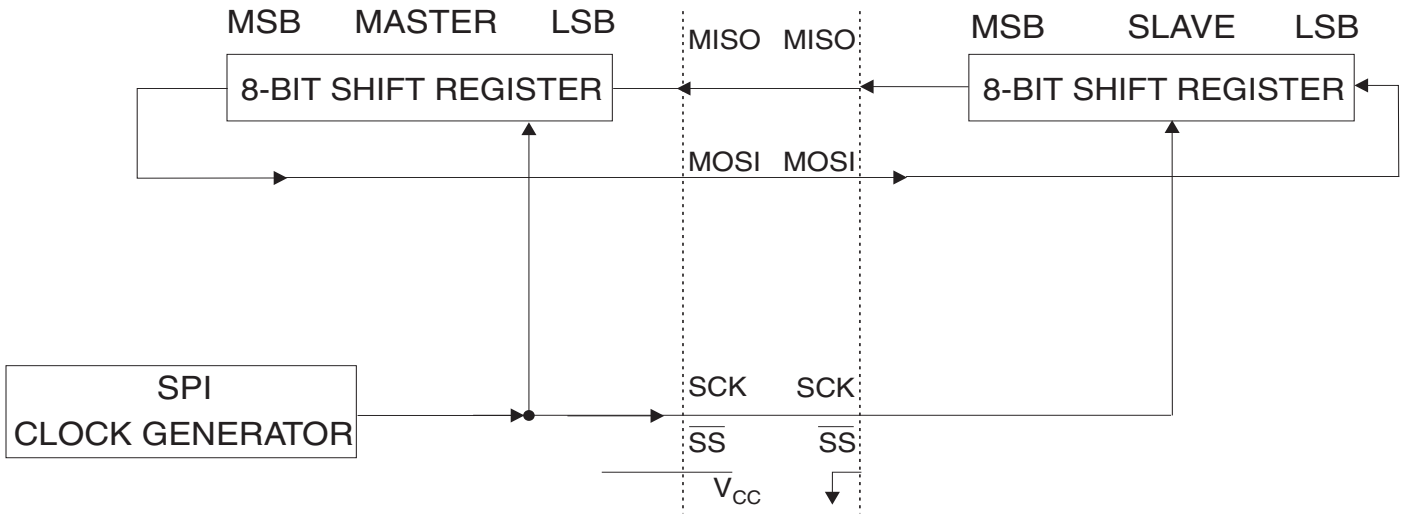

Figure 8. SPI transfer Format with CPHA = 0

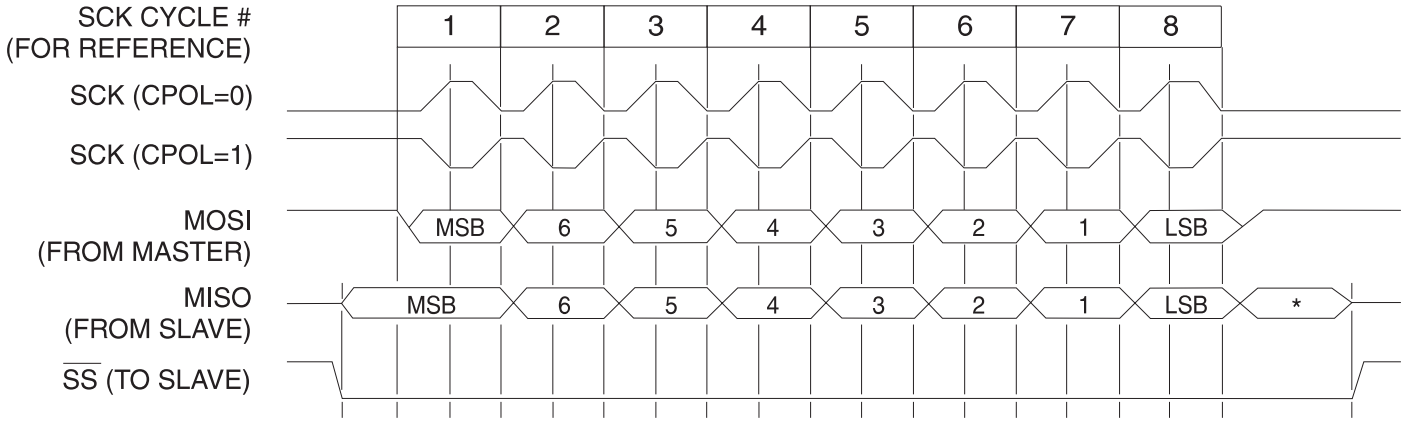

*Not defined but normally MSB of character just received

Figure 9. SPI Transfer Format with CPHA = 1

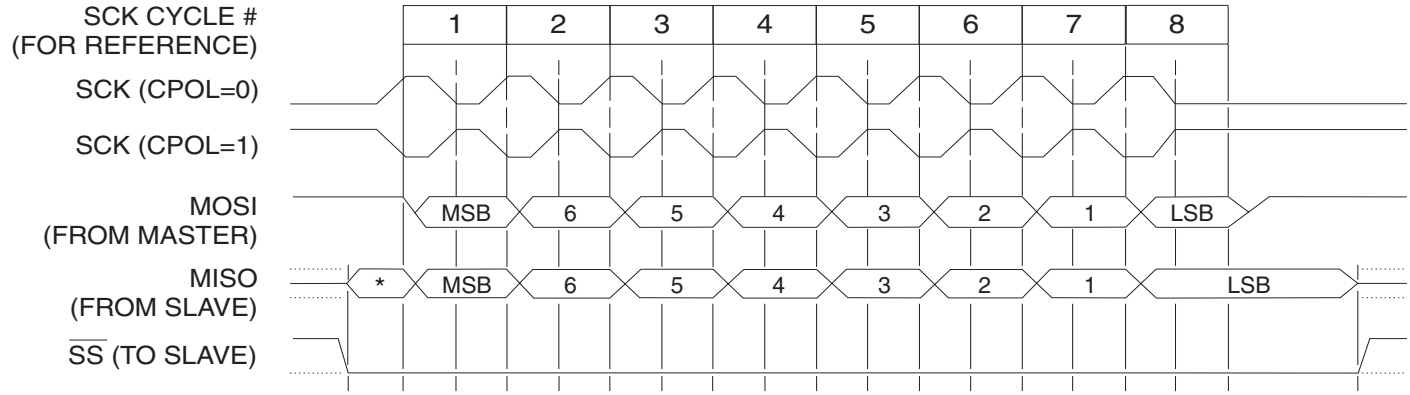

*Not defined but normally LSB of previously transmitted character

Interrupts

The AT89LS8252 has a total of six interrupt vectors: two external interrupts ($\overline{INT0}$ and $\overline{INT1}$), three timer interrupts (Timers 0, 1, and 2), and the serial port interrupt. These interrupts are all shown in Figure 10.

Each of these interrupt sources can be individually enabled or disabled by setting or clearing a bit in Special Function Register IE. IE also contains a global disable bit, EA, which disables all interrupts at once.

Note that Table 10 shows that bit position IE.6 is unimplemented. In the AT89C51 and AT89LV51, bit position IE.5 is also unimplemented. User software should not write 1s to these bit positions, since they may be used in future AT89 products.

Timer 2 interrupt is generated by the logical OR of bits TF2 and EXF2 in register T2CON. Neither of these flags is cleared by hardware when the service routine is vectored to. In fact, the service routine may have to determine whether it was TF2 or EXF2 that generated the interrupt, and that bit will have to be cleared in software.

The Timer 0 and Timer 1 flags, TF0 and TF1, are set at S5P2 of the cycle in which the timers overflow. The values are then polled by the circuitry in the next cycle. However, the Timer 2 flag, TF2, is set at S2P2 and is polled in the same cycle in which the timer overflows.

Table 10. Interrupt Enable (IE) Register

(MSB)(LSB)

EA	—	ET2	ES	ET1	EX1	ET0	EX0

Enable Bit = 1 enables the interrupt.

Enable Bit = 0 disables the interrupt.

Symbol	Position	Function
EA	IE.7	Disables all interrupts. If EA = 0, no interrupt is acknowledged. If EA = 1, each interrupt source is individually enabled or disabled by setting or clearing its enable bit.
—	IE.6	Reserved.
ET2	IE.5	Timer 2 interrupt enable bit.
ES	IE.4	SPI and UART interrupt enable bit.
ET1	IE.3	Timer 1 interrupt enable bit.
EX1	IE.2	External interrupt 1 enable bit.
ET0	IE.1	Timer 0 interrupt enable bit.
EX0	IE.0	External interrupt 0 enable bit.
User software should never write 1s to unimplemented bits, because they may be used in future AT89 products.		

Figure 10. Interrupt Sources

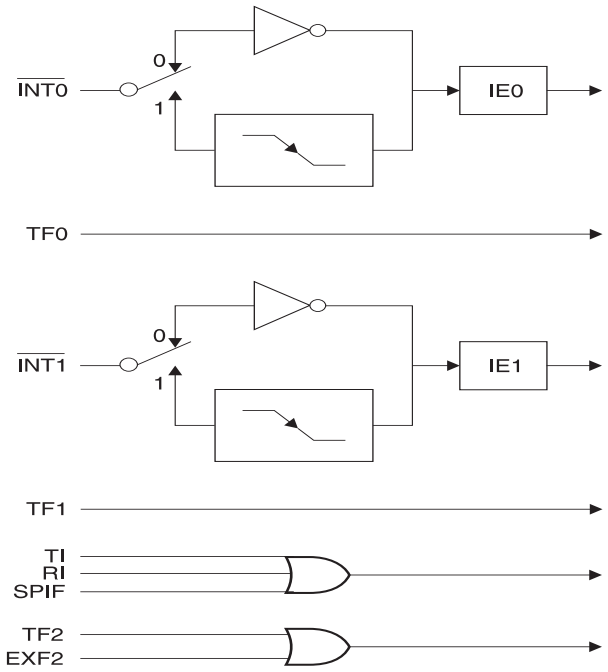

Figure 11. Oscillator Connections

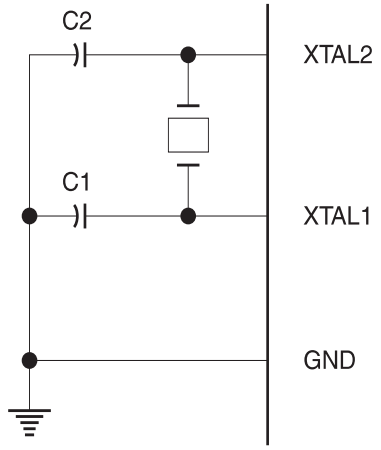

Figure 12. External Clock Drive Configuration

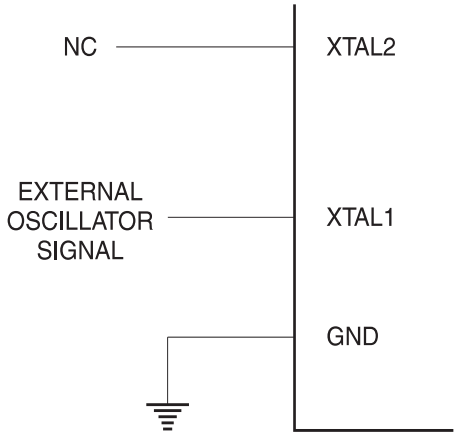

Note: C1, C2 = 30 pF ± 10 pF for Crystals
= 40 pF ± 10 pF for Ceramic Resonators

Oscillator Characteristics

XTAL1 and XTAL2 are the input and output, respectively, of an inverting amplifier that can be configured for use as an on-chip oscillator, as shown in Figure 11. Either a quartz crystal or ceramic resonator may be used. To drive the device from an external clock source, XTAL2 should be left unconnected while XTAL1 is driven, as shown in Figure 12. There are no requirements on the duty cycle of the external clock signal, since the input to the internal clocking circuitry is through a divide-by-two flip-flop, but minimum and maximum voltage high and low time specifications must be observed.

Idle Mode

In idle mode, the CPU puts itself to sleep while all the on-chip peripherals remain active. The mode is invoked by software. The content of the on-chip RAM and all the special functions registers remain unchanged during this mode. The idle mode can be terminated by any enabled interrupt or by a hardware reset.

Note that when idle mode is terminated by a hardware reset, the device normally resumes program execution from where it left off, up to two machine cycles before the internal reset algorithm takes control. On-chip hardware inhibits access to internal RAM in this event, but access to the port pins is not inhibited. To eliminate the possibility of an unexpected write to a port pin when idle mode is terminated by a reset, the instruction following the one that invokes idle mode should not write to a port pin or to external memory.

Power Down Mode

In the power down mode, the oscillator is stopped and the instruction that invokes power down is the last instruction executed. The on-chip RAM and Special Function Registers retain their values until the power down mode is terminated. Exit from power down can be initiated either by a hardware reset or by an enabled external interrupt. Reset redefines the SFRs but does not change the on-chip RAM. The reset should not be activated before V_{CC} is restored to its normal operating level and must be held active long enough to allow the oscillator to restart and stabilize.

To exit power down via an interrupt, the external interrupt must be enabled as level sensitive before entering power down. The interrupt service routine starts at 16 ms (nominal) after the enabled interrupt pin is activated.

Status of External Pins During Idle and Power Down Modes

Mode	Program Memory	ALE	$\overline{PSEN}$	PORT0	PORT1	PORT2	PORT3
Idle	Internal	1	1	Data	Data	Data	Data
Idle	External	1	1	Float	Data	Address	Data
Power Down	Internal	0	0	Data	Data	Data	Data
Power Down	External	0	0	Float	Data	Data	Data

Program Memory Lock Bits

The AT89LS8252 has three lock bits that can be left unprogrammed (U) or can be programmed (P) to obtain the additional features listed in the following table.

When lock bit 1 is programmed, the logic level at the $\overline{EA}$ pin is sampled and latched during reset. If the device is powered up without a reset, the latch initializes to a random value and holds that value until reset is activated. The latched value of $\overline{EA}$ must agree with the current logic level at that pin in order for the device to function properly.

Once programmed, the lock bits can only be unprogrammed with the Chip Erase operations in either the parallel or serial modes.

Lock Bit Protection Modes (1) (2)

Program Lock Bits				
	LB1	LB2	LB3	Protection Type
1	U	U	U	No internal memory lock feature.
2	P	U	U	MOVC instructions executed from external program memory are disabled from fetching code bytes from internal memory. $\overline{EA}$ is sampled and latched on reset and further programming of the Flash memory (parallel or serial mode) is disabled.
3	P	P	U	Same as Mode 2, but parallel or serial verify are also disabled.
4	P	P	P	Same as Mode 3, but external execution is also disabled.

Notes: 1. U = Unprogrammed
2. P = Programmed

Programming the Flash and EEPROM

Atmel's AT89LS8252 Flash Microcontroller offers 8K bytes of in-system reprogrammable Flash Code memory and 2K bytes of EEPROM Data memory.

The AT89LS8252 is normally shipped with the on-chip Flash Code and EEPROM Data memory arrays in the erased state (i.e. contents = FFH) and ready to be programmed. This device supports a High-Voltage (12V) Parallel programming mode and a Low-Voltage (2.7V to 6V) Serial programming mode. The serial programming mode provides a convenient way to download the AT89LS8252 inside the user's system. The parallel programming mode is compatible with conventional third party Flash or EPROM programmers.

The Code and Data memory arrays are mapped via separate address spaces in the serial programming mode. In the parallel programming mode, the two arrays occupy one contiguous address space: 0000H to 1FFFH for the Code array and 2000H to 27FFH for the Data array.

The Code and Data memory arrays on the AT89LS8252 are programmed byte-by-byte in either programming mode. An auto-erase cycle is provided with the self-timed programming operation in the serial programming mode. There is no need to perform the Chip Erase operation to reprogram any memory location in the serial programming mode unless any of the lock bits have been programmed.

In the parallel programming mode, there is no auto-erase cycle. To reprogram any non-blank byte, the user needs to use the Chip Erase operation first to erase both arrays.

Parallel Programming Algorithm

To program and verify the AT89LS8252 in the parallel programming mode, the following sequence is recommended:

1. Power-up sequence:

   Apply power between V_{CC} and GND pins.

   Set RST pin to "H".

   Apply a 3 MHz to 12 MHz clock to XTAL1 pin and wait for at least 10 milliseconds.
2. Set $\overline{PSEN}$ pin to "L"

   ALE pin to "H"

   $\overline{EA}$ pin to "H" and all other pins to "H".
3. Apply the appropriate combination of "H" or "L" logic levels to pins P2.6, P2.7, P3.6, P3.7 to select one of the programming operations shown in the Flash Programming Modes table.
4. Apply the desired byte address to pins P1.0 to P1.7 and P2.0 to P2.5.

   Apply data to pins P0.0 to P0.7 for Write Code operation.
5. Raise $\overline{EA}/V_{PP}$ to 12V to enable Flash programming, erase or verification.
6. Pulse ALE/$\overline{PROG}$ once to program a byte in the Code memory array, the Data memory array or the lock bits. The byte-write cycle is self-timed and typically takes 1.5 ms.

7. To verify the byte just programmed, bring pin P2.7 to “L” and read the programmed data at pins P0.0 to P0.7.
8. Repeat steps 3 through 7 changing the address and data for the entire 2K or 8K bytes array or until the end of the object file is reached.
9. Power-off sequence:

   Set XTAL1 to “L”.

   Set RST and $\overline{EA}$ pins to “L”.

   Turn V_{CC} power off.

In the parallel programming mode, there is no auto-erase cycle and to reprogram any non-blank byte, the user needs to use the Chip Erase operation first to erase both arrays.

$\overline{DATA}$ Polling

The AT89LS8252 features $\overline{DATA}$ Polling to indicate the end of a write cycle. During a write cycle in the parallel or serial programming mode, an attempted read of the last byte written will result in the complement of the written datum on P0.7 (parallel mode), and on the MSB of the serial output byte on MISO (serial mode). Once the write cycle has been completed, true data are valid on all outputs, and the next cycle may begin. $\overline{DATA}$ Polling may begin any time after a write cycle has been initiated.

Ready/$\overline{Busy}$

The progress of byte programming in the parallel programming mode can also be monitored by the RDY/$\overline{BSY}$ output signal. Pin P3.4 is pulled Low after ALE goes High during programming to indicate $\overline{BUSY}$. P3.4 is pulled High again when programming is done to indicate READY.

Program Verify

If lock bits LB1 and LB2 have not been programmed, the programmed Code or Data byte can be read back via the address and data lines for verification. The state of the lock bits can also be verified directly in the parallel programming mode. In the serial programming mode, the state of the lock bits can only be verified indirectly by observing that the lock bit features are enabled.

Chip Erase

Both Flash and EEPROM arrays are erased electrically at the same time. In the parallel programming mode, chip erase is initiated by using the proper combination of control signals and by holding ALE/$\overline{PROG}$ low for 10 ms. The Code and Data arrays are written with all “1”s in the Chip Erase operation.

In the serial programming mode, a chip erase operation is initiated by issuing the Chip Erase instruction. In this mode, chip erase is self-timed and takes about 16 ms.

During chip erase, a serial read from any address location will return 00H at the data outputs.

Serial Programming Fuse

A programmable fuse is available to disable Serial Programming if the user needs maximum system security. The Serial Programming Fuse can only be programmed or erased in the Parallel Programming Mode.

The AT89LS8252 is shipped with the Serial Programming Mode enabled.

Reading the Signature Bytes: The signature bytes are read by the same procedure as a normal verification of locations 030H and 031H, except that P3.6 and P3.7 must be pulled to a logic low. The values returned are as follows:

(030H) = 1EH indicates manufactured by Atmel
(031H) = 82H indicates 89LS8252

Programming Interface

Every code byte in the Flash and EEPROM arrays can be written, and the entire array can be erased, by using the appropriate combination of control signals. The write operation cycle is self-timed and once initiated, will automatically time itself to completion.

All major programming vendors offer worldwide support for the Atmel microcontroller series. Please contact your local programming vendor for the appropriate software revision.

Serial Downloading

Both the Code and Data memory arrays can be programmed using the serial SPI bus while RST is pulled to V_{CC}. The serial interface consists of pins SCK, MOSI (input) and MISO (output). After RST is set high, the Programming Enable instruction needs to be executed first before program/erase operations can be executed.

An auto-erase cycle is built into the self-timed programming operation (in the serial mode ONLY) and there is no need to first execute the Chip Erase instruction unless any of the lock bits have been programmed. The Chip Erase operation turns the content of every memory location in both the Code and Data arrays into FFH.

The Code and Data memory arrays have separate address spaces:

0000H to 1FFFH for Code memory and 000H to 7FFH for Data memory.

Either an external system clock is supplied at pin XTAL1 or a crystal needs to be connected across pins XTAL1 and XTAL2. The maximum serial clock (SCK) frequency should be less than 1/40 of the crystal frequency. With a 12 MHz oscillator clock, the maximum SCK frequency is 300 kHz.

Serial Programming Algorithm

To program and verify the AT89LS8252 in the serial programming mode, the following sequence is recommended:

1. Power-up sequence:

   Apply power between V_{CC} and GND pins.

   Set RST pin to “H”.

   If a crystal is not connected across pins XTAL1 and XTAL2, apply a 3 MHz to 12 MHz clock to XTAL1 pin and wait for at least 10 milliseconds.
2. Enable serial programming by sending the Programming Enable serial instruction to pin MOSI/P1.5. The frequency of the shift clock supplied at pin SCK/P1.7 needs to be less than the CPU clock at XTAL1 divided by 40.
3. The Code or Data array is programmed one byte at a time by supplying the address and data together with the appropriate Write instruction. The selected memory location is first automatically erased before new data is written. The write cycle is self-timed and typically takes less than 2.5 ms at 5V and less than 10 ms at 2.7V.
4. Any memory location can be verified by using the Read instruction which returns the content at the selected address at serial output MISO/P1.6.
5. At the end of a programming session, RST can be set low to commence normal operation.

Power-off sequence (if needed):

Set XTAL1 to “L” (if a crystal is not used).

Set RST to “L”.

Turn V_{CC} power off.

Serial Programming Instruction

The Instruction Set for Serial Programming follows a 3-byte protocol and is shown in the following table:

Instruction Set

Instruction	Input Format			Operation
	Byte 1	Byte 2	Byte 3	
Programming Enable	1010 1100	0101 0011	xxxx xxxx	Enable serial programming interface after RST goes high.
Chip Erase	1010 1100	xxxx x100	xxxx xxxx	Chip erase both 8K & 2K memory arrays.
Read Code Memory	aaaa a001	low addr	xxxx xxxx	Read data from Code memory array at the selected address. The 5 MSBs of the first byte are the high order address bits. The low order address bits are in the second byte. Data are available at pin MISO during the third byte.
Write Code Memory	aaaa a010	low addr	data in	Write data to Code memory location at selected address. The address bits are the 5 MSBs of the first byte together with the second byte.
Read Data Memory	00aa a101	low addr	xxxx xxxx	Read data from Data memory array at selected address. Data are available at pin MISO during the third byte.
Write Data Memory	00aa a110	low addr	data in	Write data to Data memory location at selected address.
Write Lock Bits	1010 1100	LB1 LB2 LB3 x x111	xxxx xxxx	Write lock bits. Set LB1, LB2 or LB3 = “0” to program lock bits.

Notes: 1. $\overline{\text{DATA}}$ polling is used to indicate the end of a write cycle which typically takes less than 10 ms at 2.7V.

2. “aaaaa” = high order address.

3. “x” = don’t care.

Flash and EEPROM Parallel Programming Modes

Mode	RST	$\overline{PSEN}$	ALE/$\overline{PROG}$	$\overline{EA}$/V_{PP}	P2.6	P2.7	P3.6	P3.7	Data I/O P0.7:0	Address P2.5:0 P1.7:0
Serial Prog. Modes	H	h (1)	h (1)	x						
Chip Erase	H	L	(2)	12V	H	L	L	L	X	X
Write (10K bytes) Memory	H	L		12V	L	H	H	H	DIN	ADDR
Read (10K bytes) Memory	H	L	H	12V	L	L	H	H	DOUT	ADDR
Write Lock Bits:	H	L		12V	H	L	H	L	DIN	X
Bit - 1									P0.7 = 0	X
Bit - 2									P0.6 = 0	X
Bit - 3									P0.5 = 0	X
Read Lock Bits:	H	L	H	12V	H	H	L	L	DOUT	X
Bit - 1									@P0.2	X
Bit - 2									@P0.1	X
Bit - 3									@P0.0	X
Read Atmel Code	H	L	H	12V	L	L	L	L	DOUT	30H
Read Device Code	H	L	H	12V	L	L	L	L	DOUT	31H
Serial Prog. Enable	H	L	(2)	12V	L	H	L	H	P0.0 = 0	X
Serial Prog. Disable	H	L	(2)	12V	L	H	L	H	P0.0 = 1	X
Read Serial Prog. Fuse	H	L	H	12V	H	H	L	H	@P0.0	X

Notes:
1. “h” = weakly pulled “High” internally.
2. Chip Erase and Serial Programming Fuse require a 10-ms $\overline{PROG}$ pulse. Chip Erase needs to be performed first before reprogramming any byte with a content other than FFH.
3. P3.4 is pulled Low during programming to indicate RDY/$\overline{BSY}$.
4. “X” = don’t care

Figure 14. Programming the Flash/EEPROM Memory

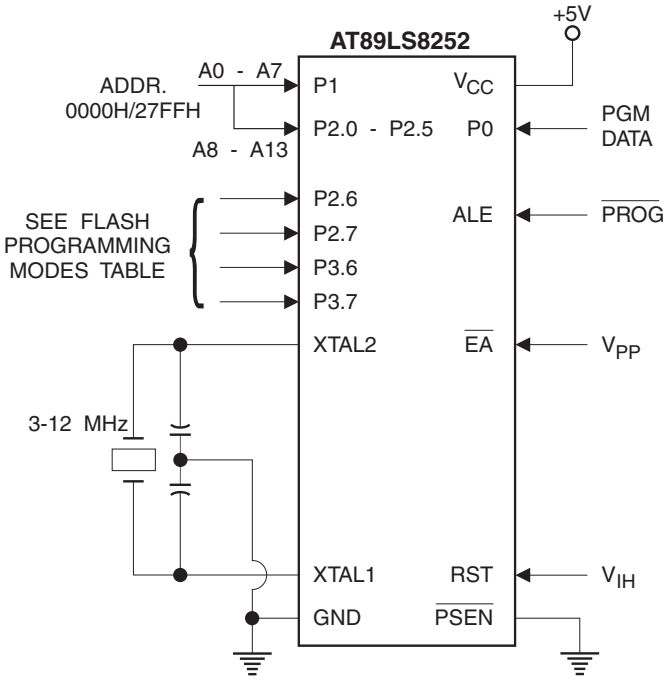

Figure 15. Flash/EEPROM Serial Downloading

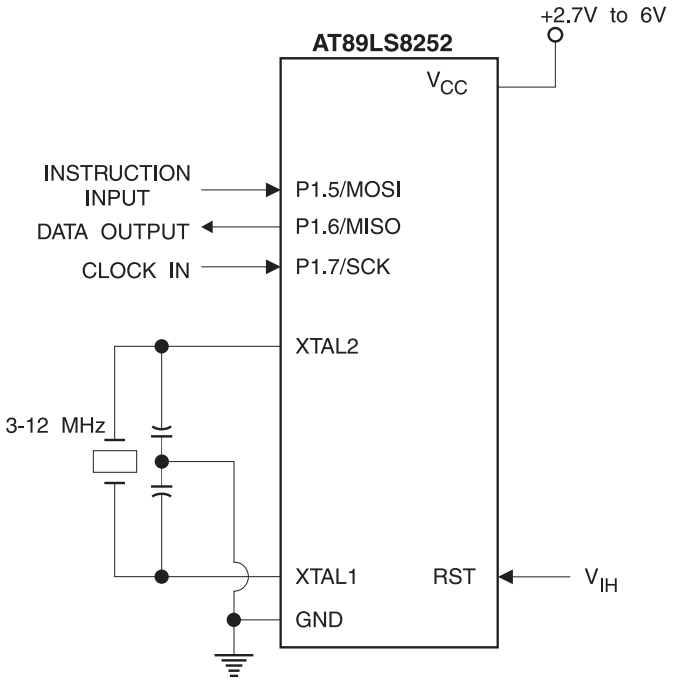

Figure 16. Verifying the Flash/EEPROM Memory

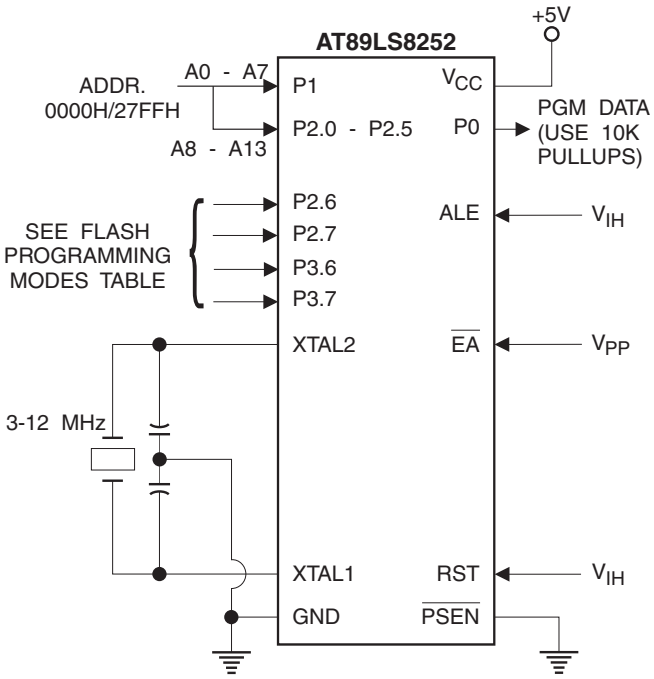

Flash Programming and Verification Characteristics - Parallel Mode

T_A = 0°C to 70°C, V_{CC} = 5.0V ± 10%

Symbol	Parameter	Min	Max	Units
V_{PP}	Programming Enable Voltage	11.5	12.5	V
I_{PP}	Programming Enable Current		1.0	mA
$1/t_{CLCL}$	Oscillator Frequency	3	12	MHz
t_{AVGL}	Address Setup to $\overline{PROG}$ Low	$48t_{CLCL}$		
t_{GHAX}	Address Hold After $\overline{PROG}$	$48t_{CLCL}$		
t_{DVGL}	Data Setup to $\overline{PROG}$ Low	$48t_{CLCL}$		
t_{GHDX}	Data Hold After $\overline{PROG}$	$48t_{CLCL}$		
t_{EHSH}	P2.7 ($\overline{ENABLE}$) High to V_{PP}	$48t_{CLCL}$		
t_{SHGL}	V_{PP} Setup to $\overline{PROG}$ Low	10		µs
t_{GLGH}	$\overline{PROG}$ Width	1	110	µs
t_{AVQV}	Address to Data Valid		$48t_{CLCL}$	
t_{ELQV}	$\overline{ENABLE}$ Low to Data Valid		$48t_{CLCL}$	
t_{EHQZ}	Data Float After $\overline{ENABLE}$	0	$48t_{CLCL}$	
t_{GHBL}	$\overline{PROG}$ High to $\overline{BUSY}$ Low		1.0	µs
t_{WC}	Byte Write Cycle Time		2.0	ms

Flash/EEPROM Programming and Verification Waveforms - Parallel Mode

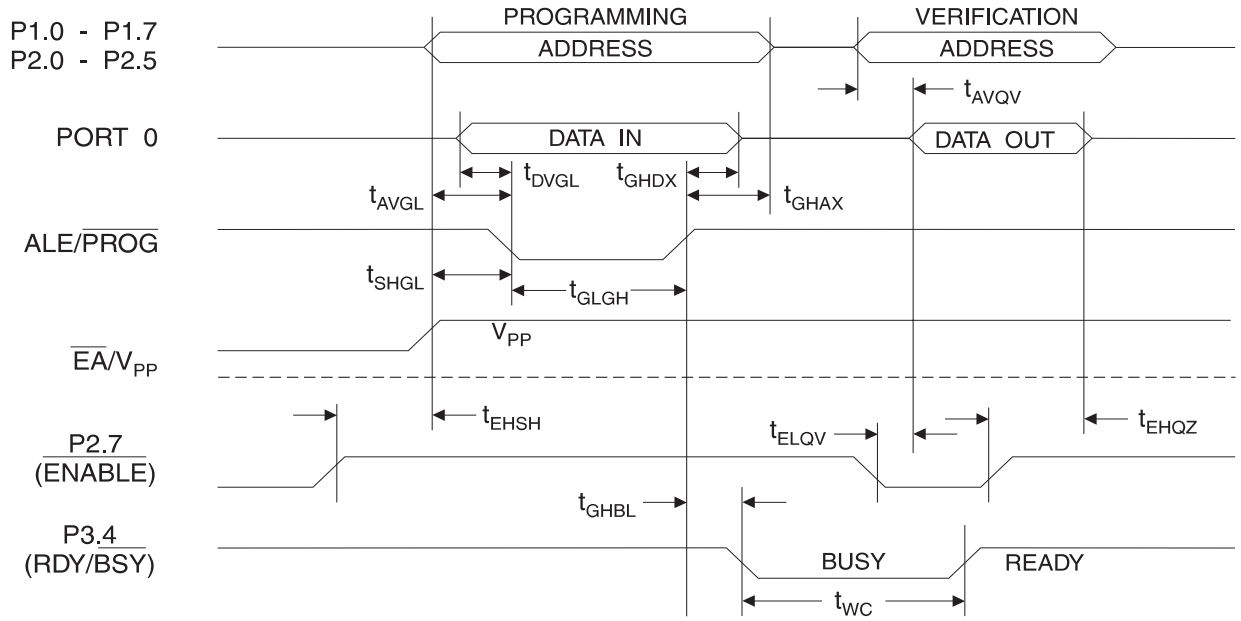

Serial Downloading Waveforms

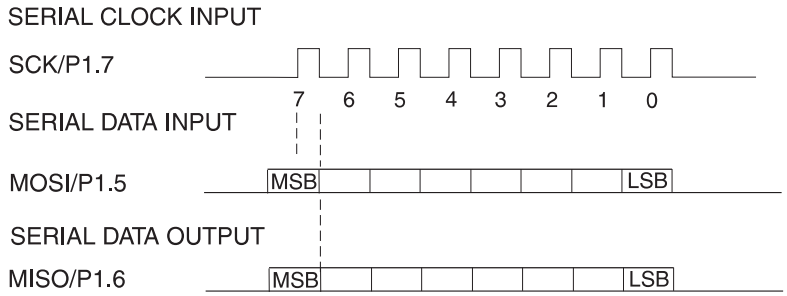

Absolute Maximum Ratings*

Operating Temperature.....-55°C to +125°C

Storage Temperature.....-65°C to +150°C

Voltage on Any Pin
with Respect to Ground.....-1.0V to +7.0V

Maximum Operating Voltage 6.6V

DC Output Current .....15.0 mA

*NOTICE: Stresses beyond those listed under "Absolute Maximum Ratings" may cause permanent damage to the device. This is a stress rating only and functional operation of the device at these or any other conditions beyond those indicated in the operational sections of this specification is not implied. Exposure to absolute maximum rating conditions for extended periods may affect device reliability.

DC Characteristics

The values shown in this table are valid for T_A = -40°C to 85°C and V_{CC} = 2.7V to 6.0V, unless otherwise noted.

Symbol	Parameter	Condition	Min	Max	Units
V_{IL}	Input Low Voltage	(Except $\overline{EA}$)	-0.5	0.2 V_{CC} - 0.1	V
V_{IL1}	Input Low Voltage ($\overline{EA}$)		-0.5	0.2 V_{CC} - 0.3	V
V_{IH}	Input High Voltage	(Except XTAL1, RST)	0.2 V_{CC} + 0.9	V_{CC} + 0.5	V
V_{IH1}	Input High Voltage	(XTAL1, RST)	0.7 V_{CC}	V_{CC} + 0.5	V
V_{OL}	Output Low Voltage (1) (Ports 1,2,3)	I_{OL} = 1.6 mA		0.5	V
V_{OL1}	Output Low Voltage (1) (Port 0, ALE, $\overline{PSEN}$)	I_{OL} = 3.2 mA		0.5	V
V_{OH}	Output High Voltage (Ports 1,2,3, ALE, $\overline{PSEN}$)	I_{OH} = -60 µA, V_{CC} = 5V ± 10%	2.4		V
		I_{OH} = -25 µA	0.75 V_{CC}		V
		I_{OH} = -10 µA	0.9 V_{CC}		V
V_{OH1}	Output High Voltage (Port 0 in External Bus Mode)	I_{OH} = -800 µA, V_{CC} = 5V ± 10%	2.4		V
		I_{OH} = -300 µA	0.75 V_{CC}		V
		I_{OH} = -80 µA	0.9 V_{CC}		V
I_{IL}	Logical 0 Input Current (Ports 1,2,3)	V_{IN} = 0.45V		-50	µA
I_{TL}	Logical 1 to 0 Transition Current (Ports 1,2,3)	V_{IN} = 2V		-650	µA
I_{LI}	Input Leakage Current (Port 0, $\overline{EA}$)	0.45 < V_{IN} < V_{CC}		±10	µA
RRST	Reset Pulldown Resistor		50	300	KΩ
C_{IO}	Pin Capacitance	Test Freq. = 1 MHz, T_A = 25°C		10	pF
I_{CC}	Power Supply Current	Active Mode, 12 MHz		25	mA
		Idle Mode, 12 MHz		6.5	mA
	Power Down Mode (2)	V_{CC} = 6V		100	µA
		V_{CC} = 3V		40	µA

Notes: 1. Under steady state (non-transient) conditions, I_{OL} must be externally limited as follows:
Maximum I_{OL} per port pin: 10 mA
Maximum I_{OL} per 8-bit port:
Port 0: 26 mA
Ports 1,2, 3: 15 mA
Maximum total I_{OL} for all output pins: 71 mA
If I_{OL} exceeds the test condition, V_{OL} may exceed the related specification. Pins are not guaranteed to sink current greater than the listed test conditions.

2. Minimum V_{CC} for Power Down is 2V

AC Characteristics

Under operating conditions, load capacitance for Port 0, ALE/$\overline{PROG}$, and $\overline{PSEN}$ = 100 pF; load capacitance for all other outputs = 80 pF.

External Program and Data Memory Characteristics

Symbol	Parameter	12MHz Oscillator		Variable Oscillator		Units
		Min	Max	Min	Max	
$1/t_{CLCL}$	Oscillator Frequency			0	12	MHz
t_{LHLL}	ALE Pulse Width	127		$2t_{CLCL}$ - 40		ns
t_{AVLL}	Address Valid to ALE Low	43		t_{CLCL} - 40		ns
t_{LLAX}	Address Hold After ALE Low	48		t_{CLCL} - 35		ns
t_{LLIV}	ALE Low to Valid Instruction In		233		$4t_{CLCL}$ - 100	ns
t_{LLPL}	ALE Low to $\overline{PSEN}$ Low	43		t_{CLCL} - 40		ns
t_{PLPH}	$\overline{PSEN}$ Pulse Width	205		$3t_{CLCL}$ - 45		ns
t_{PLIV}	$\overline{PSEN}$ Low to Valid Instruction In		145		$3t_{CLCL}$ - 105	ns
t_{PXIX}	Input Instruction Hold After $\overline{PSEN}$	0		0		ns
t_{PXIZ}	Input Instruction Float After $\overline{PSEN}$		59		t_{CLCL} - 25	ns
t_{PXAV}	$\overline{PSEN}$ to Address Valid	75		t_{CLCL} - 8		ns
t_{AVIV}	Address to Valid Instruction In		312		$5t_{CLCL}$ - 105	ns
t_{PLAZ}	$\overline{PSEN}$ Low to Address Float		10		10	ns
t_{RLRH}	$\overline{RD}$ Pulse Width	400		$6t_{CLCL}$ - 100		ns
t_{WLWH}	$\overline{WR}$ Pulse Width	400		$6t_{CLCL}$ - 100		ns
t_{RLDV}	$\overline{RD}$ Low to Valid Data In		252		$5t_{CLCL}$ - 165	ns
t_{RHDX}	Data Hold After $\overline{RD}$	0		0		ns
t_{RHDZ}	Data Float After $\overline{RD}$		97		$2t_{CLCL}$ - 70	ns
t_{LLDV}	ALE Low to Valid Data In		517		$8t_{CLCL}$ - 150	ns
t_{AVDV}	Address to Valid Data In		585		$9t_{CLCL}$ - 165	ns
t_{LLWL}	ALE Low to $\overline{RD}$ or $\overline{WR}$ Low	200	300	$3t_{CLCL}$ - 50	$3t_{CLCL}$ + 50	ns
t_{AVWL}	Address to $\overline{RD}$ or $\overline{WR}$ Low	203		$4t_{CLCL}$ - 130		ns
t_{QVWX}	Data Valid to $\overline{WR}$ Transition	23		t_{CLCL} - 60		ns
t_{QVWH}	Data Valid to $\overline{WR}$ High	433		$7t_{CLCL}$ - 150		ns
t_{WHQX}	Data Hold After $\overline{WR}$	33		t_{CLCL} - 50		ns
t_{RLAZ}	$\overline{RD}$ Low to Address Float		0		0	ns
t_{WHLH}	$\overline{RD}$ or $\overline{WR}$ High to ALE High	43	123	t_{CLCL} - 40	t_{CLCL} + 40	ns

External Program Memory Read Cycle

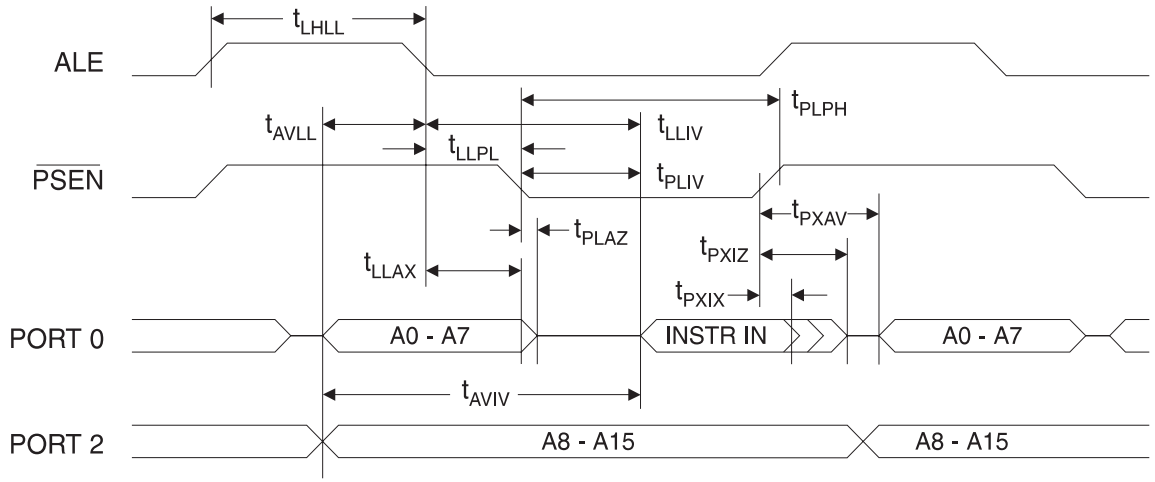

External Data Memory Read Cycle

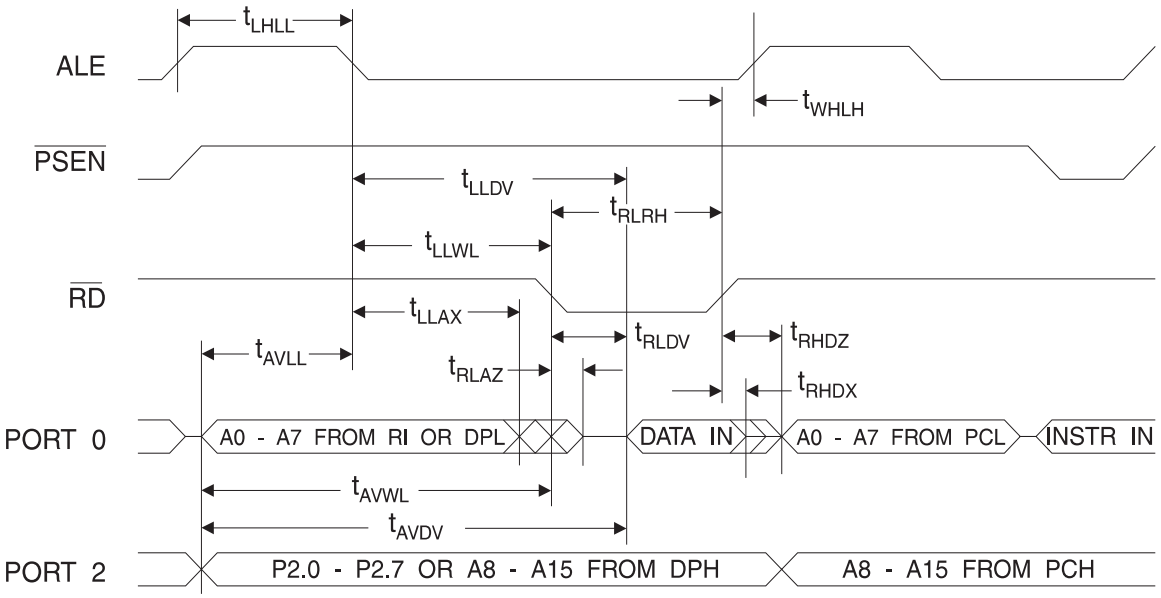

External Data Memory Write Cycle

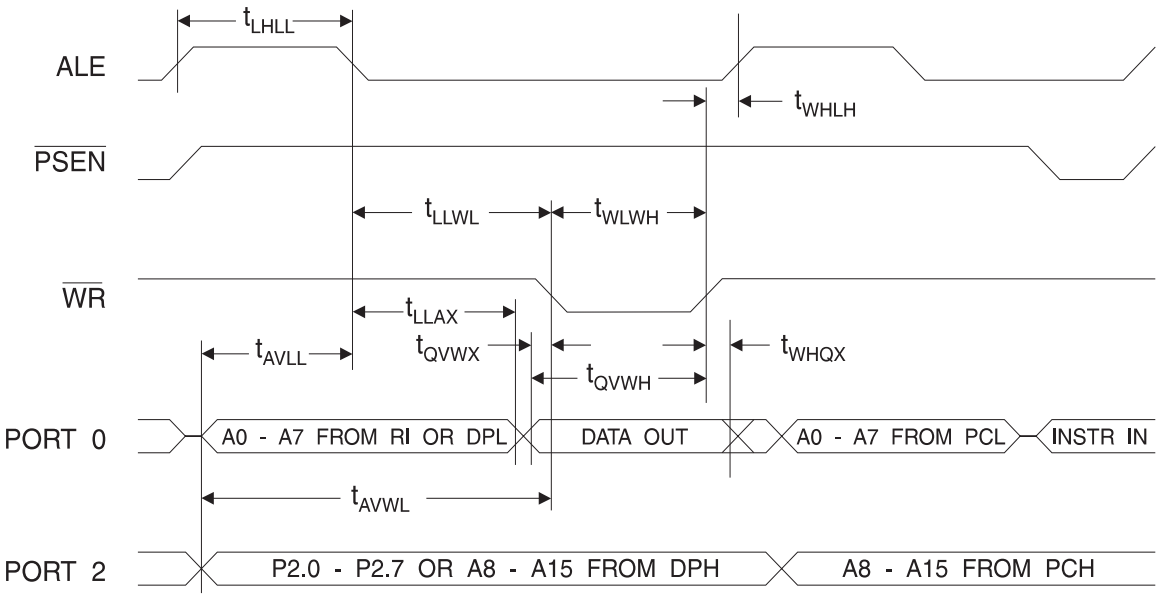

External Clock Drive Waveforms

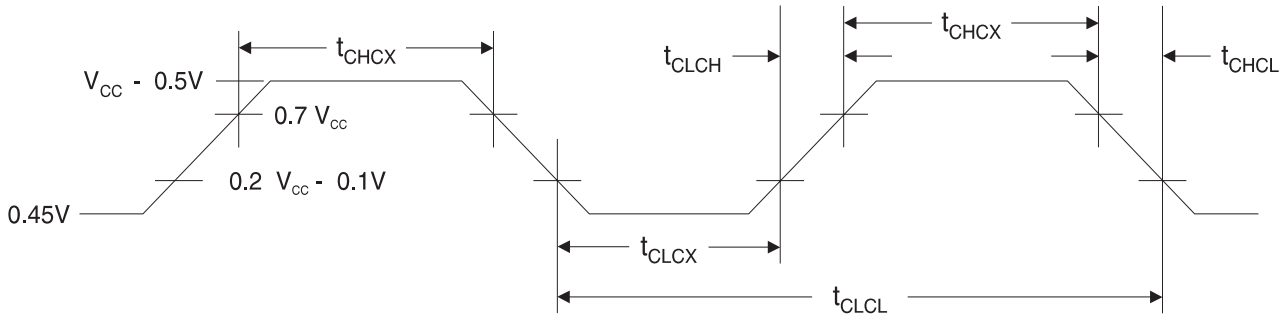

External Clock Drive

Symbol	Parameter	V_{CC} = 2.7V to 6.0V		Units
		Min	Max	
$1/t_{CLCL}$	Oscillator Frequency	0	12	MHz
t_{CLCL}	Clock Period	83.3		ns
t_{CHCX}	High Time	30		ns
t_{CLCX}	Low Time	30		ns
t_{CLCH}	Rise Time		20	ns
t_{CHCL}	Fall Time		20	ns

Serial Port Timing: Shift Register Mode Test Conditions

The values in this table are valid for V_{CC} = 2.7V to 6V and Load Capacitance = 80 pF.

Symbol	Parameter	12 MHz Oscillator		Variable Oscillator		Units
		Min	Max	Min	Max	
t_{XLXL}	Serial Port Clock Cycle Time	1.0		$12t_{CLCL}$		µs
t_{QVXH}	Output Data Setup to Clock Rising Edge	700		$10t_{CLCL}$ - 133		ns
t_{XHQX}	Output Data Hold After Clock Rising Edge	50		$2t_{CLCL}$ - 117		ns
t_{XHDX}	Input Data Hold After Clock Rising Edge	0		0		ns
t_{XHDV}	Clock Rising Edge to Input Data Valid		700		$10t_{CLCL}$ - 133	ns

Shift Register Mode Timing Waveforms

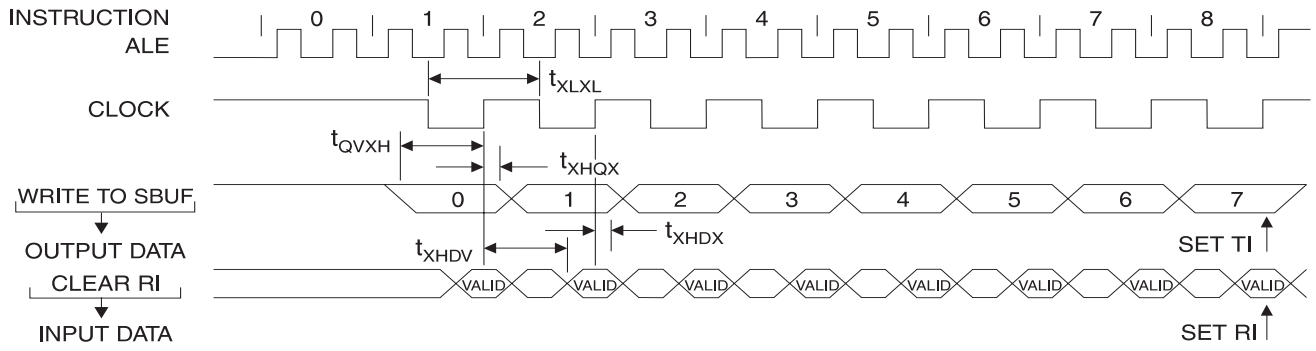

AC Testing Input/Output Waveforms (1)

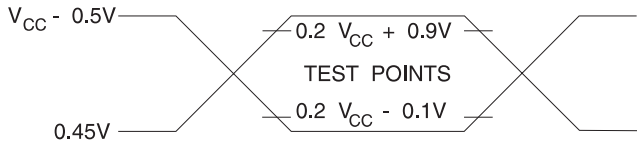

Notes: 1. AC Inputs during testing are driven at V_{CC} - 0.5V for a logic 1 and 0.45V for a logic 0. Timing measurements are made at V_{IH} min. for a logic 1 and V_{IL} max. for a logic 0.

Float Waveforms (1)

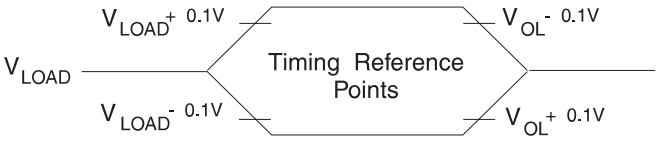

Notes: 1. For timing purposes, a port pin is no longer floating when a 100 mV change from load voltage occurs. A port pin begins to float when a 100 mV change from the loaded V_{OH}/V_{OL} level occurs.

AT89LS8252

TYPICAL ICC (ACTIVE) at 25°C

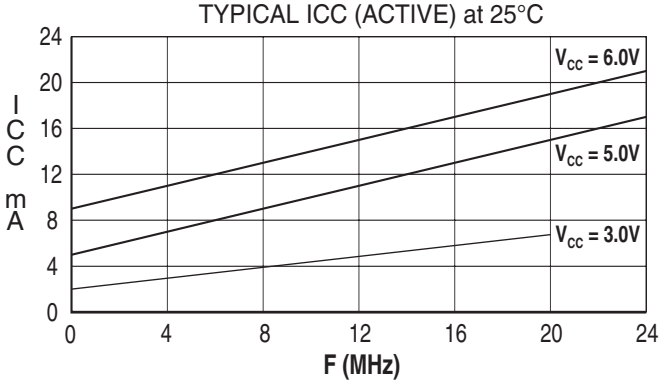

AT89LS8252

TYPICAL ICC vs. VOLTAGE - POWER DOWN (85°C)

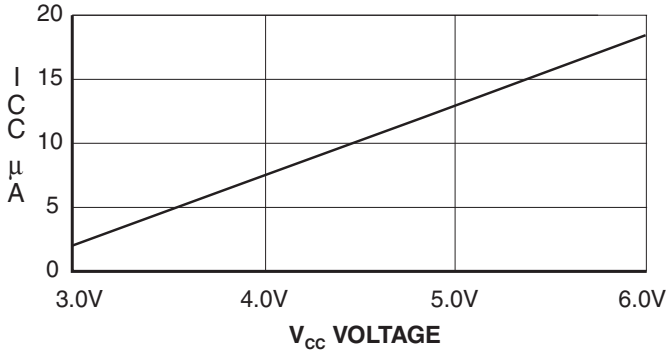

Notes: 1. XTAL1 tied to GND for I_{CC} (power down)

2. Lock bits programmed

AT89LS8252

TYPICAL ICC (IDLE) at 25°C

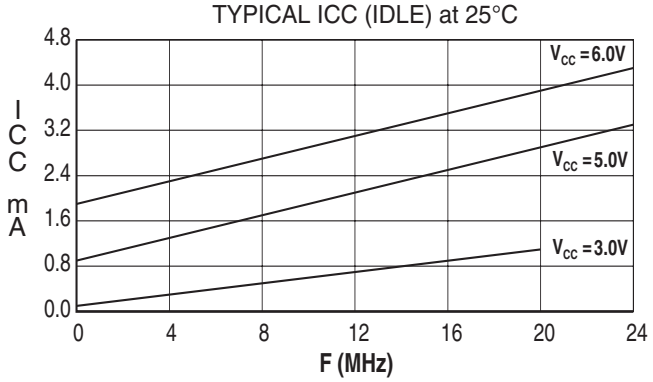

Ordering Information

Speed (MHz)	Power Supply	Ordering Code	Package	Operation Range
12	2.7V to 6.0V	AT89LS8252-12AC AT89LS8252-12JC AT89LS8252-12PC	44A 44J 40P6	Commercial (0°C to 70°C)
	2.7V to 6.0V	AT89LS8252-12AI AT89LS8252-12JI AT89LS8252-12PI	44A 44J 40P6	Industrial (-40°C to 85°C)

Package Type	
44A	44 Lead, Thin Plastic Gull Wing Quad Flatpack (TQFP)
44J	44 Lead, Plastic J-Leaded Chip Carrier (PLCC)
40P6	40 Lead, 0.600" Wide, Plastic Dual Inline Package (PDIP)

Packaging Information

44A – TQFP

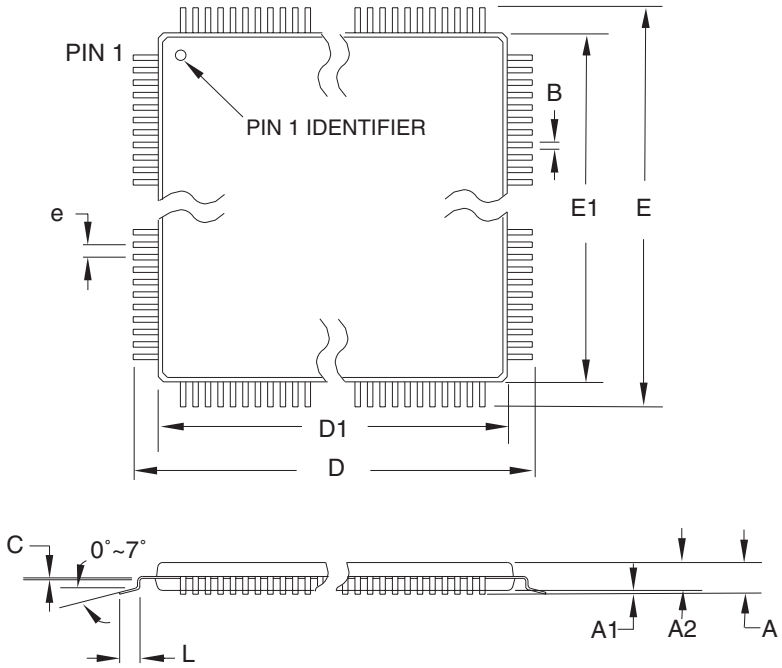

COMMON DIMENSIONS
(Unit of Measure = mm)

SYMBOL	MIN	NOM	MAX	NOTE
A	–	–	1.20	
A1	0.05	–	0.15	
A2	0.95	1.00	1.05	
D	11.75	12.00	12.25	
D1	9.90	10.00	10.10	Note 2
E	11.75	12.00	12.25	
E1	9.90	10.00	10.10	Note 2
B	0.30	–	0.45	
C	0.09	–	0.20	
L	0.45	–	0.75	
e	0.80 TYP			

Notes:
1. This package conforms to JEDEC reference MS-026, Variation ACB.
2. Dimensions D1 and E1 do not include mold protrusion. Allowable protrusion is 0.25 mm per side. Dimensions D1 and E1 are maximum plastic body size dimensions including mold mismatch.
3. Lead coplanarity is 0.10 mm maximum.

10/5/2001

	TITLE	DRAWING NO.	REV.
ATMEL 2325 Orchard Parkway San Jose, CA 95131	**44A,** 44-lead, 10 x 10 mm Body Size, 1.0 mm Body Thickness, 0.8 mm Lead Pitch, Thin Profile Plastic Quad Flat Package (TQFP)	44A	B

44J – PLCC

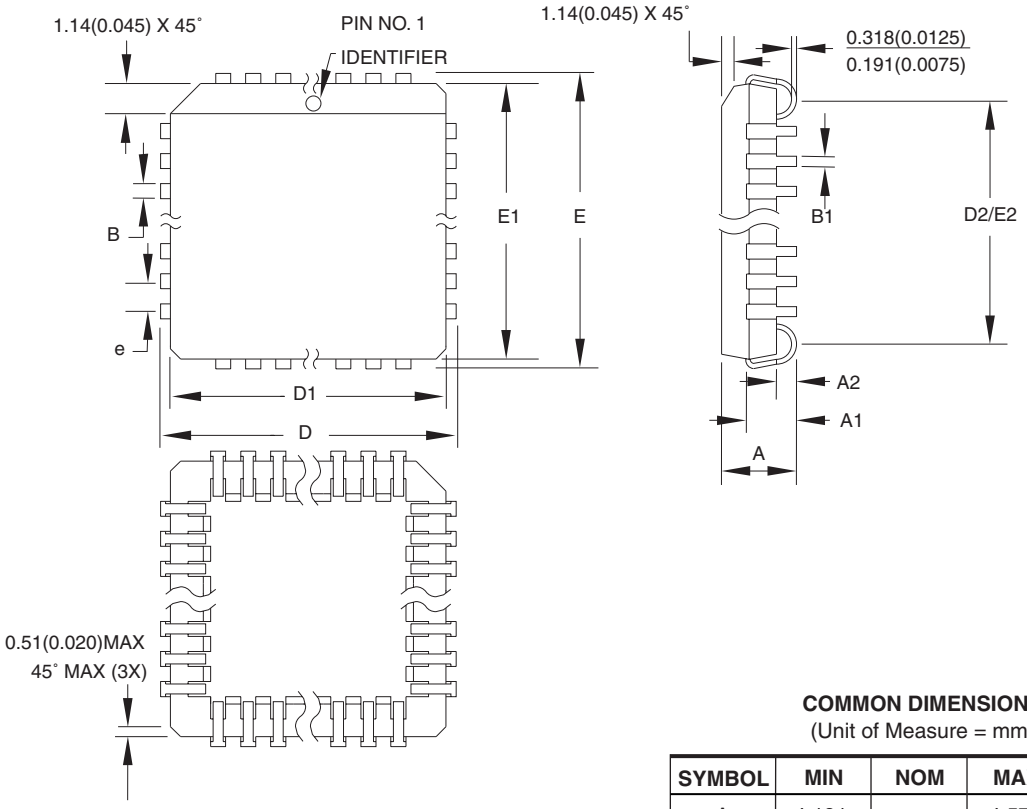

COMMON DIMENSIONS
(Unit of Measure = mm)

SYMBOL	MIN	NOM	MAX	NOTE
A	4.191	–	4.572	
A1	2.286	–	3.048	
A2	0.508	–	–	
D	17.399	–	17.653	
D1	16.510	–	16.662	Note 2
E	17.399	–	17.653	
E1	16.510	–	16.662	Note 2
D2/E2	14.986	–	16.002	
B	0.660	–	0.813	
B1	0.330	–	0.533	
e	1.270 TYP			

Notes:
1. This package conforms to JEDEC reference MS-018, Variation AC.
2. Dimensions D1 and E1 do not include mold protrusion. Allowable protrusion is .010"(0.254 mm) per side. Dimension D1 and E1 include mold mismatch and are measured at the extreme material condition at the upper or lower parting line.
3. Lead coplanarity is 0.004" (0.102 mm) maximum.

10/04/01

	TITLE	DRAWING NO.	REV.
2325 Orchard Parkway San Jose, CA 95131	**44J**, 44-lead, Plastic J-leaded Chip Carrier (PLCC)	44J	B

40P6 – PDIP

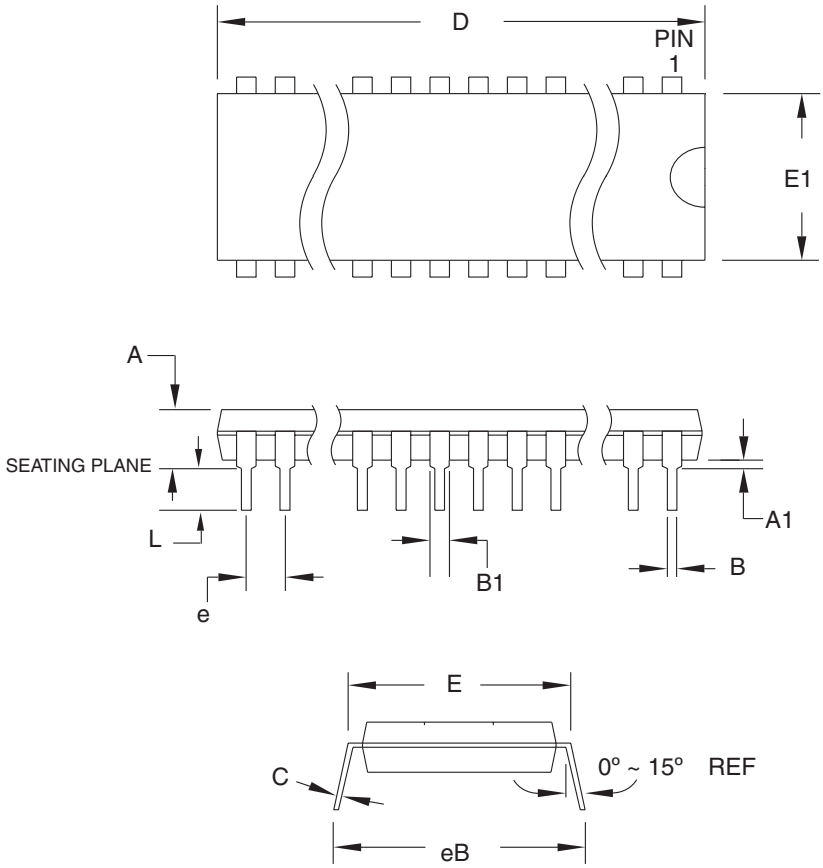

COMMON DIMENSIONS
(Unit of Measure = mm)

SYMBOL	MIN	NOM	MAX	NOTE
A	–	–	4.826	
A1	0.381	–	–	
D	52.070	–	52.578	Note 2
E	15.240	–	15.875	
E1	13.462	–	13.970	Note 2
B	0.356	–	0.559	
B1	1.041	–	1.651	
L	3.048	–	3.556	
C	0.203	–	0.381	
eB	15.494	–	17.526	
e	2.540 TYP			

Notes:
1. This package conforms to JEDEC reference MS-011, Variation AC.
2. Dimensions D and E1 do not include mold Flash or Protrusion. Mold Flash or Protrusion shall not exceed 0.25 mm (0.010").

09/28/01

	TITLE	DRAWING NO.	REV.
2325 Orchard Parkway San Jose, CA 95131	**40P6**, 40-lead (0.600"/15.24 mm Wide) Plastic Dual Inline Package (PDIP)	40P6	B

Atmel Corporation

2325 Orchard Parkway
San Jose, CA 95131, USA
Tel: 1(408) 441-0311
Fax: 1(408) 487-2600

Regional Headquarters

Europe
Atmel Sarl
Route des Arsenaux 41
Case Postale 80
CH-1705 Fribourg
Switzerland
Tel: (41) 26-426-5555
Fax: (41) 26-426-5500

Asia
Room 1219
Chinachem Golden Plaza
77 Mody Road Tsimshatsui
East Kowloon
Hong Kong
Tel: (852) 2721-9778
Fax: (852) 2722-1369

Japan
9F, Tonetsu Shinkawa Bldg.
1-24-8 Shinkawa
Chuo-ku, Tokyo 104-0033
Japan
Tel: (81) 3-3523-3551
Fax: (81) 3-3523-7581

Atmel Operations

Memory
2325 Orchard Parkway
San Jose, CA 95131, USA
Tel: 1(408) 441-0311
Fax: 1(408) 436-4314

Microcontrollers
2325 Orchard Parkway
San Jose, CA 95131, USA
Tel: 1(408) 441-0311
Fax: 1(408) 436-4314

La Chantrerie
BP 70602
44306 Nantes Cedex 3, France
Tel: (33) 2-40-18-18-18
Fax: (33) 2-40-18-19-60

ASIC/ASSP/Smart Cards
Zone Industrielle
13106 Rousset Cedex, France
Tel: (33) 4-42-53-60-00
Fax: (33) 4-42-53-60-01

1150 East Cheyenne Mtn. Blvd.
Colorado Springs, CO 80906, USA
Tel: 1(719) 576-3300
Fax: 1(719) 540-1759

Scottish Enterprise Technology Park
Maxwell Building
East Kilbride G75 0QR, Scotland
Tel: (44) 1355-803-000
Fax: (44) 1355-242-743

RF/Automotive
Theresienstrasse 2
Postfach 3535
74025 Heilbronn, Germany
Tel: (49) 71-31-67-0
Fax: (49) 71-31-67-2340

1150 East Cheyenne Mtn. Blvd.
Colorado Springs, CO 80906, USA
Tel: 1(719) 576-3300
Fax: 1(719) 540-1759

Biometrics/Imaging/Hi-Rel MPU/
High-Speed Converters/RF Datacom
Avenue de Rochepleine
BP 123
38521 Saint-Egreve Cedex, France
Tel: (33) 4-76-58-30-00
Fax: (33) 4-76-58-34-80

Literature Requests
www.atmel.com/literature

Disclaimer: The information in this document is provided in connection with Atmel products. No license, express or implied, by estoppel or otherwise, to any intellectual property right is granted by this document or in connection with the sale of Atmel products. **EXCEPT AS SET FORTH IN ATMEL'S TERMS AND CONDITIONS OF SALE LOCATED ON ATMEL'S WEB SITE, ATMEL ASSUMES NO LIABILITY WHATSOEVER AND DISCLAIMS ANY EXPRESS, IMPLIED OR STATUTORY WARRANTY RELATING TO ITS PRODUCTS INCLUDING, BUT NOT LIMITED TO, THE IMPLIED WARRANTY OF MERCHANTABILITY, FITNESS FOR A PARTICULAR PURPOSE, OR NON-INFRINGEMENT. IN NO EVENT SHALL ATMEL BE LIABLE FOR ANY DIRECT, INDIRECT, CONSEQUENTIAL, PUNITIVE, SPECIAL OR INCIDENTAL DAMAGES (INCLUDING, WITHOUT LIMITATION, DAMAGES FOR LOSS OF PROFITS, BUSINESS INTERRUPTION, OR LOSS OF INFORMATION) ARISING OUT OF THE USE OR INABILITY TO USE THIS DOCUMENT, EVEN IF ATMEL HAS BEEN ADVISED OF THE POSSIBILITY OF SUCH DAMAGES.** Atmel makes no representations or warranties with respect to the accuracy or completeness of the contents of this document and reserves the right to make changes to specifications and product descriptions at any time without notice. Atmel does not make any commitment to update the information contained herein. Unless specifically provided otherwise, Atmel products are not suitable for, and shall not be used in, automotive applications. Atmel's products are not intended, authorized, or warranted for use as components in applications intended to support or sustain life.

© Atmel Corporation 2006. All rights reserved. Atmel®, logo and combinations thereof, Everywhere You Are® and others, are registered trademarks or trademarks of Atmel Corporation or its subsidiaries. Other terms and product names may be trademarks of others.

0850C–MICRO–3/06