CAT. NO. & DIMENSIONS

NOTE3	NO. OF CONTACTS (n)	CAT. NO.	DIMENSIONS (NOTE2)		
			A ±0.2	B ±0.2	C±0.2
	4	SFW4S-2ST___	10.4	5.24	3
	5	SFW5S-2ST___	11.4	6.24	4
	6	SFW6S-2ST___	12.4	7.24	5
*	7	SFW7S-2ST___	13.4	8.24	6
	8	SFW8S-2ST___	14.4	9.24	7
*	9	SFW9S-2ST___	15.4	10.24	8
	10	SFW10S-2ST___	16.4	11.24	9
	11	SFW11S-2ST___	17.4	12.24	10
*	12	SFW12S-2ST___	18.4	13.24	11
	13	SFW13S-2ST___	19.4	14.24	12
	14	SFW14S-2ST___	20.4	15.24	13
	15	SFW15S-2ST___	21.4	16.24	14
	16	SFW16S-2ST___	22.4	17.24	15
	17	SFW17S-2ST___	23.4	18.24	16
*	18	SFW18S-2ST___	24.4	19.24	17
*	19	SFW19S-2ST___	25.4	20.24	18
	20	SFW20S-2ST___	26.4	21.24	19
*	21	SFW21S-2ST___	27.4	22.24	20
	22	SFW22S-2ST___	28.4	23.24	21
	23	SFW23S-2ST___	29.4	24.24	22
	24	SFW24S-2ST___	30.4	25.24	23
*	25	SFW25S-2ST___	31.4	26.24	24
	26	SFW26S-2ST___	32.4	27.24	25
*	27	SFW27S-2ST___	33.4	28.24	26
	28	SFW28S-2ST___	34.4	29.24	27
	29	SFW29S-2ST___	35.4	30.24	28
	30	SFW30S-2ST___	36.4	31.24	29
*	31	SFW31S-2ST___	37.4	32.24	30
*	32	SFW32S-2ST___	38.4	33.24	31

CAT. NO. SFW (n) S -2 ST__ __

SERIES — SFW

NO. OF CONTACTS — (n)

STRAIGHT TYPE — S

FOR FPC / FFC — -2

VARIATION — ST__

STM : FOR AUTOMATIC MOUNTING (SMT) WITH MOUNTING PLATE

ST : FOR AUTOMATIC MOUNTING (SMT) WITHOUT MOUNTING PLATE

PACKAGE STYLE — __

NOTES

1. THIS PRODUCT IS THE CONNECTOR, DESIGNED TO TREMINATE FPC/FFC AND COPES WITH AUTOMATIC MOUNTING (SMT).
2. SEE PART DRAWINGS FOR DIMENSIONS A.B.C.
3. PLEASE CONSULT US IN CASE OF USING PARTS WITH * MARK

ltr	ecn no	dr	date
AA	J04-0333	H.T	2004-10-13
AB	J05-0547	H.T	2005-8-30
AC	J06-0430	H.T	2006-10-19
AD	J07-0407	H.T	2007-8-9

mat'l. code

surface 58 ISO 1302

tolerance ISO 406 ISO 1101

tolerances unless otherwise specified: angles, linear

projection

mm

scale X

dr 2007-8-9

engr 2007-8-9

chr R. Shoji 2007-8-9

appd S. Nakano 2007-8-16

product family 58SF

CODE JP

title CAT. NO. TABLE FOR 1mm SPACING SMT CONNECTOR (CAT.No.SFW__S-2ST___)

dwg no JSA 93342

sheet 1 of 1

size A4

type Product Customer Drawing

sheet index | revision sheet | AD 1

Rev. AD

SC-SFWS01 form: A4

JSA93579 93836 93343 93338 93340 93341

FCIconnect.com

Copyright FCI.

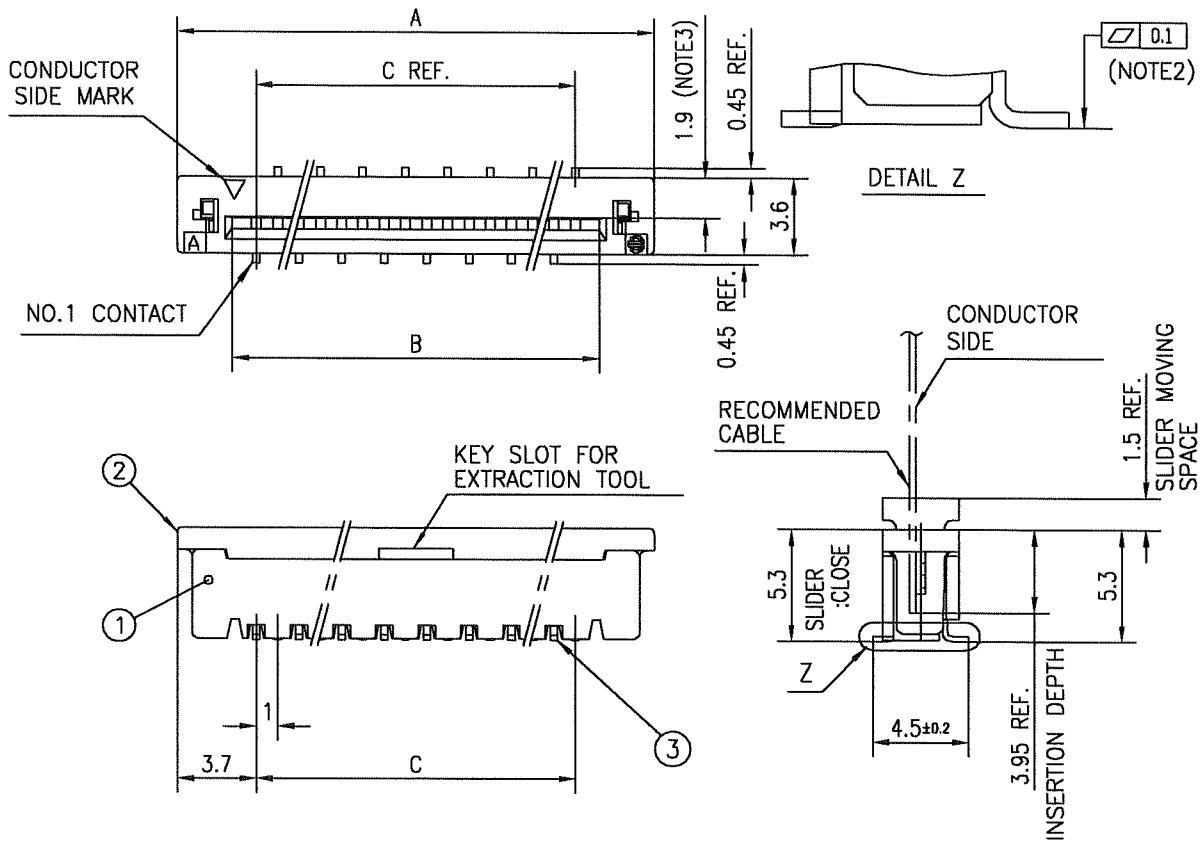

PT. NO.	PARTS NAME	MATERIAL	Q'TY	NOTE
1	HOUSING	GLASS FILLED THERMOPLASTIC RATED. (UL94V-0)	1	COLOR:BROWN
2	SLIDER		1	COLOR:BLACK
3	CONTACT	PHOSPHOR BRONZE	n	PLATING:TIN ALLOY

n : NO. OF CONTACTS

RECOMMENDED PC BOARD LAYOUT
(COMPONENT SIDE)

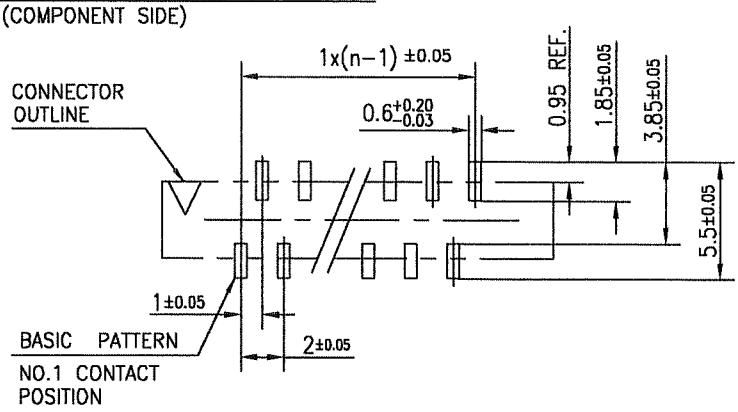

NOTES

1. THIS PRODUCT IS THE CONNECTOR DESIGNED TO TERMINATE FPC/FFC AND COPES WITH AUTOMATIC MOUNTING (SMT).
2. FLATNESS OF CONTACT TERMINAL MUST BE WITHIN TOLERANCE IN Z PORTION DETAILED DRAWING.
3. THIS DIMENSION IS SPACE FOR THE NOZZLE OF MOUNTER.

mat'l. code				surface 58 ISO 1302	tolerance ISO 406 ISO 1101	projection	product family 58SF — CODE JP
ltr	ecn no	dr	date	tolerances unless otherwise specified			title
AA	J04-0333	H.T	Oct.13,'04	angles	linear ±0.2	mm	1mm SPACING SURFACE MOUNT FPC/FFC CONNECTOR (CAT.No.SFW__S-2ST__)
AB	J06-0430	H.T	10/19/'06			scale 2	
				dr	10/19/06	FCI	dwg no JSA 93579 — sheet 1 of 1 — size A4
				engr	10/19/06		
				chr	10/19/06		
				appd	10/20/06		type Product Customer Drawing

sheet index	revision	AB	Rev. AB
	sheet	1	

SC-SFWS01 JSA93342
form: A4

FCIconnect.com
Copyright FCI.

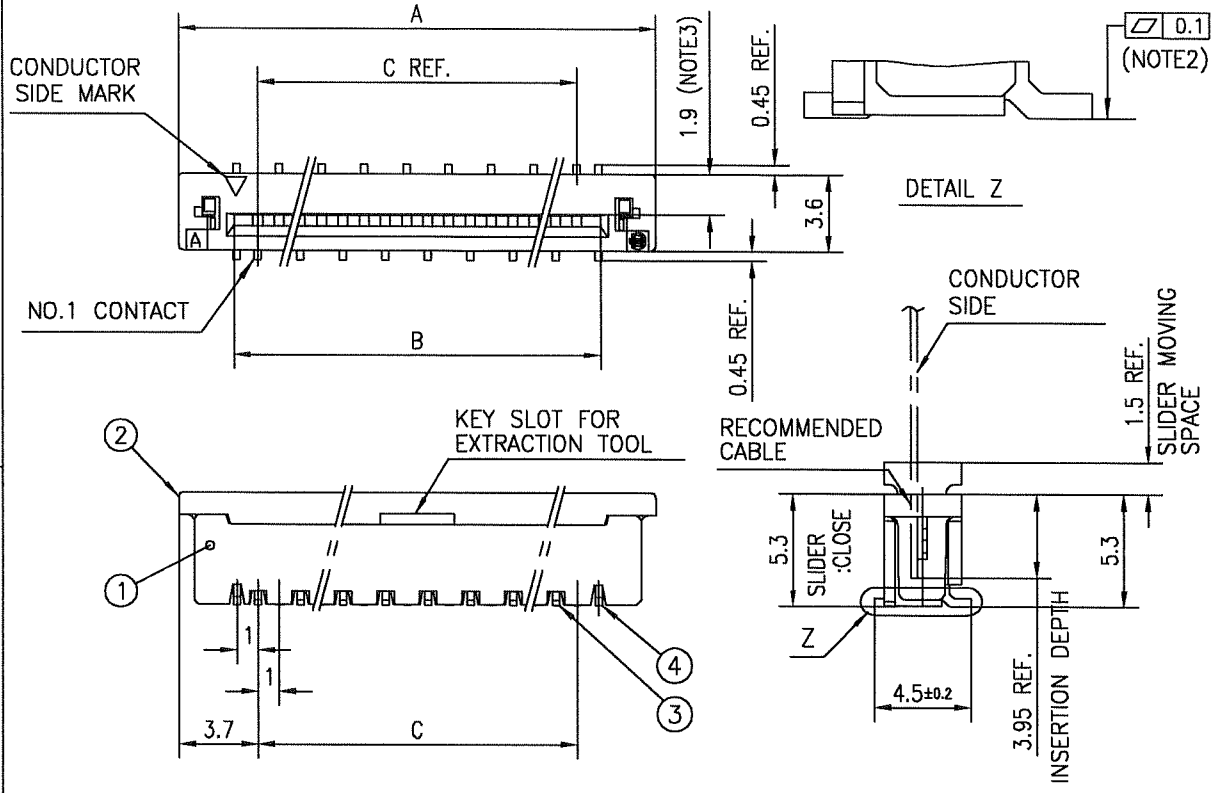

PT. NO.	PARTS NAME	MATERIAL	Q'TY	NOTE
1	HOUSING	GLASS FILLED THERMOPLASTIC RATED. (UL94V-0)	1	COLOR:BROWN
2	SLIDER		1	COLOR:BLACK
3	CONTACT	PHOSPHOR BRONZE	n	PLATING:TIN ALLOY
4	MOUNTING PLATE	BRASS	2	

n : NO. OF CONTACTS

RECOMMENDED PC BOARD LAYOUT
(COMPONENT SIDE)

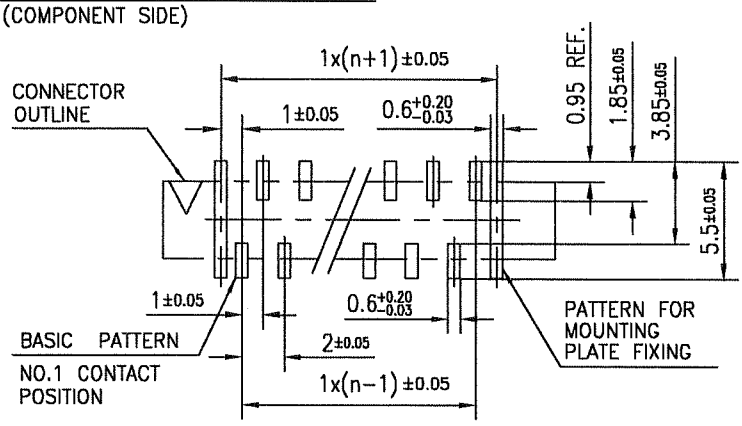

NOTES

1. THIS PRODUCT IS THE CONNECTOR DESIGNED TO TERMINATE FPC/FFC AND COPES WITH AUTOMATIC MOUNTING (SMT).
2. FLATNESS OF CONTACT TERMINAL AND MOUNTING PLATE MUST BE WITHIN TOLERANCE IN Z PORTION DETAILED DRAWING.
3. THIS DIMENSION IS SPACE FOR THE NOZZLE OF MOUNTER.

ltr	ecn no	dr	date
AA	J04-0333	H.T	Oct.13,'04
AB	J06-0430	H.T	10/19/'06

mat'l. code

surface 58 ISO 1302

tolerance ISO 406 ISO 1101

tolerances unless otherwise specified: angles; linear ±0.2

projection

mm

scale X

dr 10/19/'06
engr 10/19/'06
chr 10/19/'06
appd 10/20/'06

product family 58SF

CODE JP

title 1mm SPACING SURFACE MOUNT FPC/FFC CONNECTOR (CAT.No.SFW__S-2STM__)

dwg no JSA 93836

sheet 1 of 1

size A4

type Product Customer Drawing

sheet index	revision	AB
	sheet	1

Rev. AB

SC-SFWS01 JSA93342
form: A4

FCIconnect.com
Copyright FCI.

CAT. NO. & DIMENSIONS

(NOTE4)	NO. OF CONTACTS (n)	CAT. NO. (NOTE2)	DIMENSIONS (NOTE3)		
			D ± 5	E ± 0.3	F ± 0.1
	4	SFW4S-2ST_E1	28.4	24	—
	5	SFW5S-2ST_E1	28.4	24	—
	6	SFW6S-2ST_E1	28.4	24	—
*	7	SFW7S-2ST_E1	28.4	24	—
	8	SFW8S-2ST_E1	28.4	24	—
*	9	SFW9S-2ST_E1	28.4	24	—
	10	SFW10S-2ST_E1	28.4	24	—
	11	SFW11S-2ST_E1	28.4	24	—
*	12	SFW12S-2ST_E1	36.4	32	28.4
	13	SFW13S-2ST_E1	36.4	32	28.4
	14	SFW14S-2ST_E1	36.4	32	28.4
	15	SFW15S-2ST_E1	36.4	32	28.4
	16	SFW16S-2ST_E1	48.4	44	40.4
	17	SFW17S-2ST_E1	48.4	44	40.4
*	18	SFW18S-2ST_E1	48.4	44	40.4
*	19	SFW19S-2ST_E1	48.4	44	40.4
	20	SFW20S-2ST_E1	48.4	44	40.4
*	21	SFW21S-2ST_E1	48.4	44	40.4
	22	SFW22S-2ST_E1	48.4	44	40.4
	23	SFW23S-2ST_E1	48.4	44	40.4
	24	SFW24S-2ST_E1	48.4	44	40.4
*	25	SFW25S-2ST_E1	48.4	44	40.4
	26	SFW26S-2ST_E1	48.4	44	40.4
*	27	SFW27S-2ST_E1	60.4	56	52.4
	28	SFW28S-2ST_E1	60.4	56	52.4
	29	SFW29S-2ST_E1	60.4	56	52.4
	30	SFW30S-2ST_E1	60.4	56	52.4
*	31	SFW31S-2ST_E1	60.4	56	52.4
*	32	SFW32S-2ST_E1	60.4	56	52.4

CAT. NO. SFW (n) S – 2 ST_ ——

SERIES

NO. OF CONTACTS

STRAIGHT TYPE

FOR FPC / FFC

VARIATION
STM:FOR AUTOMATIC MOUNTING (SMT) WITH MOUNTING PLATE
ST:FOR AUTOMATIC MOUNTING (SMT) WITHOUT MOUNTING PLATE

PACKAGE STYLE

NOTES

1. THIS PRODUCT IS THE CONNECTOR DESIGNED TO TERMINATE FPC/FFC AND COPES WITH AUTOMATIC MOUNTING (SMT).
2. THIS CATALOG NO. INDICATES PLASTIC TAPE PACKAGED CONNECTOR.
3. SEE PART DRAWINGS FOR DIMENSIONS D~F.
4. PLEASE CONSULT US IN CASE OF USING PARTS WITH * MARK.

FCIconnect.com
Copyright FCI.

mat'l. code	surface ISO 1302 58	tolerance ISO 406 ISO 1101	projection	product family 58SF	CODE JP
	tolerances unless otherwise specified			title CAT NO. TABLE FOR PLASTIC TAPE PACKAGED 1mm SPACING SMT CONN. (CAT.No.SFW__S-2ST_E1)	
angles	linear		mm		
			scale X		
				dwg no JSA 93343	sheet 1 of 1 size A4
				type Product Customer Drawing	

ltr	ecn no	dr	date
AA	J04-0333	H.T	2004-10-13
AB	J05-0547	H.T	2005-8-30
AC	J06-0430	H.T	2006-10-19
AD	J07-0407	H.T	2007-8-9

dr	H. Takeuchi	2007-8-9
engr	H. Ishida	2007-8-9
chr	K. Shouji	2007-8-9
appd	S. Ikedaya	2007-8-16

sheet index	revision sheet	AD 1

Rev. AD

JSA93342 93338
form: A4

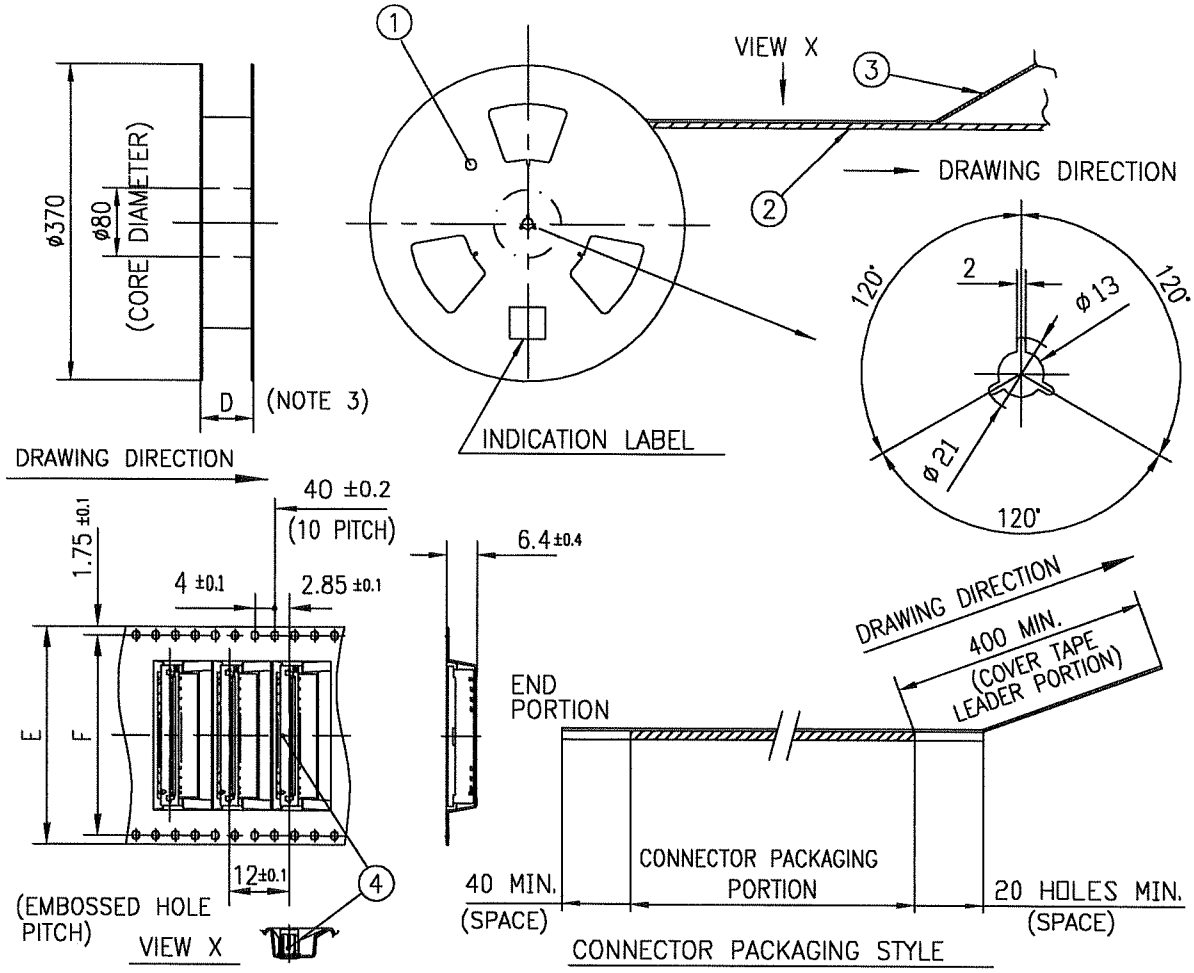

PT. NO.	PARTS NAME	CAT. NO.	MATERIAL	Q'TY	NOTE
1	REEL	———	CARDBOARD	1	COLOR:GRAY
2	PLASTIC (EMBOSSED) TAPE	———	PET	——	COLOR:TRANSPARENCY
3	COVER	———	POLYESTER	——	COLOR:TRANSPARENCY
4	CONNECTOR	SFW__S-2ST___	SEE ATTACHED DWG.	1000	———

NOTES

1. THIS IS PLASTIC TAPE PACKAGED CONNECTOR USED FOR FPC/FFC AND COPES WITH AUTOMATIC MOUNTING (SMT).
2. SEE JIS C 0806 (PACKING OF ELECTRONIC COMPONENTS ON CONTINUOUS TAPES (SURFACE MOUNTING DEVICES)) FOR SHAPE AND DIMENSIONS OF PLASTIC (EMBOSSED) TAPE AND REEL.
3. F DIMENSION IS PORTION OF THE CORE.

mat'l. code	surface 58 ISO 1302	tolerance ISO 406 ISO 1101	projection	product family 58SF	CODE JP
ltr / ecn no / dr / date	tolerances unless otherwise specified			title	
AA / J04-0333 / H.T / Oct.13,'04	angles ±5°	linear ±5	mm	PLASTIC TAPE PACKAGED 1mm SPACING SMT CONNECTOR (CATA.No.SFW__S-2ST_E1)	
AB / J06-0430 / H.T / 10/19/'06			scale X		
	dr	10/19/06	FCI	dwg no JSA 93338	sheet 1 of 1 size A4
	engr	10/19/06			
	chr	10/19/06			
	appd	10/20/06		type Product Customer Drawing	

sheet index	revision sheet	AB 1	Rev. AB

JSA93342 93343
form: A4

FCIconnect.com
Copyright FCI.

RECOMMENDED CABLE (FPC)

n : NO. OF CONDUCTORS

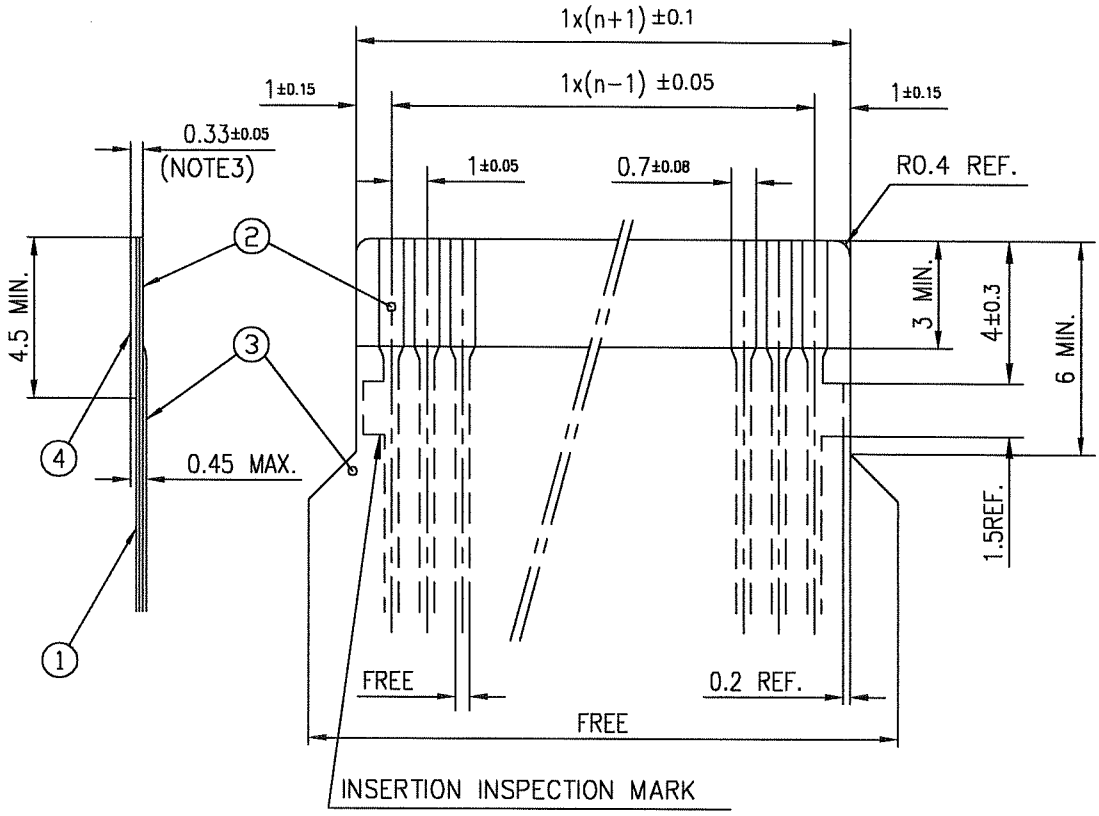

PT. NO.	DESCRIPTION	MATERIAL	THICKNESS (μm)
1	BASE FILM	POLYIMIDE OR POLYESTER OR EQUIVALENT	25
2	CONDUCTOR	COPPER FOIL(PLATING : SOLDER 1μm MIN.)	35
3	OVERLAY	POLYIMIDE OR POLYESTER OR EQUIVALENT	—
4	SUPPORTING TAPE	POLYESTER OR POLYIMIDE OR EQUIVALENT	188

NOTES

1. NO BURR AT EACH PORTION.
2. NO PEELING IN COMMON USE.
3. TOTAL THICKNESS LIMIT OF EACH MATERIAL (INCLUDING ADHESIVE AGENT) IS SPECIFIED.

FCIconnect.com
Copyright FCI.

mat'l. code				surface 58 ISO 1302	tolerance ISO 406 ISO 1101	projection	product family 58SF	CODE JP
ltr	ecn no	dr	date	tolerances unless otherwise specified			title RECOMMENDED CABLE (CAT.No.SFW__S-2ST___)
AA	J04-0333	H.T	Oct.13,'04	angles	linear	mm	
AB	J06-0430	H.T	10/19/'06			scale X	
				dr	10/19/'06	FCI	dwg no JSA 93340 sheet 1 of 1 size A4
				engr	10/19/'06		
				chr	10/19/'06		
				appd	10/20/'06		type Product Customer Drawing
sheet index	revision	AB					Rev. AB
	sheet	1					

form: A4

RECOMMENDED CABLE (FFC)

n : NO. OF CONDUCTORS

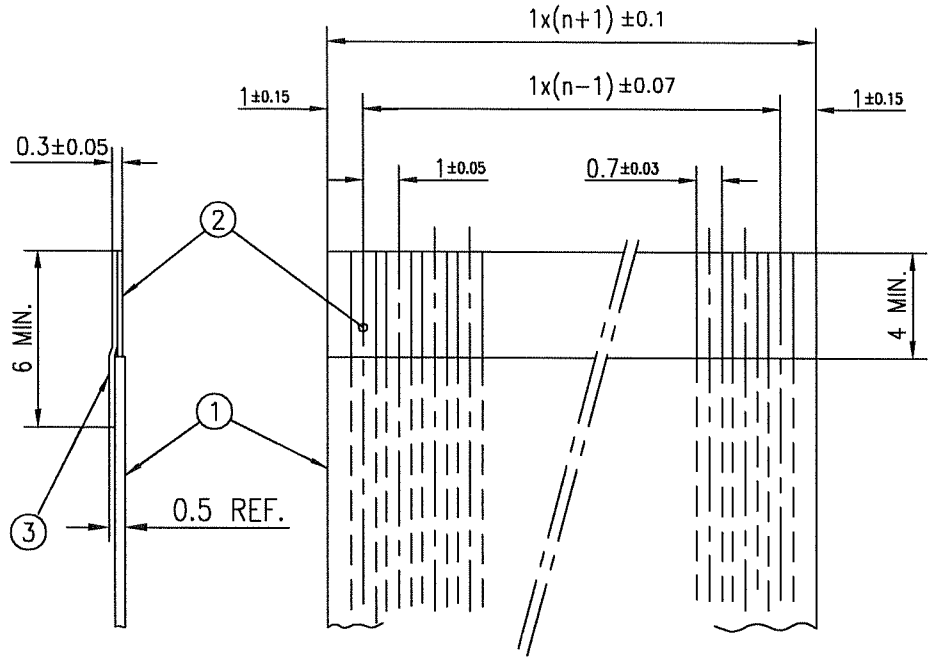

PT. NO.	DESCRIPTION	MATERIAL	NOTE
1	INSULATOR	FLAME RESISTING POLYESTER OR EQUIVALENT	———
2	CONDUCTOR	COPPER FOIL	PLATING: TIN OR SOLDER 1μm MIN.
3	SUPPORTING TAPE	FLAME RESISTING POLYESTER OR EQUIVALENT	———

NOTES

1. NO BURR AT EACH PORTION.
2. NO PEELING IN COMMON USE.

FCIconnect.com
Copyright FCI.

mat'l. code				surface 58 ISO 1302	tolerance ISO 406 ISO 1101	projection	product family 58SF	CODE JP
ltr	ecn no	dr	date	tolerances unless otherwise specified			title	
AA	J04-0333	H.T	Oct.13,'04	angles	linear	mm	RECOMMENDED CABLE (CAT.No.SFW__S-2ST___)	
AB	J06-0430	H.T	10/19/'06			scale X		
				dr	10/19/06		dwg no sheet 1 of 1	size
				engr	10/19/06		JSA 93341	A4
				chr	R. Shoup 10/19/06			
				appd	S. Cudaus 10/20/06		type Product Customer Drawing	

sheet index	revision	AB	Rev. AB
	sheet	1	

form: A4