SPECIFICATIONS		
PARAMETERS	VALUES	UNITS
DIRECTIVITY	OMNI	-
SENSITIVTY	-42 ± 3	dB
STANDARD OPERATING VOLTAGE	2.1	Vdc
MAX OPERATING VOLTAGE	3.6	Vdc
CURRENT CONSUMPTION (MAX)	200	µA
IMPEDANCE (MAX)	100	Ohm
SIGNAL TO NOISE RATIO (MIN.)	55	dBA
INTERNAL CAPACITOR	33 & 10	pF
FREQUENCY RANGE	100 ~ 7,000	Hz
OPERATING TEMPERATURE	-40 ~ +100	°C
STORAGE TEMPERATURE	-40 ~ +100	°C

THIS DOCUMENT CONTAINS DATA PROPRIETARY TO PROJECTS UNLIMITED, INC. ANY USE OR REPRODUCTION, IN ANY FORM, WITHOUT PRIOR WRITTEN PERMISSION OF PROJECTS UNLIMITED, INC. IS PROHIBITED.
©2003, Projects Unlimited Inc.

REVISION HISTORY			
LTR	DESCRIPTION	DATE	APPROVED
-	RELEASED FROM ENGINEERING	2/14/2008	

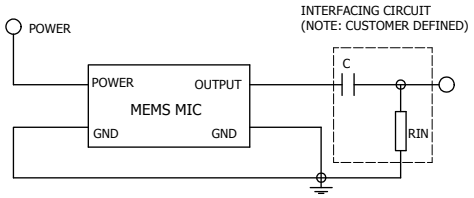

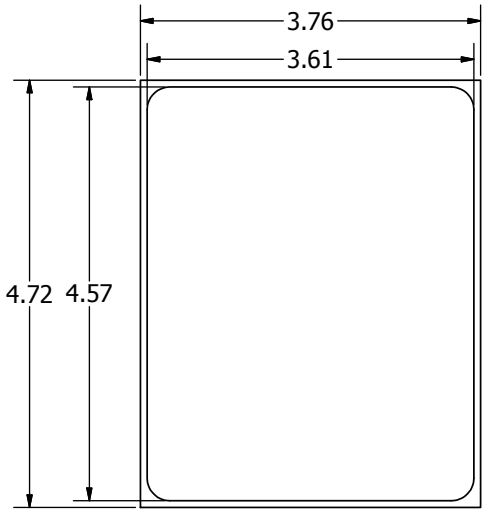

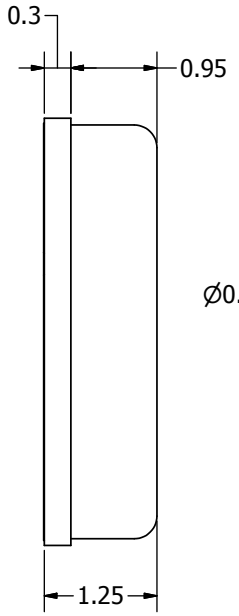

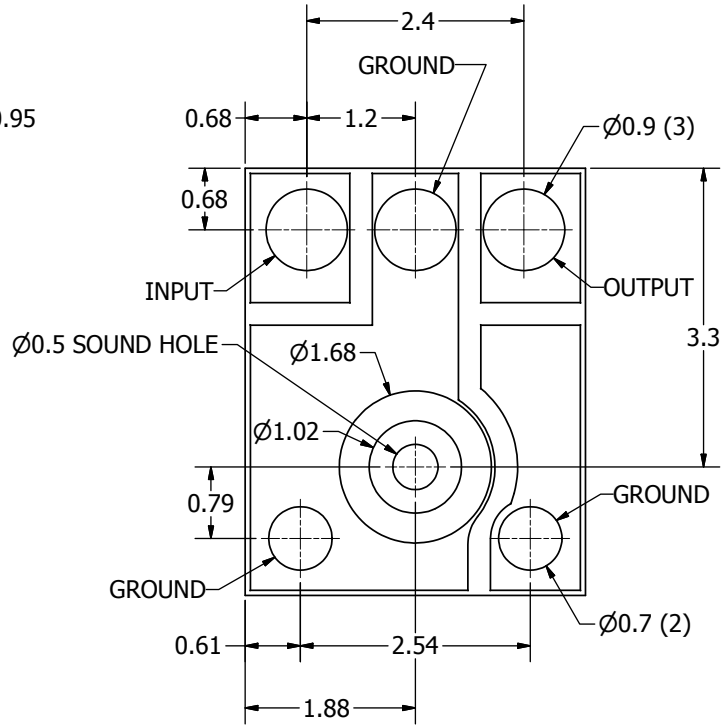

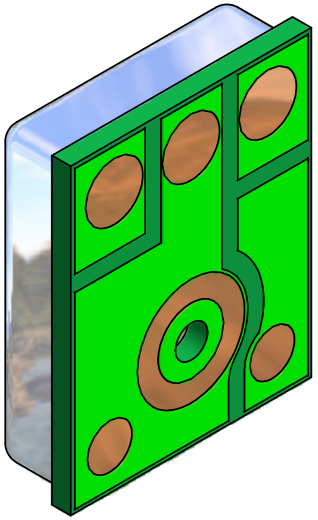

NOTES:

1. ALL DIMENSIONS ARE IN MILLIMETERS.
2. SPECIFICATIONS SUBJECT TO CHANGE OR WITHDRAWL WITHOUT NOTICE.
3. THIS PART IS RoHS 2002/95/EC COMPLIANT.
4. MAXIMUM OF 120dB INPUT SPL (FOR LESS THAN 0.5% DISTORTION).
5. OUTPUT SIGNAL @ 94dB SPL, 1KHz (-45dB/5.65mV,-40dB/10.04mV).
6. 1dB SENSITIVITY VARIATION OVER OPERATING RANGE (1.5-3.6V).

UNLESS OTHERWISE SPECIFIED: DIMENSIONS ARE IN MILLIMETERS, TOLERANCES ARE ±0.5 AND ANGLES ARE ±3°.	SIZE A3	Designed by	Date	Checked by	Date	Approved by	Date	Drawn Date
		J.D.	2/14/2008	R.W.	2/14/2008	B.R.	2/14/2008	2/14/2008
ROSM-1342RM-C3310-R.idw		pui audio A Division of Projects Unlimited		ROSM-1342RM-C3310-R				
				Microphone			Edition -	Sheet 1 / 1