THIS COPY IS PROVIDED ON A RESTRICTED BASIS AND IS NOT TO BE USED IN ANY WAY DETRIMENTAL TO THE INTERESTS OF PANDUIT CORP.

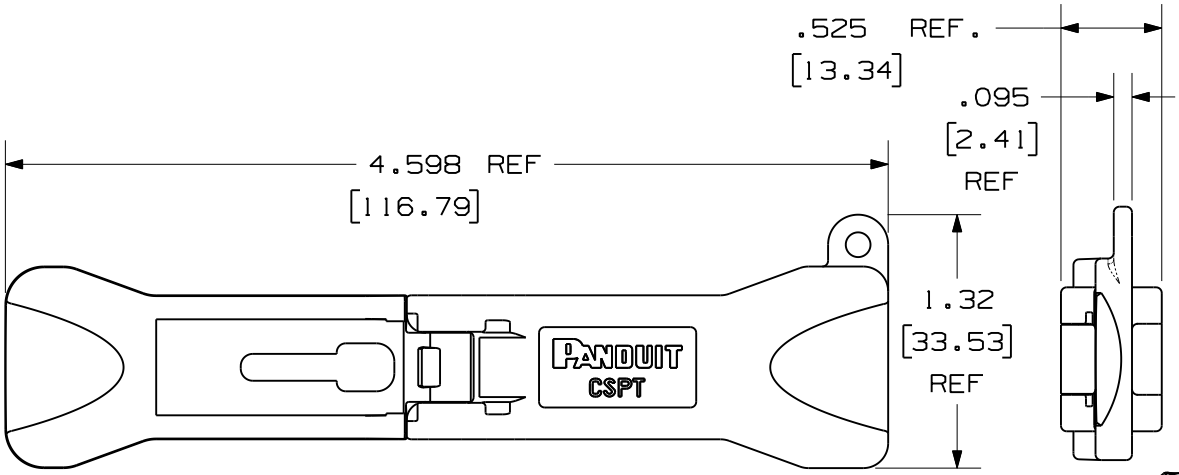

PANDUIT P/N	WEIGHT
CSPT	.28 LB/10 PCS (127.0 g/10 PCS)

NOTES:
1. SEE CURRENT CATALOG FOR PACKAGE QUANTITY.
2. SEE CATALOG FOR COMPLETE LIST OF PARTS APPLICABLE FOR USE WITH THIS PART.
3. DIMENSIONS IN PARENTHESES ARE IN METRIC.
4. MATERIAL: 20% GLASS FILLED NYLON.

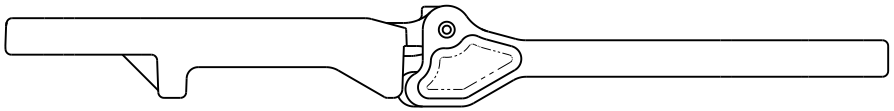

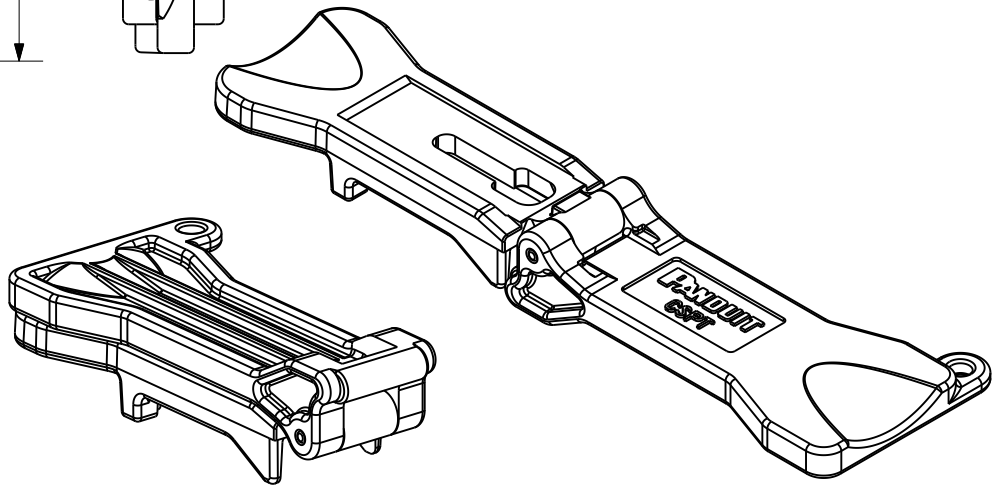

REV	DATE	BY	CHK	DESCRIPTION	ECN - R	CUST	SUP	OTH
R	1-25-08	MDJr		RELEASED TO PRODUCTION	01558-01			

MODEL FILENAME: M01558BA_CGJT_ASSY_00.PRT
DRAWING FILENAME: M01558BA_DC01_00A.PRT
SIZE: A

TITLE: TX6™ MODULAR PLUG TERMINATION TOOL CUSTOMER DRAWING

PANDUIT® CORP.
TINLEY PARK, IL 60477

THIRD ANGLE PROJECTION

ALL DIMENSIONS ARE GIVEN IN INCHES, UNLESS OTHERWISE SPECIFIED.
DIMENSIONAL TOLERANCES ARE:
(.X) ± (.XXX) ±
(.XX) ± ANGLES ±

DRAWN BY: MDJr
DATE: 11-19-02
CHK'D:
REVIEW DRAWING NUMBERS

I.I. NUMBER: NS-0598
PRODUCT SPEC:
WORK INSTRUCTION:
SCALE: FULL
PART NO.: CSPT
DRAWING NO.: 01558-01