THIS DRAWING IS UNPUBLISHED. RELEASED FOR PUBLICATION - , - .
© COPYRIGHT - By - ALL RIGHTS RESERVED.

LOC	DIST
CM	00

REVISIONS

P	LTR	DESCRIPTION	DATE	DWN	APVD
	B1	REVISED PER ECO-11-017228	25AUG11	HMR	MS

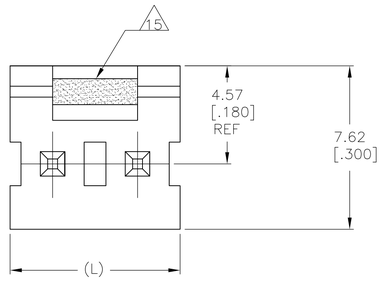

1. POST TO WITHSTAND 13 NEWTONS (3 LBS.) MIN. AXIAL FORCE IN BOTH DIRECTIONS SHOWN WITHOUT DISLODGING.
2. TOLERANCES APPLY TO SOLDER SIDE OF BOARD.
4. PLASTIC FLASH PERMITTED IN THIS AREA.
5. PARTS COMPLY WITH AMP SOLDERABILITY SPEC. NO. 109-11-2.
6. ONE HOLE MAY BE UNDERSIZED (1.65 [.065]/1.52 [.060] DIA.) FOR ASSEMBLY RETENTION DURING WAVE SOLDERING.
7. MATERIAL: HEADER-THERMOPLASTIC POLYESTER
   GLASS-FILLED 94V-0 (NATURAL)
   POST-COPPER ALLOY (TIN PLATED)
8. COORDINATE DIMENSION APPLIES FROM CENTER OF ACTUAL FEATURE.
9. PLASTIC BURRS CAUSED BY CUT-OFF TOOLING ARE PERMITTED WITHIN THE MAXIMUM TOLERANCE ENVELOPE.
11. POST MUST WITHSTAND TWO 90° BENDS AGAINST EXTRUSION WITHOUT BREAKING.
12. DIMENSION SHOULD BE 4.45 [.175] MIN WHEN MATING WITH AN MTA 156 CONNECTOR ASSEMBLY OR AN SL-156 CONNECTOR ASSEMBLY.
13. PIN BURR OF 0.13 [.005] MAX. VERTICAL AND 0.08 [.003] MAXIMUM HORIZONTAL PERMITTED AT POST TIPS ON BOTH ENDS.
14. SPECIAL PACKAGING VARIATION FOR IMPROVED PRODUCT PROTECTION.
15. GREEN STRIPE.

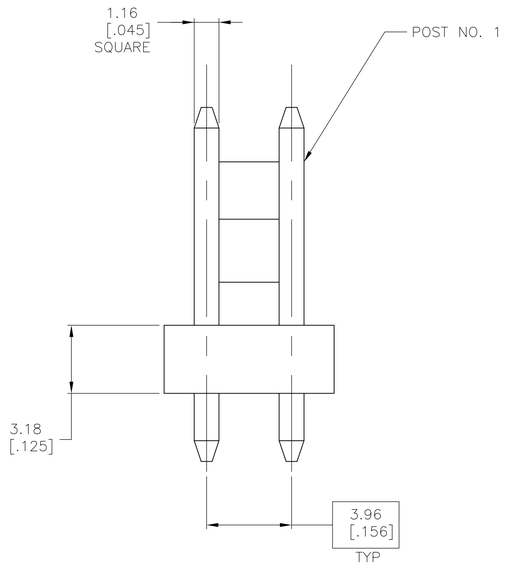

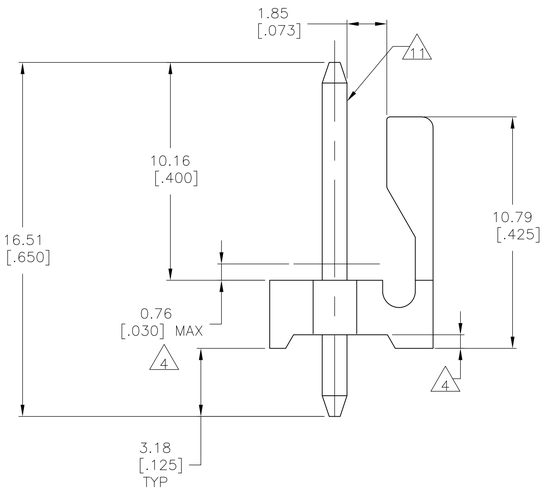

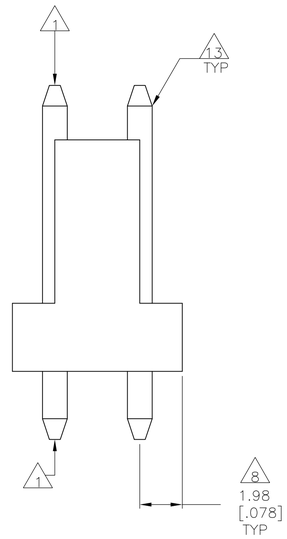

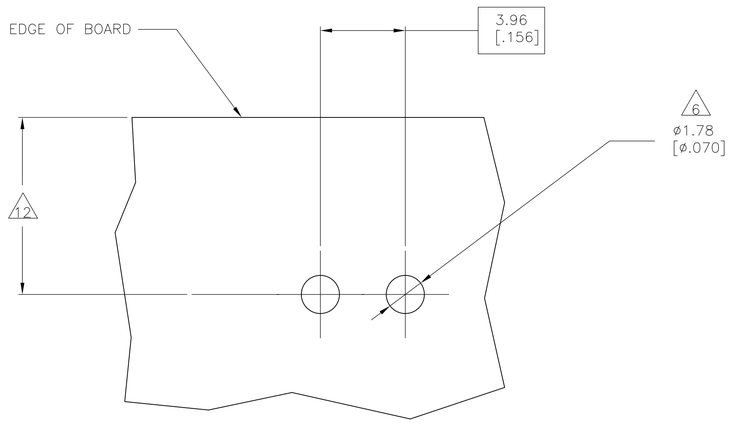

RECOMMENDED MOUNTING HOLE PATTERN FOR 1.60 [.063] THICK P.C. BOARD 2

7.92	.312	2	1744002-2
MM	[IN]	NUMBER OF POSITIONS	PART NUMBER
L			

THIS DRAWING IS A CONTROLLED DOCUMENT.

DIMENSIONS: mm [INCHES]

TOLERANCES UNLESS OTHERWISE SPECIFIED:
0 PLC ± -
1 PLC ± -
2 PLC ± 0.38[.015]
3 PLC ± 0.13[.005]
4 PLC ± -
ANGLES ± -

MATERIAL 7 FINISH 7

METRIC

DWN S. HOOVER 18DEC03
CHK D. BOSSI 18DEC03
APVD D. BOSSI 18DEC03
PRODUCT SPEC —
APPLICATION SPEC —
WEIGHT —

TE Connectivity

NAME MAT-156 HEADER ASSEMBLY, FRICTION LOCK, STRAIGHT 1.14 [.045] SQUARE POST, TIN PLATED

SIZE	CAGE CODE	DRAWING NO	RESTRICTED TO
A1	00779	C-1744002	—

CUSTOMER DRAWING | SCALE 7:1 | SHEET 1 OF 1 | REV B1

4805 (3/11)