THIS DRAWING IS UNPUBLISHED. RELEASED FOR PUBLICATION - ,N/A .
© COPYRIGHT N/A By - ALL RIGHTS RESERVED.

LOC	DIST
—	—

REVISIONS

P	LTR	DESCRIPTION	DATE	DWN	APVD
	T	REV PER ECO-15-016062	09NOV15	KG	CD

1. THIS RCPT. IS DESIGNED TO CONFORM TO THE LATEST ISSUE OF MIL-C-24308.
2. MAX WIRE INSUL TO BE USED WITH THIS RCPT. IS ø.054.
3. METAL RETENTION CLIPS ARE INCLUDED IN INSERTS.
4. PACKAGE STAMPED M 24308/2-287F.
5. THIS RCPT. WILL ACCEPT SIZE 22 SOCKET CONTACT M 39029/57-354 OR ANY TYCO HDD-22 SOCKET CONTACT.
6. MFG'S PART NO. STAMPED ON CONNECTOR REPRESENTS KIT NUMBER WITH CONTACTS.
7. UL/CSA DESIGNATION STAMPED ON SHELL.
8. 204514 INK STAMPED, NEAR SIDE. M24308/2-12F INK STAMPED, FAR SIDE.
9. 204502-4 INK STAMPED, NEAR SIDE.
10. FINISH: BRIGHT TIN PER ASTM-B-545, .000400-.000550 THK OVER COPPER PER AMS2418, .000050 MIN THK.

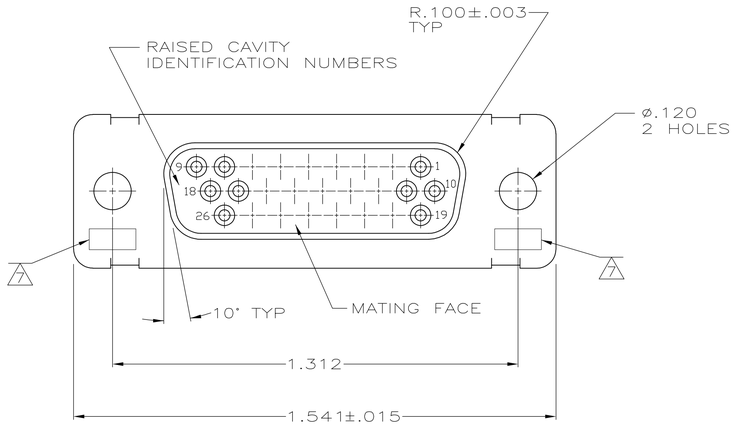

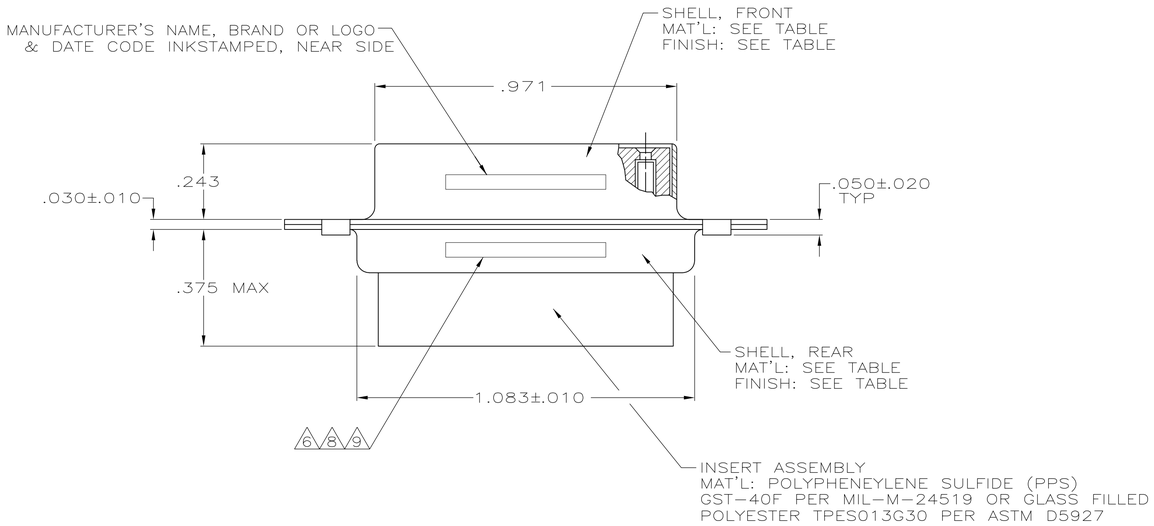

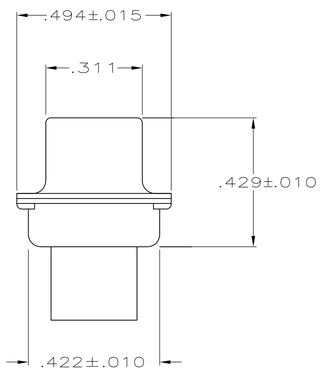

	9	10	STEEL, CLASS G	204502-4
SUPSD BY 204502-1	-	CADMIUM PER QQ-P-416	STEEL, CLASS G	204502-3
SUPSD BY 206501-4	-	CADMIUM PER QQ-P-416	BRASS	204502-2
	4 6 8	CADMIUM PER QQ-P-416	STEEL, CLASS G	204502-1
	REMARKS	FINISH	SHELL MATERIAL	PART NO.

THIS DRAWING IS A CONTROLLED DOCUMENT.

DIMENSIONS: INCHES

TOLERANCES UNLESS OTHERWISE SPECIFIED:
0 PLC ± -
1 PLC ± -
2 PLC ± -
3 PLC ± .005
4 PLC ± -
ANGLES ± 0°30'

MATERIAL: SEE TABLE
FINISH: SEE TABLE

DWN C.C.THOMAS 01-DEC-87
CHK F.C.BALLEW 25-JAN-88
APVD F.C.BALLEW 25-JAN-88
PRODUCT SPEC —
APPLICATION SPEC —
WEIGHT —

TE Connectivity

NAME: AMPLIMITE RCPT. FOR SOCKET CONTACTS HI-DENSITY D CONNECTOR SIZE 2 (26 POSN) SERIES 90

SIZE	CAGE CODE	DRAWING NO	RESTRICTED TO
A1	00779	C-204502	—

CUSTOMER DRAWING | SCALE 4:1 | SHEET 1 OF 1 | REV T

4805 (3/11)