THIS DRAWING IS UNPUBLISHED. RELEASED FOR PUBLICATION 20
© COPYRIGHT 20 - ALL RIGHTS RESERVED.

LOC	DIST
CM	00

REVISIONS

P	LTR	DESCRIPTION	DATE	DWN	APVD
	B1	REVISED PER ECR-12-007353	18MAY2012	KH	TM

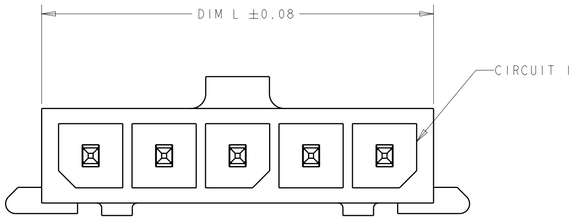

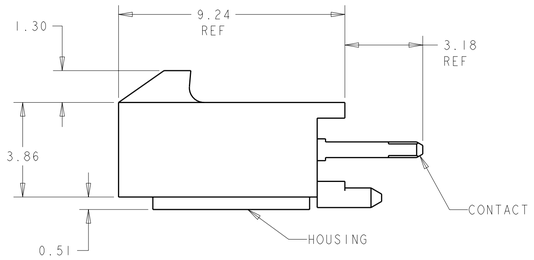

1. MATERIAL: CONTACTS - BRASS
HOUSING - UL 94V-0 RATED HIGH TEMP NYLON, COLOR BLACK.

2. PLATING: CONTACTS - 0.76µm MINIMUM GOLD ON MATING END,
2.54µm MINIMUM TIN LEAD ON SOLDER TAILS, BOTH OVER
1.27µm MINIMUM NICKEL.

4. RECOMMENDED PC BOARD THICKNESS OF 1.57.

5. RETENTION BUMP FEATURES FACE EACH OTHER, TYPICAL
ALL CONFIGURATIONS.

6. PLATING: CONTACTS - 0.76µm MINIMUM GOLD ON MATING END,
2.54µm MINIMUM MATTE TIN ON SOLDER TAILS, BOTH OVER
1.27µm MINIMUM NICKEL.

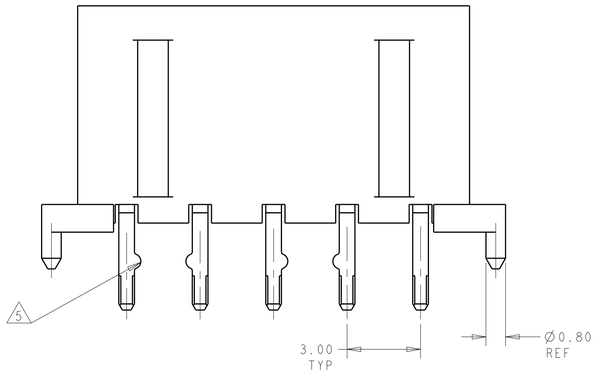

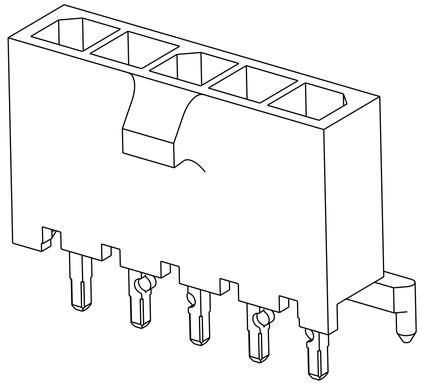

6	1,2,11,12	33.00	39.14	37.00	12	3-1445093-2
6	1,2,9,10	30.00	36.14	34.00	11	3-1445093-1
6	1,2,9,10	27.00	33.14	31.00	10	3-1445093-0
6	1,2,7,8	24.00	30.14	28.00	9	2-1445093-9
6	1,2,7,8	21.00	27.14	25.00	8	2-1445093-8
6	1,2,5,6	18.00	24.14	22.00	7	2-1445093-7
6	1,2,5,6	15.00	21.14	19.00	6	2-1445093-6
6	1,2,3,4	12.00	18.14	16.00	5	2-1445093-5
6	1,2,3,4	9.00	15.14	13.00	4	2-1445093-4
6	1,2	6.00	12.14	10.00	3	2-1445093-3
6	1,2	3.00	9.14	7.00	2	2-1445093-2
2	1,2,11,12	33.00	39.14	37.00	12	1-1445093-2
2	1,2,9,10	30.00	36.14	34.00	11	1-1445093-1
2	1,2,9,10	27.00	33.14	31.00	10	1-1445093-0
2	1,2,7,8	24.00	30.14	28.00	9	1445093-9
2	1,2,7,8	21.00	27.14	25.00	8	1445093-8
2	1,2,5,6	18.00	24.14	22.00	7	1445093-7
2	1,2,5,6	15.00	21.14	19.00	6	1445093-6
2	1,2,3,4	12.00	18.14	16.00	5	1445093-5
2	1,2,3,4	9.00	15.14	13.00	4	1445093-4
2	1,2	6.00	12.14	10.00	3	1445093-3
2	1,2	3.00	9.14	7.00	2	1445093-2
FINISH	CON POS W/RET BUMP 5	DIM Z	DIM V	DIM L	NO. OF POSN	PART NUMBER

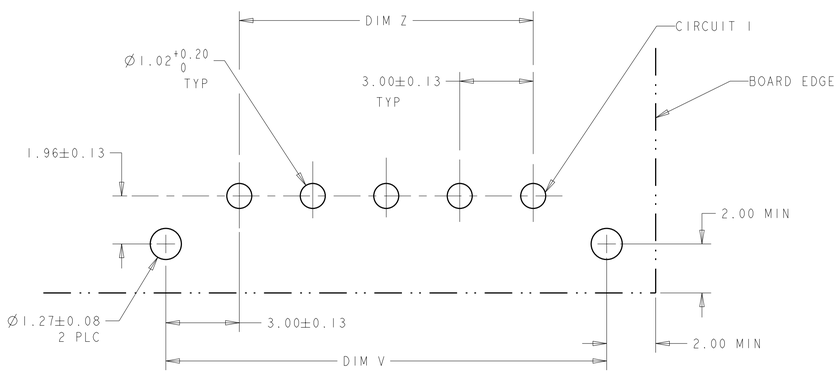

THIS DRAWING IS A CONTROLLED DOCUMENT.

DIMENSIONS: mm

TOLERANCES UNLESS OTHERWISE SPECIFIED:
0 PLC ±-
1 PLC ±-
2 PLC ±0.20
3 PLC ±-
4 PLC ±-
ANGLES ±-

MATERIAL: 1
FINISH: 2 6

DWN J. ROOT 100CT2000
CHK K. WHITAKER 17-APR-2001
APVD C. JONES 17-APR-2001
PRODUCT SPEC -
APPLICATION SPEC -
WEIGHT -

TE Connectivity

NAME VERTICAL THRU HOLE HEADER ASSY, 0.76 MIC GOLD CONTACTS, W/PCB PLZN FEATURE, SGL ROW, MICRO MATE-N-LOK(TM)

SIZE A1 | CAGE CODE 00779 | DRAWING NO C-1445093 | RESTRICTED TO -

CUSTOMER DRAWING | SCALE 8:1 | SHEET 1 OF 1 | REV B1

4805 (3/11)

Pro/ENGINEER DRAWING

PCB LAYOUT COMPONENT SIDE 4