PDTA114EMB

50 V, 100 mA PNP resistor-equipped transistor; R1 = 10 kΩ, R2 = 10 kΩ

19 February 2024 | Product data sheet

1. General description

PNP Resistor-Equipped Transistor (RET) in a leadless ultra small DFN1006B-3 (SOT883B) Surface-Mounted Device (SMD) plastic package.

NPN complement: PDTC114EMB

2. Features and benefits

- 100 mA output current capability
- Reduces component count
- Built-in bias transistors
- Reduces pick and place costs
- Simplifies circuit design
- Leadless ultra small SMD plastic package
- Low package height of 0.37 mm
- AEC-Q101 qualified

3. Applications

- Low-current peripheral driver
- Replaces general-purpose transistors in digital applications
- Control of IC inputs
- Mobile applications

4. Quick reference data

Table 1. Quick reference data

Symbol	Parameter	Conditions		Min	Typ	Max	Unit
V_{CEO}	collector-emitter voltage	open base		-	-	-50	V
I_O	output current			-	-	-100	mA
R1	bias resistor 1 (input)	T_{amb} = 25 °C		7	10	13	kΩ
R2/R1	bias resistor ratio			0.8	1	1.2	

5. Pinning information

Table 2. Pinning information

Pin	Symbol	Description	Simplified outline	Graphic symbol
1	I	input (base)	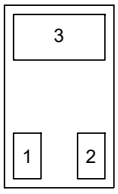 Transparent top view **DFN1006B-3 (SOT883B)**	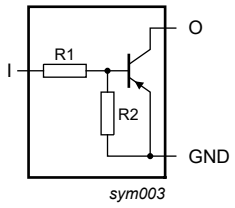
2	G	GND (emitter)		
3	O	output (collector)		

6. Ordering information

Table 3. Ordering information

Type number	Package		
	Name	Description	Version
PDTA114EMB	DFN1006B-3	plastic, leadless ultra small plastic package; 3 solder lands; 0.35 mm pitch; 1.0 mm x 0.6 mm x 0.37 mm body	SOT883B

7. Marking

Table 4. Marking codes

Type number	Marking code
PDTA114EMB	0001 1001

8. Limiting values

Table 5. Limiting values

In accordance with the Absolute Maximum Rating System (IEC 60134).

Symbol	Parameter	Conditions		Min	Max	Unit
V_{CBO}	collector-base voltage	open emitter		-	-50	V
V_{CEO}	collector-emitter voltage	open base		-	-50	V
V_{EBO}	emitter-base voltage	open collector		-	-10	V
V_I	input voltage			-40	10	V
I_O	output current			-	-100	mA
I_{CM}	peak collector current	$t_p \leq$ 1 ms; pulsed		-	-100	mA
P_{tot}	total power dissipation	$T_{amb} \leq$ 25 °C	[1]	-	250	mW
T_j	junction temperature			-	150	°C
T_{amb}	ambient temperature			-65	150	°C
T_{stg}	storage temperature			-65	150	°C

[1] Device mounted on an FR4 Printed-Circuit Board (PCB), single-sided copper, tin-plated and standard footprint.

All information provided in this document is subject to legal disclaimers.

© Nexperia B.V. 2024. All rights reserved

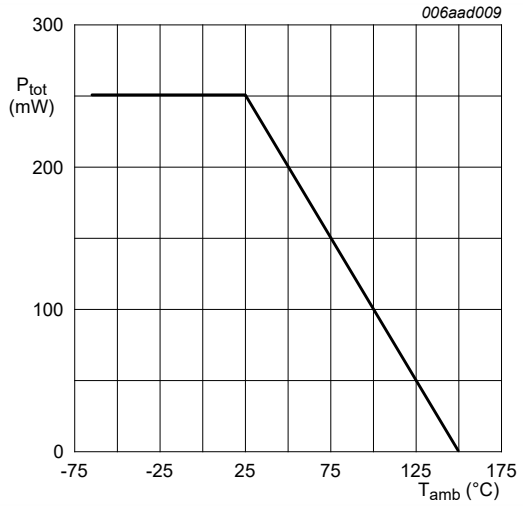

FR4 PCB, standard footprint

Fig. 1. Power derating curve for DFN1006B-3 (SOT883B)

9. Thermal characteristics

Table 6. Thermal characteristics

Symbol	Parameter	Conditions		Min	Typ	Max	Unit
$R_{th(j-a)}$	thermal resistance from junction to ambient		[1]	-	-	500	K/W

[1] Device mounted on an FR4 PCB, single-sided copper, tin-plated and standard footprint.

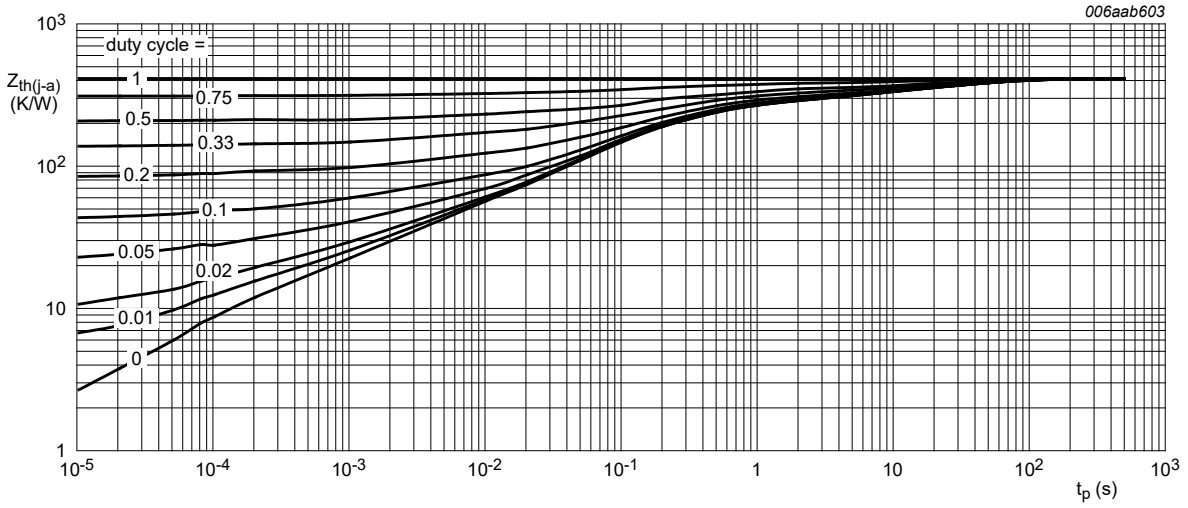

FR4 PCB, standard footprint

Fig. 2. Transient thermal impedance from junction to ambient as a function of pulse duration; typical values

All information provided in this document is subject to legal disclaimers.

© Nexperia B.V. 2024. All rights reserved

10. Characteristics

Table 7. Characteristics

Symbol	Parameter	Conditions		Min	Typ	Max	Unit
$V_{(BR)CBO}$	collector-base breakdown voltage	I_C = -100 μA; I_E = 0 A; T_{amb} = 25 °C		-50	-	-	V
$V_{(BR)CEO}$	collector-emitter breakdown voltage	I_C = -2 mA; I_B = 0 A; T_{amb} = 25 °C		-50	-	-	V
I_{CBO}	collector-base cut-off current	V_{CB} = -50 V; I_E = 0 A; T_{amb} = 25 °C		-	-	-100	nA
I_{CEO}	collector-emitter cut-off current	V_{CE} = -30 V; I_B = 0 A; T_{amb} = 25 °C		-	-	-1	μA
		V_{CE} = -30 V; I_B = 0 A; T_j = 150 °C		-	-	-5	μA
I_{EBO}	emitter-base cut-off current	V_{EB} = -5 V; I_C = 0 A; T_{amb} = 25 °C		-	-	-400	μA
h_{FE}	DC current gain	V_{CE} = -5 V; I_C = -5 mA; T_{amb} = 25 °C		30	-	-	
V_{CEsat}	collector-emitter saturation voltage	I_C = -10 mA; I_B = -0.5 mA; T_{amb} = 25 °C		-	-	-150	mV
$V_{I(off)}$	off-state input voltage	V_{CE} = -5 V; I_C = 100 μA; T_{amb} = 25 °C		-	-1.1	-0.8	V
$V_{I(on)}$	on-state input voltage	V_{CE} = -0.3 V; I_C = -10 mA; T_{amb} = 25 °C		-2.5	-1.8	-	V
R1	bias resistor 1 (input)	T_{amb} = 25 °C		7	10	13	kΩ
R2/R1	bias resistor ratio			0.8	1	1.2	
C_c	collector capacitance	V_{CB} = -10 V; I_E = 0 A; i_e = 0 A; f = 1 MHz; T_{amb} = 25 °C		-	-	3	pF
f_T	transition frequency	V_{CE} = -5 V; I_C = -10 mA; f = 100 MHz; T_{amb} = 25 °C	[1]	-	180	-	MHz

[1] Characteristics of built-in transistor.

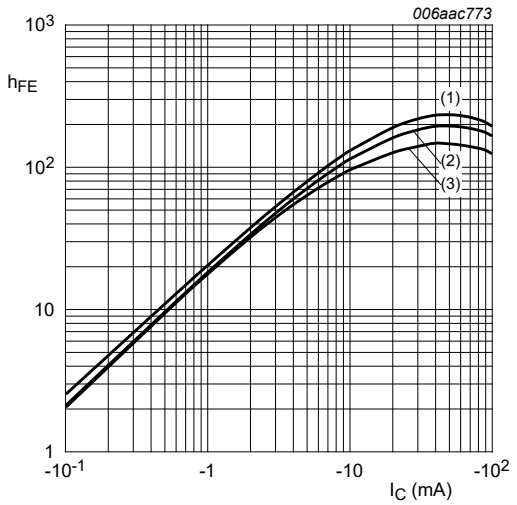

V_{CE} = -5 V
(1) T_{amb} = 100 °C
(2) T_{amb} = 25 °C
(3) T_{amb} = -40 °C

Fig. 3. DC current gain as a function of collector current; typical values

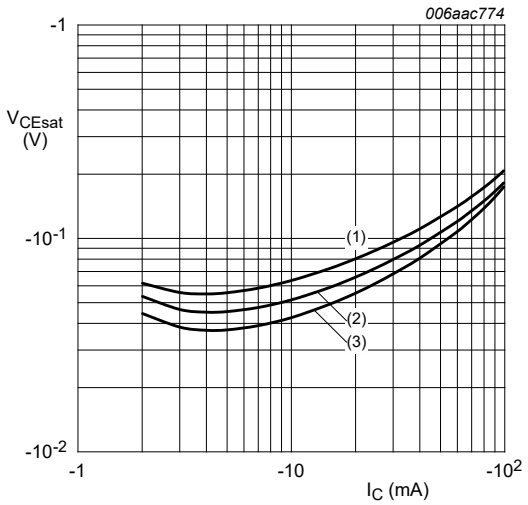

I_C/I_B = 20
(1) T_{amb} = 100 °C
(2) T_{amb} = 25 °C
(3) T_{amb} = -40 °C

Fig. 4. Collector-emitter saturation voltage as a function of collector current; typical values

All information provided in this document is subject to legal disclaimers.

© Nexperia B.V. 2024. All rights reserved

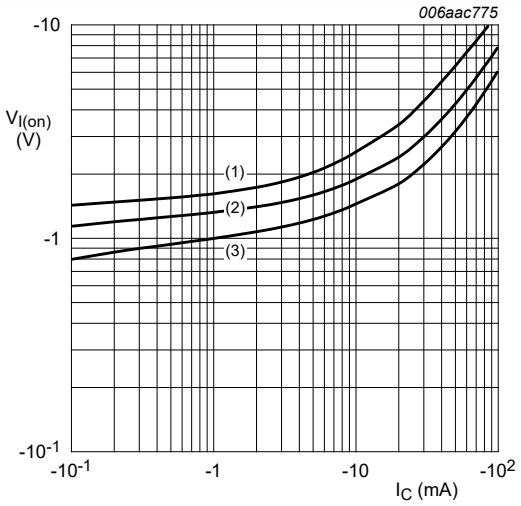

V_{CE} = -0.3 V
(1) T_{amb} = -40 °C
(2) T_{amb} = 25 °C
(3) T_{amb} = 100 °C

Fig. 5. On-state input voltage as a function of collector current; typical values

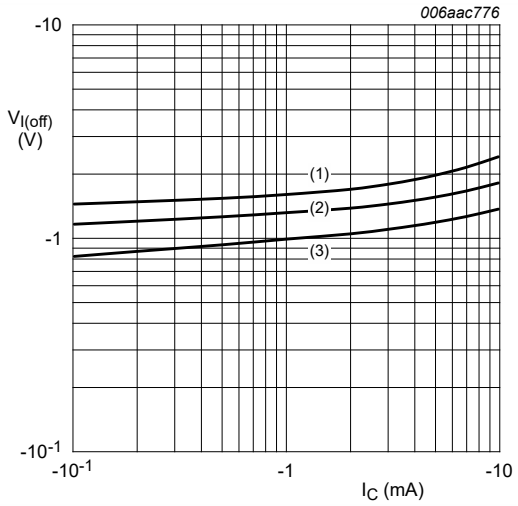

V_{CE} = -5 V
(1) T_{amb} = -40 °C
(2) T_{amb} = 25 °C
(3) T_{amb} = 100 °C

Fig. 6. Off-state input voltage as a function of collector current; typical values

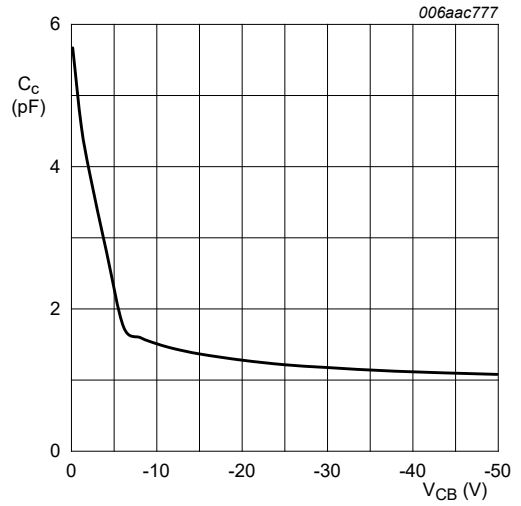

f = 1 MHz; T_{amb} = 25 °C

Fig. 7. Collector capacitance as a function of collector-base voltage; typical values

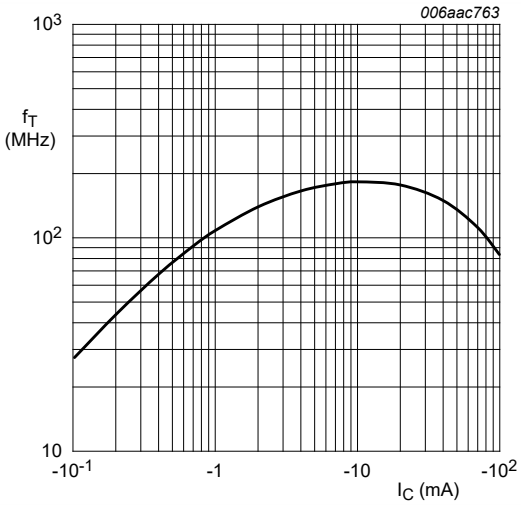

Fig. 8. Transition frequency as a function of collector current; typical values of built-in transistor

All information provided in this document is subject to legal disclaimers.

© Nexperia B.V. 2024. All rights reserved

11. Test information

Quality information

This product has been qualified in accordance with the Automotive Electronics Council (AEC) standard *Q101 - Stress test qualification for discrete semiconductors*, and is suitable for use in automotive applications.

Resistor calculation

- Calculation of bias resistor 1 (R1)

$$R_1 = \frac{V(I_2) - V(I_1)}{I_2 - I_1}$$

- Calculation of bias resistor ratio (R2/R1)

$$\frac{R2}{R1} = \frac{V(I_3)}{R1 \cdot I_3} - 1$$

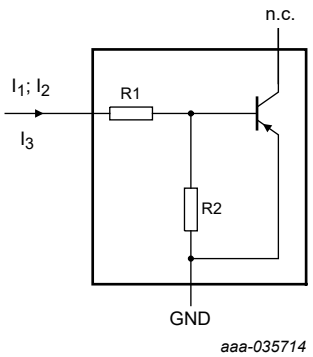

Fig. 9. PNP transistor: Resistor test circuit

Resistor test conditions

Table 8. Resistor test conditions

Type number	R1 (kΩ)	R2 (kΩ)	Test conditions		
			I_1	I_2	I_3
PDTA114EMB	10	10	-350 μA	-450 μA	400 μA

All information provided in this document is subject to legal disclaimers.

© Nexperia B.V. 2024. All rights reserved

12. Package outline

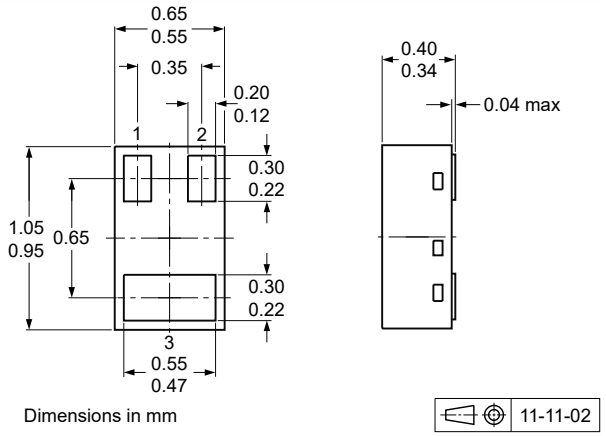

Fig. 10. Package outline DFN1006B-3 (SOT883B)

All information provided in this document is subject to legal disclaimers.

© Nexperia B.V. 2024. All rights reserved

13. Soldering

Footprint information for reflow soldering of DFN1006B-3 (SOT883B) package **SOT883B**

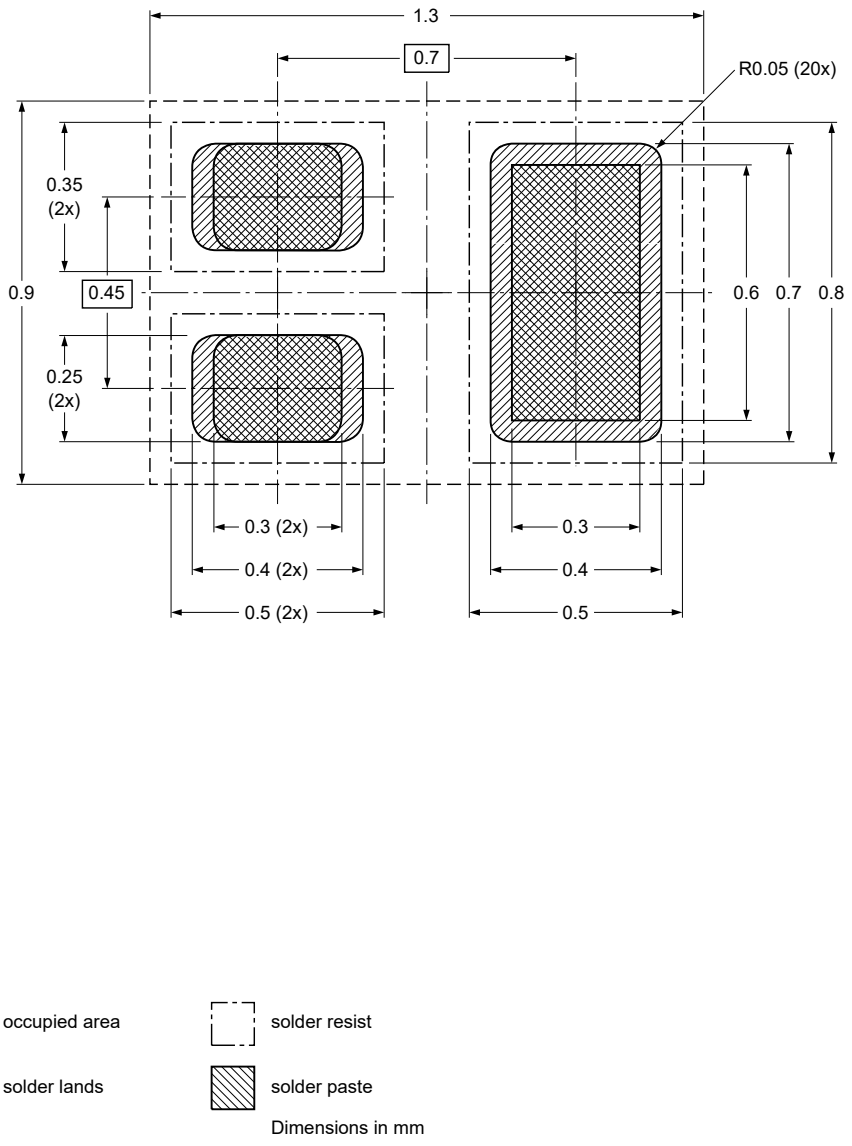

Issue date ~~13-07-02~~ 20-02-25

sot883b_fr

Fig. 11. Reflow soldering footprint for DFN1006B-3 (SOT883B)

All information provided in this document is subject to legal disclaimers.

© Nexperia B.V. 2024. All rights reserved

14. Revision history

Table 9. Revision history

Data sheet ID	Release date	Data sheet status	Change notice	Supersedes
PDTA114EMB v.3	20240219	Product data sheet	-	PDTA114EMB v.2
Modifications:	• Pinning: Graphic symbol adjusted			
PDTA114EMB v.2	20230207	Product data sheet	-	PDTA114EMB v.1
PDTA114EMB v.1	20120515	Product data sheet	-	-

All information provided in this document is subject to legal disclaimers.

© Nexperia B.V. 2024. All rights reserved

15. Legal information

Data sheet status

Document status [1][2]	Product status [3]	Definition
Objective [short] data sheet	Development	This document contains data from the objective specification for product development.
Preliminary [short] data sheet	Qualification	This document contains data from the preliminary specification.
Product [short] data sheet	Production	This document contains the product specification.

[1] Please consult the most recently issued document before initiating or completing a design.
[2] The term 'short data sheet' is explained in section "Definitions".
[3] The product status of device(s) described in this document may have changed since this document was published and may differ in case of multiple devices. The latest product status information is available on the internet at https://www.nexperia.com.

Definitions

Draft — The document is a draft version only. The content is still under internal review and subject to formal approval, which may result in modifications or additions. Nexperia does not give any representations or warranties as to the accuracy or completeness of information included herein and shall have no liability for the consequences of use of such information.

Short data sheet — A short data sheet is an extract from a full data sheet with the same product type number(s) and title. A short data sheet is intended for quick reference only and should not be relied upon to contain detailed and full information. For detailed and full information see the relevant full data sheet, which is available on request via the local Nexperia sales office. In case of any inconsistency or conflict with the short data sheet, the full data sheet shall prevail.

Product specification — The information and data provided in a Product data sheet shall define the specification of the product as agreed between Nexperia and its customer, unless Nexperia and customer have explicitly agreed otherwise in writing. In no event however, shall an agreement be valid in which the Nexperia product is deemed to offer functions and qualities beyond those described in the Product data sheet.

Disclaimers

Limited warranty and liability — Information in this document is believed to be accurate and reliable. However, Nexperia does not give any representations or warranties, expressed or implied, as to the accuracy or completeness of such information and shall have no liability for the consequences of use of such information. Nexperia takes no responsibility for the content in this document if provided by an information source outside of Nexperia.

In no event shall Nexperia be liable for any indirect, incidental, punitive, special or consequential damages (including - without limitation - lost profits, lost savings, business interruption, costs related to the removal or replacement of any products or rework charges) whether or not such damages are based on tort (including negligence), warranty, breach of contract or any other legal theory.

Notwithstanding any damages that customer might incur for any reason whatsoever, Nexperia's aggregate and cumulative liability towards customer for the products described herein shall be limited in accordance with the Terms and conditions of commercial sale of Nexperia.

Right to make changes — Nexperia reserves the right to make changes to information published in this document, including without limitation specifications and product descriptions, at any time and without notice. This document supersedes and replaces all information supplied prior to the publication hereof.

Suitability for use in automotive applications — This Nexperia product has been qualified for use in automotive applications. Unless otherwise agreed in writing, the product is not designed, authorized or warranted to be suitable for use in life support, life-critical or safety-critical systems or equipment, nor in applications where failure or malfunction of an Nexperia product can reasonably be expected to result in personal injury, death or severe property or environmental damage. Nexperia and its suppliers accept no liability for inclusion and/or use of Nexperia products in such equipment or applications and therefore such inclusion and/or use is at the customer's own risk.

Quick reference data — The Quick reference data is an extract of the product data given in the Limiting values and Characteristics sections of this document, and as such is not complete, exhaustive or legally binding.

Applications — Applications that are described herein for any of these products are for illustrative purposes only. Nexperia makes no representation or warranty that such applications will be suitable for the specified use without further testing or modification.

Customers are responsible for the design and operation of their applications and products using Nexperia products, and Nexperia accepts no liability for any assistance with applications or customer product design. It is customer's sole responsibility to determine whether the Nexperia product is suitable and fit for the customer's applications and products planned, as well as for the planned application and use of customer's third party customer(s). Customers should provide appropriate design and operating safeguards to minimize the risks associated with their applications and products.

Nexperia does not accept any liability related to any default, damage, costs or problem which is based on any weakness or default in the customer's applications or products, or the application or use by customer's third party customer(s). Customer is responsible for doing all necessary testing for the customer's applications and products using Nexperia products in order to avoid a default of the applications and the products or of the application or use by customer's third party customer(s). Nexperia does not accept any liability in this respect.

Limiting values — Stress above one or more limiting values (as defined in the Absolute Maximum Ratings System of IEC 60134) will cause permanent damage to the device. Limiting values are stress ratings only and (proper) operation of the device at these or any other conditions above those given in the Recommended operating conditions section (if present) or the Characteristics sections of this document is not warranted. Constant or repeated exposure to limiting values will permanently and irreversibly affect the quality and reliability of the device.

Terms and conditions of commercial sale — Nexperia products are sold subject to the general terms and conditions of commercial sale, as published at http://www.nexperia.com/profile/terms, unless otherwise agreed in a valid written individual agreement. In case an individual agreement is concluded only the terms and conditions of the respective agreement shall apply. Nexperia hereby expressly objects to applying the customer's general terms and conditions with regard to the purchase of Nexperia products by customer.

No offer to sell or license — Nothing in this document may be interpreted or construed as an offer to sell products that is open for acceptance or the grant, conveyance or implication of any license under any copyrights, patents or other industrial or intellectual property rights.

Export control — This document as well as the item(s) described herein may be subject to export control regulations. Export might require a prior authorization from competent authorities.

Translations — A non-English (translated) version of a document is for reference only. The English version shall prevail in case of any discrepancy between the translated and English versions.

Trademarks

Notice: All referenced brands, product names, service names and trademarks are the property of their respective owners.

All information provided in this document is subject to legal disclaimers.

© Nexperia B.V. 2024. All rights reserved

Contents

1. General description....1
2. Features and benefits....1
3. Applications....1
4. Quick reference data....1
5. Pinning information....2
6. Ordering information....2
7. Marking....2
8. Limiting values....2
9. Thermal characteristics....3
10. Characteristics....4
11. Test information....6
12. Package outline....7
13. Soldering....8
14. Revision history....9
15. Legal information....10

© Nexperia B.V. 2024. All rights reserved

For more information, please visit: http://www.nexperia.com
For sales office addresses, please send an email to: salesaddresses@nexperia.com
Date of release: 19 February 2024