Volume 4C: **Circuit Protection**
Bussmann series solutions

BUSSMANN
SERIES

EATON
Powering Business Worldwide

Don't miss a sale or an opportunity to upgrade your fuse protection

Three tiers offer distinct levels of circuit protection

1. **Ultimate** - Unique element designs deliver a powerful combination of operating characteristics in one fuse — fast short-circuit protection, current limitation, and time-delay with up to 300 kA interrupting ratings.
2. **Advanced** - Choose between fast-acting, short-circuit, current limiting protection or time-delay energy efficient, current limiting protection based on the application with 200 kA interrupting ratings.
3. **Basic** - Basic single-element protection for service, feeder and branch circuit applications with up to 100 kA interrupting ratings.

The arrows below show you the way

CUBEFuse™ protection

For finger-safe protection in a small footprint up to 600 V and 100 A, upgrade to the time-delay or fast-acting CUBEFuse. Amp rating rejection feature helps prevent overfusing in the CUBEFuse holder (page 1-11) or CCP2-CF UL 98 disconnect switch (page 11-6).

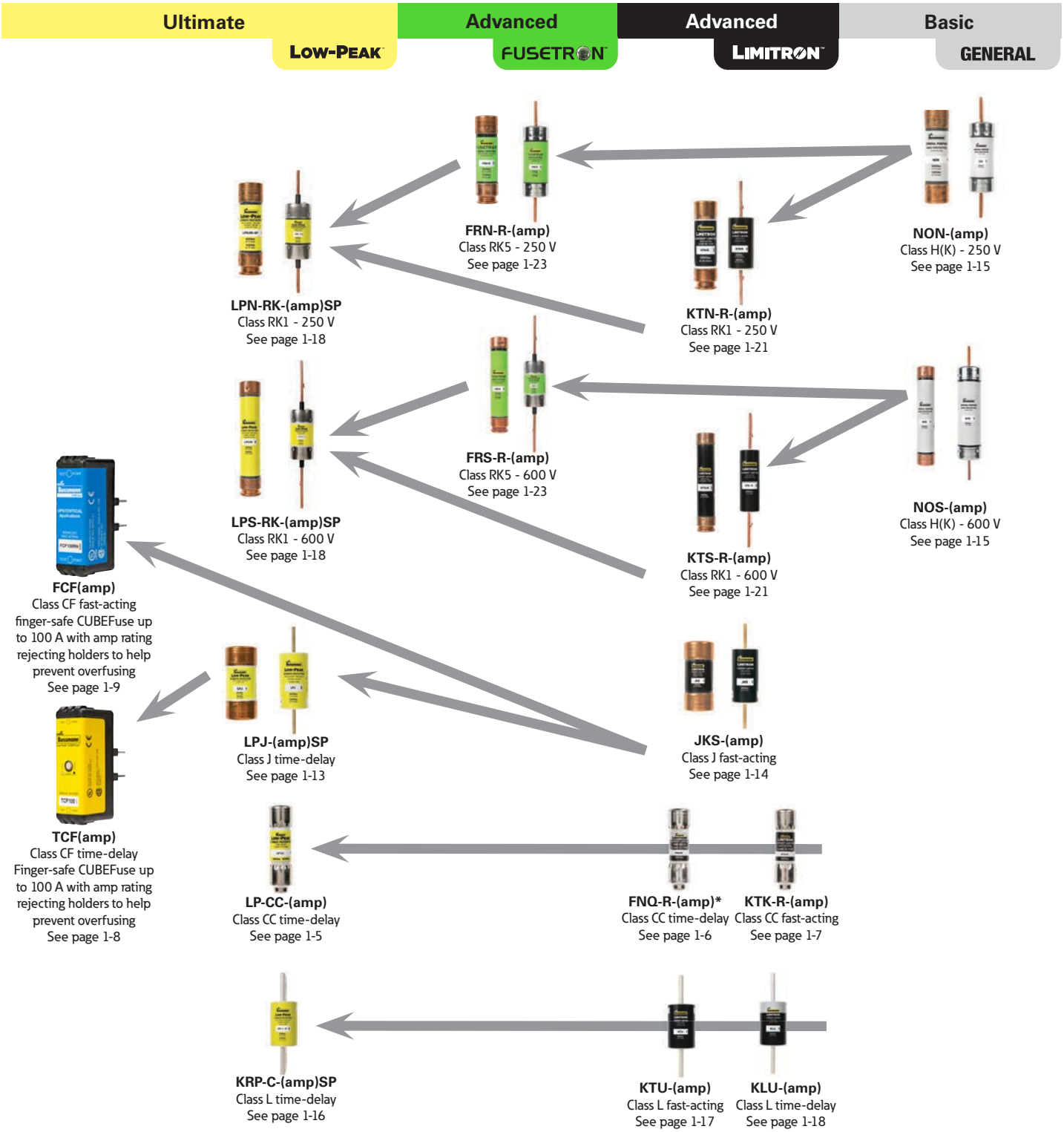

* FNQ-R fuses are suggested on primary of control transformers - do NOT upgrade to LP-CC.

The power of space

From the revolutionary Bussmann™ series CUBEFuse to its unique fuse holder or Compact Circuit Protector, we're continually innovating to give you products that help you go big, by going small.

Contents

Description	Catalog section
Selecting fused circuit protection	Introduction
Low voltage branch circuit fuses	1
Low voltage supplemental fuses and limiters	2
Electronic, PCB and small dimension fuses	3
High speed fuses	4
IEC and British Standard fuses	5
Photovoltaic fuses, holders and blocks	6
Medium voltage fuses	7
Fuse blocks and holders	8
Power distribution and terminal blocks	9
Connector products	10
Disconnect switches	11
Quik-Spec™ electrical gear	12
Surge protective devices	13
Telecom protection products	14
Accessories	15
Fuse sizing for 600 V building electrical systems	16
Selective coordination	
Low voltage, branch circuit fuse types and classes	
Glossary of common electrical terms	
Electrical formulas	
Fuse and fuse block cross reference	
Catalog number index	
Low-Peak™ Upgrade program and fuse inventory consolidation	Inside back cover

Bussmann series circuit protection solutions comply with major industrial standards and agency requirements such as: BS, IEC, DIN, UL, NEMA, CSA, CE, C-UL, etc. and are manufactured at facilities that are ISO 9000 certified.

This catalog is intended to present product data and provide technical information that will help the end user with design application. Eaton reserves the right, without notice, to change design or construction or any products and to discontinue or limit distribution of any products. Eaton also reserves the right to change or update, without notice, any technical information contained in this catalog. Once a product has been selected, it should be tested by the user in all possible applications. Further, Eaton takes no responsibility for errors or omissions contained in this catalog, or for misapplication of any Eaton product. Extensive product information is available in the Eaton product data sheets available on line at Eaton.com/bussmannseries.

©2018 Eaton

Selecting fused circuit protection

The following fuse selection tables are based on the 2017 NEC and provide fuse recommendations for the listed applications.

These are only suggestions. Final fuse selection should be performed by qualified personnel able to fully assess an application's circuit protection requirements.

If you need assistance in selecting a fuse, contact the Eaton Application Engineering team Monday through Friday, 7:00 a.m. — 5:00 p.m. Central time.

Application Engineering can be reached via phone (toll-free 855-287-7626) and email (FuseTech@Eaton.com).

To locate the recommended fuse product pages, use the index starting on page 16-4.

Ballasts

Location	Type	Notes	Fuse recommendation	Fuse holder recommendation
Indoor	Fluorescent	Consult fixture manufacturer for size and type	GLR, GMF, GRF	HLR
			GLQ, GMQ	HLQ
	All other (mercury, sodium, etc.)	Consult fixture manufacturer for size and type	BAF, KTK, FNM, FNQ	HPF, HPS
			KTK-R, FNQ-R, LP-CC	HPS-RR, HPF-RR
			BBS	HPS-L, HPF-L
			SC up to 15 amps	HPF-EE, HPS-EE
			SC 20 amp	HPF-JJ, HPS-JJ
			SC 25-30 amps	HPF-FF, HPS-FF
Outdoor	Mercury, sodium, etc.	Consult fixture manufacturer for size and type.	BAF, KTK, FNM, FNQ	HEB, HEX, HPC-D
			KTK-R, FNQ-R, LP-CC	HEY, HEZ

Capacitors (NEC 460)

Protected by	Sizing	Fuse/volt recommendation
Time-delay fuses	150% to 175% of Full Load Current (FLC)	Up to 250 V: LPN-RK_SP, FRN-R Up to 600 V: LPS-RK_SP, FRS-R, LPJ_SP, LP-CC, FNQ-R, TCF
Non time-delay fuses	250% to 300% of Full Load Current (FLC)	Up to 250 V: KTN-R Up to 300 V: JJN Up to 600 V: KTS-R, JKS, KTK-R, JJS, FCF_RN
On loadside of motor running overcurrent device	Protection recommended as shown, but not required	—

Electric heat (NEC 424)

Heating type	Sizing	Fuse/volt recommendation
Space heating	125% or next size larger but in no case larger than 60 amps for each subdivided load	Up to 250 V: LPN-RK_SP, FRN-R, NON Up to 300 V: JJN Up to 480 V; SC 25 to SC 60 Up to 600 V: LPS-RK_SP, FRS-R, NOS, JJS, LPJ_SP, LP-CC, FNQ-R, JKS, KTK-R, TCF, SC 1/2 to SC 20, FCF_RN
Boilers (ASME rated and stamped vessel)	125% or next size larger but in no case larger than 150 amps for each subdivided load	

Mains, feeders, branches (NEC 430)

Circuit type	Circuit loads	Sizing	Fuse/volt recommendation
Feeder circuits ≤ 600 A	No motor load	100% of non-continuous load plus 125% of continuous load	Up to 250 V: LPN-RK_SP, FRN-R Up to 300V: JJN Up to 600 V: LPS-RK_SP, FRS-R, JJS, LPJ_SP, LP-CC, JKS, KTK-R
	Combination motor and other loads	150% of the FLA of largest motor (if there are two or more motors of same size, one is considered to be the largest) plus the sum of all the FLA for all other motors plus 100% of non-continuous, non-motor load plus 125% of continuous, non-motor load. A maximum of 175% (or the next standard size if 175% does not correspond to a standard size) is allowed for all but wound rotor and all DC motors.	Up to 250 V: LPN-RK_SP, FRN-R Up to 600 V: LPS-RK_SP, FRS-R, LPJ- SP, LP-CC
	Motor loads	150% of the FLA of largest motor (if there are two or more motors of same size, one is considered to be the largest) plus the sum of all the FLA for all other motors. A maximum of 175% (or the next standard size if 175% does not correspond to a standard size) is allowed for all but wound rotor and all DC motors.	
Main, branch and feeder circuits (601-6000 A)	—	150% to 225% of full load current of largest motor plus 100% of full load current of all other motors plus 125% of continuous non-motor load plus 100% of non-continuous non-motor load	Up to 600 V: KRP-C_SP

Motor loads (NEC 430)

Circuit voltage	Fuse type	Fuse sized for	Sizing	Fuse/volt recommendation
600 V and less	Time-delay fuses	Backup overload with motor starter and short-circuit protection	125% of motor FLA or next size larger	Up to 250 V: FRN-R Up to 600 V: FRS-R
			130% of motor FLA or next size larger	Up to 250 V: LPN-RK_SP Up to 600 V: LPS-RK_SP
		Short-circuit only	175% of motor FLA or next size larger. (If 175% does not correspond to a standard size). If this will not allow motor to start, due to higher than normal inrush currents or longer than normal acceleration times (5 seconds or greater), fuse may be sized up to 225% or next size smaller. **NOTE**: 150% for wound rotor and all DC motors.	Up to 250 V: LPN-RK_SP, FRN-R Up to 600 V: LPS-RK_SP, FRS-R, LPJ_SP, TCF
	Non-time delay and all Class CC fuses	Short-circuit only	Maximum of 300% of motor FLA or next size larger (if 300% does not correspond to a standard size). If this will not allow motor to start due to higher than normal inrush currents or longer than normal acceleration times (5 seconds or greater), fuses through 600 amps may be sized up to 400% or next size smaller. **Note**: 150% for wound rotor and all DC motors.	Up to 250 V: KTN-R Up to 300 V: JJN Up to 600 V: KTS-R, JJS, LP-CC, JKS, KTK-R, FCF_RN
Above 600 V	—	—	Compare the minimum melting time-current characteristics of the fuses with the time-current characteristics of the overload relay curve. The size fuse which is selected should be such that short-circuit protection is provided by the fuse and overload protection is provided by the controller overload relays.	Up to 2400 V: JCH, JCK, JCK-A, JCK-B, 2ACLS, 2BCLS, 2CLS, 2HCLS Up to 4800 V: JCL, JCL-A, JCL-B, 5ACLS, 5BCLS, 5CLS, 5HCLS Up to 7200 V: 7BCLS, 7.2WKMSJ, 8ACLS, 8CLS

Solenoids (coils)

Fuse type	Sizing	Fuse/volt recommendation
Branch circuit	Size at 125% or next size smaller	Up to 250 V: LPN-RK_SP, FRN-R (best) Up to 600 V: LPS-RK_SP, FRS-R, LPJ_SP, LP-CC, FNQ-R, TCF
Supplemental	Size at 125% or next size larger	Up to 32 V: MDL 9-30 A, FNM 20-30 A Up to 125 V: MDA 25-30 A, FNM 12-15 A Up to 250 V: MDL 1/16-8 A, MDA 2/10-20 A, FNM 1/10-10 A, MDQ 1/100-7 A Up to 500 V: FNQ 1/10-30 A

Transformers 600 V nominal or less (NEC 450.3)

Protection type	Thermal overload protection	Transformer impedance	Rated current	Optimum protection*	NEC maximums	Fuse/volt recommendation
Primary only (Note: components on the secondary still need overcurrent protection)	—	—	Primary < 2 amps	125% or next size larger	300% or next size smaller (see NEC 430.72(C) for control circuit transformer maximum of 500%)	Up to 250 V: LPN-RK_SP, FRN-R Up to 600 V: KRP-C_SP, LPJ_SP, LPS-RK_SP, FNQ-R, FRS-R, TCF
			Primary ≥ 2 amps but < 9 amps	125% or next size larger	167% or next size smaller	
			Primary ≥ 9 amps	125% or next size larger	125% or next size larger**	
Primary and secondary	Without	—	Secondary < 9 amps (see **A**)	Primary and secondary fuses at 125% of primary and secondary FLA or next size larger	**% of primary FLA (or next FLA size smaller)** **A** = 250% **B** = 250% **C** = 600% **D** = 600% **E** = 400% **F** = 400% **% of secondary FLA** **A** = 167% or next size smaller **B** = 125% or next size larger** **C** = 167% or next size smaller **D** = 125% or next size larger** **E** = 167% or next size smaller **F** = 125% or next size larger**	
			Secondary ≥ 9 amps (see **B**)			
	With	≤ 6%	Secondary < 9 amps (see **C**)			
			Secondary ≥ 9 amps (see **D**)			
		> 6% but < 10%	Secondary < 9 amps (see **E**)			
			Secondary ≥ 9 amps (see **F**)			

* When sizing the primary fuse for optimum protection, verify the inrush current with the transformer manufacturer and review fuse time-current characteristics.
**When 125% of FLA corresponds to a standard rating, the next larger size is not permitted.

Transformers over 600 V nominal (NEC 450.3)

Supervised installations

Protection for	Transformer impedance	Primary Sizing	Secondary volts	Secondary sizing	Fuse/volt recommendation
Primary only	N/A	Code maximum of 250% or next standard size if 250% does not correspond to a standard rating Note: Components on the secondary still need overcurrent protection	N/A	N/A	Up to 250 V: LPN-RK_SP, FRN-R Up to 600 V: LPS-RK_SP, LPJ-_SP, KRP-C_SP, FRS-R, FNQ-R, TCF Up to 2.475 kV: 2NCLPT, 2CLPT Up to 2.75 kV: 2CLE, 2HLE Up to 2750/5500 V: JCW Up to 5.5 kV: 5HLE, 5CLE, 5HCL, 5BHCL, 5BHLE, 5AHLE, JCY, MV05, 5.5 ABWNA, 5.5 AMWNA, 5.5 FFN 7 Up to 7.2 kV:.2 AMWNA, 7.2 TDLSJ, 7.2 TFLSJ Up to 8.3 kV: 8HLE, 8CLE, 8BHLE, 8AHLE, 8CLPT, 8NCLPT, 8HCL, 8.25 FFN Up to 15.5 kV: 15CLPT, 15NCLPT, 15CLE, 15HLE, 15BHLE, 15LHLE, 15HCL, 15BHCL, MV155, 15.5 CAVH Up to 17.5 kV: 17.5 CAV, 17.5 TDM Up to 24 kV: 24 TDM, 24 TFM, 24 FFM Up to 36 kV: 36 CAV, 36 TDQ, 36 TFQ Up to 38 kV: 38CLPT, 38 CAV
Primary and secondary	≤ 6%	At code maximum of 300%	> 600 V	At code maximum of 250%	
			≤ 600 V	At code maximum of 250%	
	> 6% but < 10%	At code maximum of 300%	> 600 V	At code maximum of 225%	
			≤ 600 V	At code maximum of 250%	

Unsupervised installations

Transformer impedance	Primary Sizing	Secondary volts	Secondary sizing	Fuse/volts recommendation
≤ 6%	At code maximum of 300% or next standard size if 300% does not correspond to a standard rating	> 600 V	At code maximum of 250% or next standard size if 250% does not correspond to a standard rating	Up to 250 V: LPN-RK_SP, FRN-R Up to 600 V: LPS-RK_SP, LPJ-_SP, KRP-C_SP, FRS-R, FNQ-R, TCF Up to 2475 V: 2NCLPT, 2CLPT Up to 2.75 kV: 2CLE, 2HLE Up to 2750/5500 V: JCW Up to 5.5 kV: 5HLE, 5CLE, 5HCL, 5BHCL, 5BHLE, 5AHLE, JCY, MV05, 5.5 ABWNA, 5.5 AMWNA, 5.5 FFN Up to 7.2 kV: 7.2 AMWNA, 7.2 TDLSJ, 7.2 TFLSJ Up to 8.3 kV: 8HLE, 8CLE, 8BHLE, 8AHLE, 8CLPT, 8NCLPT, 8HCL, 8.25 FFN Up to 15.5 kV: 15CLPT, 15NCLPT, 15CLE, 15HLE, 15BHLE, 15LHLE, 15HCL, 15BHCL, MV155, 15.5 CAVH Up to 17.5 kV: 17.5 CAV, 17.5 TDM Up to 24 kV: 24 TDM, 24 TFM, 24 FFM Up to 36 kV: 36 CAV, 36 TDQ, 36 TFQ Up to 38 kV: 38CLPT, 38 CAV
		≤ 600 V	At code maximum of 125% or next standard size if 125% does not correspond to a standard rating	
> 6% but < 10%	At code maximum of 300% or next standard size if 300% does not correspond to a standard rating	> 600 V	At code maximum of 225% or next standard size if 225% does not correspond to a standard rating	
		≤ 600 V	At code maximum of 125% or next standard size if 125% does not correspond to a standard rating	

Solid state devices (diodes, SCRs, triacs, transistors)

Protection type	Sizing	Fuse/volts recommendation
Short-circuit only	F, S, K, and 170M fuse families sized up to several sizes larger than full load RMS or DC rating of device	Up to 130 V: FWA Up to 250 V: FWX Up to 500 V: FWH Up to 600 V: FWC, KAC, KBC Up to 700 V: FWP, 170M_, SPP Up to 1000 V: FWJ, 170M_, SPJ

Do you know about the new 2017 NEC® SCCR requirements?

Finding out is easy.

Eaton's Bussmann™ series handbook *Code changes affecting Short-Circuit Current Ratings based on the 2017 NEC* will help you:

Know why SCCR is important.

Understand hazards associated with insufficient SCCR.

Know what specific NEC chapters, articles, parts and sections are involved.

Comply with Code requirements for marking and documenting SCCR.

If you're designing, installing or inspecting equipment, download your copy at **Eaton.com/nec2017sccr**.

Or, check out our comprehensive SCCR resources at **Eaton.com/bussmannseries/SCCR**.

EATON
Powering Business Worldwide

Follow us on social media to get the latest product and support information.

The power of space

The revolutionary Bussmann™ series Low-Peak™ CUBEFuse™ delivers the smallest footprint compared to any Class J or RK fuse solution — requiring up to 70% less space when combined with its unique fuse holder.

Contents

Description			Section page
Fuse holder and block selection guide			**2**
Fuse reducers			
Branch circuit fuse dimensions			**3-4**
Fuse class	**Catalog symbol**	**Volts**	
CC	LP-CC	600 V	5
	FNQ-R		6
	KTK-R		7
CF	TCF	600 V	8-9
	FCF		10
	WCF	690 V	11
	TCFH_ Class CF holders	600 V	12-17
G	SC	600/480 V	18
J	LPJ-_SP	600 V	19
	LPJ-_SPI indicator		
	JKS		20
H(K)	NON	250 V	21
	NOS	600 V	
L	KRP-C_SP	600 V	22
	KRP-CL (225 to 600 A)		23
	KTU		
	KLU		24
RK1	LPN-RK_SP	250 V	24-26
	LPN-RK_SPI indicator		
	LPS-RK_SP	600 V	
	LPS-RK_SPI indicator		
	KTN-R	250 V	27-28
	KTS-R	600 V	
RK5	FRN-R	250 V	29-30
	FRN-R_ID indicator		
	FRS-R	600 V	
	FRS-R_ID indicator		
T	JJN	300 V	31-32
	JJS	600 V	
Plug fuses	SL, TL and W	125 V	33
	P, S, T and TC		34
	MB Edison base circuit breakers		35
	SA fuse adapters		
	Box cover units		36

For conductor protection, see cable limiters in Section 2, page 3.

Fuse holder and block selection guide

Catalog pages for the blocks and holders are denoted parenthetically "()" next to their catalog symbol.

Fuse class	Catalog symbol	Blocks	DIN-Rail holders	Panel mount holders	In-line holders
CC	FNQ-R KTK-R LP-CC	BCM (8-6) 3743 (8-14) 4421 (8-14) 4515 (8-14)	CHCC (8-8) OPM-1038 (8-12) OPM-NG (8-13) CCP2-CC††† (11-2)	HPF-RR (8-43) HPS-RR (8-45) CCPLP††† (30 A) (11-32)	HEY (8-53) HEZ (8-52)
CF	FCF TCF WCF††	TCFH (1-13) TCFHNW (1-13) (Panel and DIN-Rail mount)	CCP2-CF††† (11-6) CCP2B††† (11-29)	—	—
G	SC	BG (8-15) G (8-15)	—	CCPLP††† (20 A) (11-32) HPG-EE (15 A) (8-44) HPS-EE (15 A) (8-45) HPS-FF (30 A) (8-45) HPS-JJ (20 A) (8-45)	HEC (30 A) (8-49) HEG (15 A) (8-49) HEH (20 A) (8-49) HEJ (60 A) (8-49)
H(K) 250 V	NON (250 V)	HM25_ (8-19) HM25060_MW* (8-24)	—	—	—
H(K) 600 V	NOS (600 V)	HM60_ (8-19) HM60030_MW* (8-24)	—	—	—
J	LPJ JKS	JM60_ (8-31) JM60_MW* (8-33) JP60030 (8-30)	CH_J (8-28) JT(N) (8-29)	—	—
L	KRP-C KRP-CL KLU KTU	51215** 51235**	—	—	—
RK1 250 V	LPN-RK KTN-R	RM25_ (8-21) RM25_MW* (8-26)	—	—	—
RK1 600 V	LPS-RK KTS-R	RM60_ (8-21) RM60_MW* (8-26)	—	—	—
RK5 250 V	FRN-R	RM25_ (8-21) RM25_MW* (8-26)	—	—	—
RK5 600 V	FRS-R	RM60_ (8-21) RM60_MW* (8-26)	—	—	—
T 300 V	JJN	T300 (8-35)	—	—	—
T 600 V	JJS	T600 (8-37)			
T up to 600 V	JJN/JJS	BH-0_, BH-1_, BH-3_† (8-39)			
Plug fuses	P, T, TC, TL, W Edison base	Box cover units (1-30)	—	—	—
	S, SL rejection base	SA adapters (1-29)	—	—	—

* Power distribution fuse blocks.
** Up to 800 A, contact customer satisfaction at 855-287-7626 for more information.
† Various blade bolt-on up to 700 A, see data sheets for limitations.
†† WCF (wind CUBEFuse) is rated to 690 V and is not a UL Listed Class CF fuse and can only be applied in the TCFHNW holder.
††† UL 98 Listed disconnect switch, available in 1-, 2- and 3-pole versions.

250 V Class R fuse reducers

Equipment fuse clip amps	Desired fuse (case) amp size	Catalog no. (pairs)
60	30	NO.263-R
100	30	NO.213-R
	60	NO.216-R
200	60	NO.226-R
	100	NO.2621-R
400	100	NO.2641-R
	200	NO.242-R
600	100	NO.2661-R
	200	NO.2662-R
	400	NO.2664-R*

* Single reducer only (pair not required).

600 V Class R fuse reducers

Equipment fuse clip amps	Desired fuse (case) amp size	Catalog no. (pairs)
60	30	NO.663-R
100	30	NO.216-R
	60	NO.616-R
200	60	NO.626-R
	100	NO.2621-R
400	100	NO.2641-R
	200	NO.642-R
600	100	NO.2661-R
	200	NO.2662-R
	400	NO.2664-R*

* Single reducer only (pair not required).

Branch circuit fuse dimensions

Class CC — in (mm)

LP-CC, FNQ-R, KTK-R and LP-CC

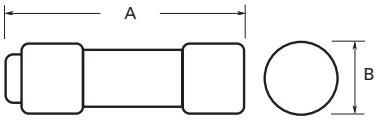

Amp range	A	B
Up to 30	1.5 (38)	0.41 (10)

Class CF — in (mm)

TCF, FCF and WCF

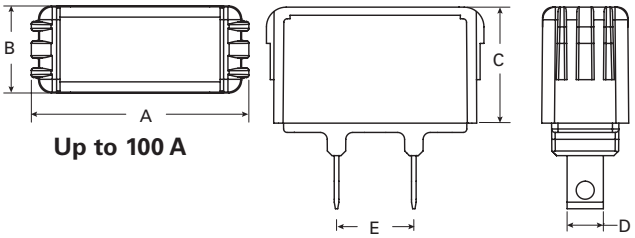

Up to 100 A

110 to 400 A

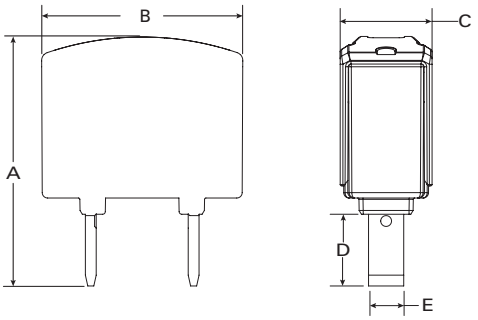

Fuse amps	A	B	C	D	E
1-15	1.88 (48)	0.75 (19)	1.0 (25)	0.23 (6)	0.67 (17)
17-1/2*				0.27 (7)	
20					
25-30				0.31 (8)	
35-40	2.13 (54)	1.0 (25)	1.13 (29)	0.36 (9)	
45-50				0.44 (11)	
60					
70	3.01 (76)		1.26 (32)	0.49 (12)	0.64 (16)
80-90					
100				0.57 (14)	
110	3.62 (92)	2.9 (74)	1.34 (34)	1.02 (26)	0.51 (13)
125					0.51 (13)
150					0.51 (13)
175					0.57 (14.5)
200					0.57 (14.5)
225					0.63 (16)
250	4.25 (108)	3.46 (88)	1.69 (43)	1.47 (36)	0.73 (18.5)
300					0.79 (20)
350					0.86 (21.5)
400					0.86 (21.5)

* Time-delay (TCF) only.

Class J — in (mm)

LPJ and JKS

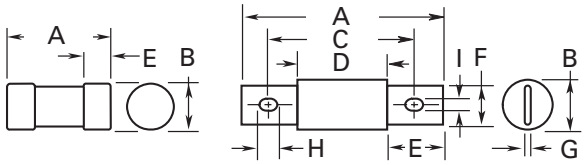

1 to 60A

70 to 600A

Amp range	A	B	C	D	E	F	G	H	I
1-30	2.25 (57)	0.81 (21)	—	—	0.5 (13)	—	—	—	—
35-60	2.38 (60)	1.06 (27)	—	—	0.63 (16)	—	—	—	—
70-100	4.63 (118)	1.13 (29)	3.63 (92)	2.63 (67)	1.0 (25)	0.75 (29)	0.13 (3)	0.41 (10)	0.28 (7)
110-200	5.75 (146)	1.63 (41)	4.38 (111)	3.0 (76)	1.38 (35)	1.13 (29)	0.19 (5)	0.38 (10)	0.28 (7)
225-400	7.12 (181)	2.11 (54)	5.25 (133)	3.26 (83)	1.87 (48)	1.62 (41)	0.25 (6)	0.56 (14)	0.4 (10)
450-600	8.0 (203)	2.6 (66)	6.0 (152)	3.31 (84)	2.12 (54)	2.0 (51)	0.53 (14)	0.72 (18)	0.53 (14)

Class RK1 and RK5 — in (mm)

FRN-R, KTN-R LPN-RK (250 V) and FRS-R, KTS-R LPS-RK (600 V)

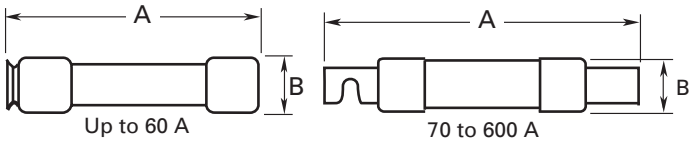

Up to 60 A

70 to 600 A

Basic dimensions are same as Class H, one-time (NON and NOS) fuses. **Note**: relating to dimensional compatibility these fuses can replace existing Class H, RK1 and RK5 fuses.

	250 V fuses		600 V fuses	
Amp range	**A**	**B**	**A**	**B**
Up to 30	2 (51)	0.56 (14)	5.0 (127)	0.81 (21)
35-60	3 (76)	0.81 (21)	5.5 (140)	1.06 (27)
RK5 FRN-R, FRS-R, — RK1 KTN-R, KTS-R				
70-100	5.88 (149)	1.06 (27)	7.88 (200)	1.34 (34)
110-200	7.13 (181)	1.56 (40)	9.63 (245)	1.84 (47)
225-400	8.63 (219)	2.38 (61)	11.63 (295)	2.59 (66)
450-600	10.38 (264)	2.88 (73)	13.38 (340)	3.13 (80)
RK1 LPN-RK, LPS-RK				
70-100	5.88 (149)	1.16 (30)	7.88 (200)	1.16 (30)
110-200	7.13 (181)	1.66 (42)	9.63 (245)	1.66 (42)
225-400	8.63 (219)	2.38 (61)	11.63 (295)	2.38 (61)
450-600	10.38 (264)	2.88 (73)	13.38 (340)	2.88 (73)

Class T — in (mm)

JJN (300 V) and JJS (600 V)

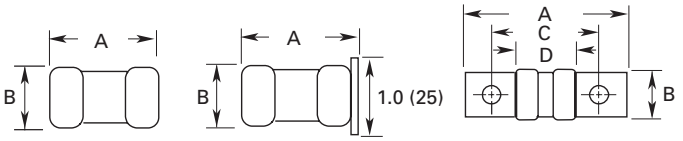

JJN up to 60 A
JJS up to 30 A

JJS 35 to 60 A

JJN 70 to 1200 A
JJS 70 to 800 A

300 V JJN				
Amp range	**A**	**B**	**C**	**D**
Up to 30	0.88 (22)	0.41 (10)	—	—
35-60	0.88 (22)	0.56 (14)	—	—
70-100	2.16 (55)	0.75 (19)	1.56 (40)	0.84 (21)
110-200	2.44 (62)	0.88 (22)	1.69 (43)	0.84 (21)
225-400	2.75 (70)	1.00 (25)	1.84 (47)	0.86 (22)
450-600	3.06 (78)	1.25 (32)	2.03 (52)	0.88 (22)
601-800	3.38 (86)	1.75 (45)	2.22 (56)	0.89 (23)
801-1200	4.00 (102)	2.00 (51)	2.53 (64)	1.08 (27)

600 V JJS				
Amp range	**A**	**B**	**C**	**D**
Up to 30	1.50 (38)	0.56 (14)	—	—
35-60	1.56 (40)	0.81 (21)	—	—
70-100	2.95 (75)	0.75 (19)	2.36 (60)	1.64 (42)
110-200	3.25 (83)	0.88 (22)	2.50 (64)	1.66 (42)
225-400	3.63 (92)	1.00 (25)	2.72 (69)	1.73 (44)
450-600	3.98 (101)	1.25 (32)	2.96 (75)	1.78 (45)
601-800	4.33 (110)	1.75 (45)	3.17 (81)	1.88 (48)

Branch circuit fuse dimensions

Class L — in (mm)

KLU, KRP-C_SP, KRP-CL, KTU

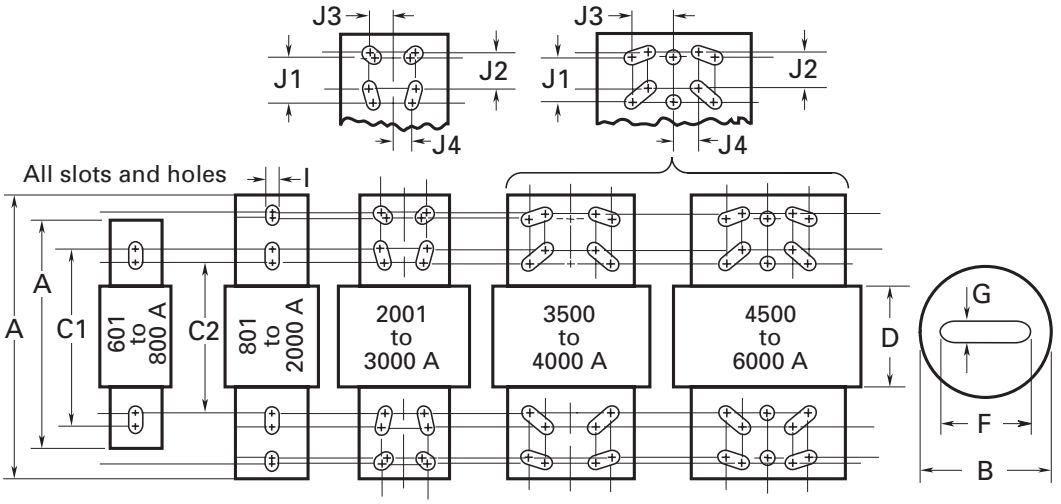

Amp range	A	B	C1	C2	D	F	G	I	J1	J2	J3	J4
601-800	8.63 (219)	2.4 (61)	6.75 (172)	5.75 (146)	3.75 (95)	2.00 (51)	0.38 (10)	0.63 (16)	—	—	—	—
801-1200	10.75 (273)	2.4 (61)	6.75 (172)	5.75 (146)	3.75 (95)	2.00 (51)	0.38 (10)	0.63 (16)	—	—		
1350-1600	10.75 (273)	3.0 (76)	6.75 (172)	5.75 (146)	3.75 (95)	2.38 (60)	0.44 (11)	0.63 (16)	—	—	—	—
1800-2000	10.75 (273)	3.5 (89)	6.75 (172)	5.75 (146)	3.75 (95)	2.75 (70)	0.5 (13)	0.63 (16)	—	—	—	—
2001-2500	10.75 (273)	4.8 (122)	6.75 (172)	5.75 (146)	3.75 (95)	3.50 (89)	0.75 (19)	0.63 (16)	1.75 (45)	1.38 (35)	0.88 (22)	0.81 (21)
3000	10.75 (273)	5.0 (127)	6.75 (172)	5.75 (146)	3.75 (95)	4.00 (102)	0.75 (19)	0.63 (16)	1.75 (45)	1.38 (35)	0.88 (22)	0.81 (21)
3500-4000	10.75 (273)	5.75 (146)	6.75 (172)	5.75 (146)	3.75 (95)	4.75 (121)	0.75 (19)	0.63 (16)	1.75 (45)	1.38 (35)	1.63 (41)	0.88 (22)
4500-5000	10.75 (273)	6.25 (159)	6.75 (172)	5.75 (146)	3.75 (95)	5.25 (133)	1.0 (25)	0.63 (16)	1.75 (45)	1.38 (35)	1.63 (41)	0.88 (22)
6000	10.75 (273)	7.13 (181)	6.75 (172)	5.75 (146)	3.75 (95)	5.75 (146)	1.0 (25)	0.63 (16)	1.75 (45)	1.38 (35)	1.63 (41)	0.88 (22)

Note: KRP-CL (225-600 A) fuses have same dimensions as 601-800 A case size KTU (200-600 A) have same dimensions, except tube 3" length x 2" diameter (76 x 51 mm); terminal 1-5/8" width x 1-1/4" thick (41 x 32 mm).

LP-CC Class CC Low-Peak™ time-delay, rejection-type fuses

Time-delay, current-limiting, rejection-type fuse — 12 seconds (minimum) at 200% rated amps. For dimensions, see page 1-3.

Ratings

- Volts
  - 600 Vac (or less)
  - 300 Vdc (1/2 to 2-8/10 A and 20-30 A)
  - 150 Vdc (3-15 A)
- Amps 1/2-30 A
- IR
  - 200 kA RMS Sym.
  - 20 kA DC

Agency information

- UL Listed Std 248-4, Class CC, Guide JDDZ, File E4273, CSA Certified, Class 1422-02, File 53787, RoHS compliant (20-30 A)*, CE

* Contact factory for RoHS compliance on other ratings.

Features

- Class CC rejection feature, with appropriate fuse block, prevents inserting lesser-rated supplementary fuses
- Time-delay coupled with Class CC current-limiting response provides close sizing on small motor and relay circuits, and maximum component short-circuit current rating protection
- 200 kA interrupting rating provides high ratings for control circuit locations
- Inventory consolidation of 13/32" x 1-1/2" supplemental fuses reduces SKU investment and minimizes potential for misapplying fuse
- Selective coordination ratio of 2:1 (within Low-Peak fuse family) prevents electrical shutdowns from extending beyond the failed circuit

Typical applications

- Branch circuit protection
- Specialized circuits
- Industrial controls and panels
- Isolated, in-line fuse holder

Catalog no. (amps)			
LP-CC-1/2	LP-CC-1-8 /10	LP-CC-4-1/2	LP-CC-10
LP-CC-6/10	LP-CC-2	LP-CC-5	LP-CC-12
LP-CC-8/10	LP-CC-2-1/4	LP-CC-5-6/10	LP-CC-15
LP-CC-1	LP-CC-2-1/2	LP-CC-6	LP-CC-20
LP-CC-1-1/8	LP-CC-2-8/10	LP-CC-6-1/4	LP-CC-25
LP-CC-1-1/4	LP-CC-3	LP-CC-7	LP-CC-30
LP-CC-1-4/10	LP-CC-3-2/10	LP-CC-7-1/2	
LP-CC-1-1/2	LP-CC-3-1/2	LP-CC-8	
LP-CC-1-6/10	LP-CC-4	LP-CC-9	

Recommended holders and blocks for Class CC fuses, see page 1-2.

Time-current characteristics — average melt

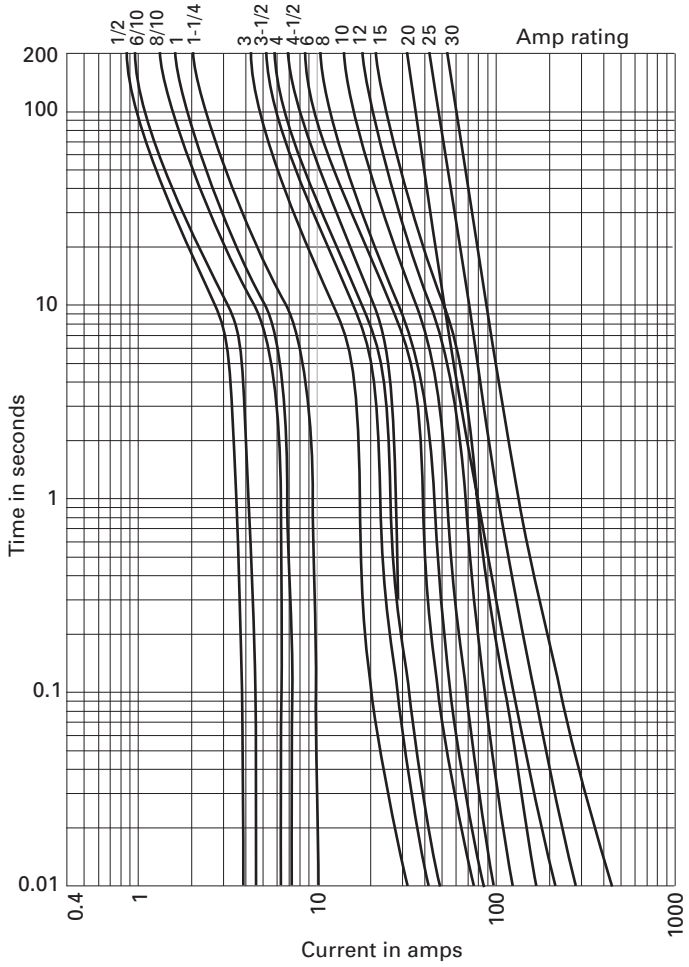

Current limitation curves

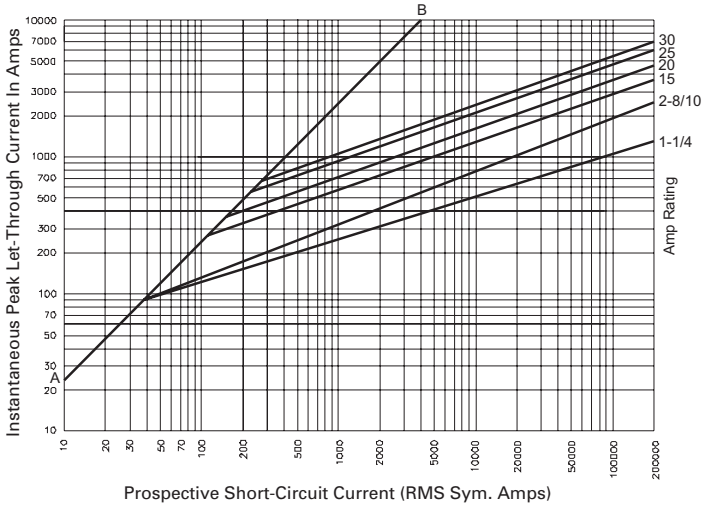

Data sheet no. 1023

FNQ-R Class CC Limitron™ time-delay, rejection-type fuse

Time-delay, branch circuit, rejection-type fuse. For superior electrical protection, Eaton recommends upgrading FNQ-R fuse applications to Bussmann series Low-Peak LP-CC fuses, see page 1-5. For dimensions, see page 1-3.

Ratings

- Volts
  - 600 Vac (or less)
  - 300 Vdc (15-20 A)
  - 32 Vdc (self certified)
- Amps 1/4-30 A
- IR
  - 200 kA RMS Sym.
  - 20 kA DC (15 and 20 A only)

Agency information

- UL Listed, Std 248-4, Class CC, Guide JDDZ, File E4273, CSA Certified, Class 1422-01, File 53787, RoHS compliant, CE

Features

- Class CC rejection feature, with appropriate fuse block, prevents inserting lesser-rated supplementary fuses
- Time-delay compatible with inrush characteristic of small control transformers
- Current limitation at Class CC levels provides maximum component short-circuit current rating protection
- 200 kA interrupting rating provides high ratings for control circuit locations

Typical applications

- Line protection, small control transformers
- Industrial controls and panels
- Isolated, in-line fuse holders

Catalog no. (amps)			
FNQ-R-1/4	FNQ-R-1-3/10	FNQ-R-3-2/10	FNQ-R-8
FNQ-R-3/10	FNQ-R-1-4/10	FNQ-R-3-1/2	FNQ-R-9
FNQ-R-4/10	FNQ-R-1-1/2	FNQ-R-4	FNQ-R-10
FNQ-R-1/2	FNQ-R-1-6/10	FNQ-R-4-1/2	FNQ-R-12
FNQ-R-6/10	FNQ-R-1-8/10	FNQ-R-5	FNQ-R-15
FNQ-R-3/4	FNQ-R-2	FNQ-R-5-6/10	FNQ-R-17-1/2
FNQ-R-8/10	FNQ-R-2-1/4	FNQ-R-6	FNQ-R-20
FNQ-R-1	FNQ-R-2-1/2	FNQ-R-6-1/4	FNQ-R-25
FNQ-R-1-1/8	FNQ-R-2-8/10	FNQ-R-7	FNQ-R-30
FNQ-R-1-1/4	FNQ-R-3	FNQ-R-7-1/2	

Recommended holders and blocks for Class CC fuses, see page 1-2.

Time-current characteristics — average melt

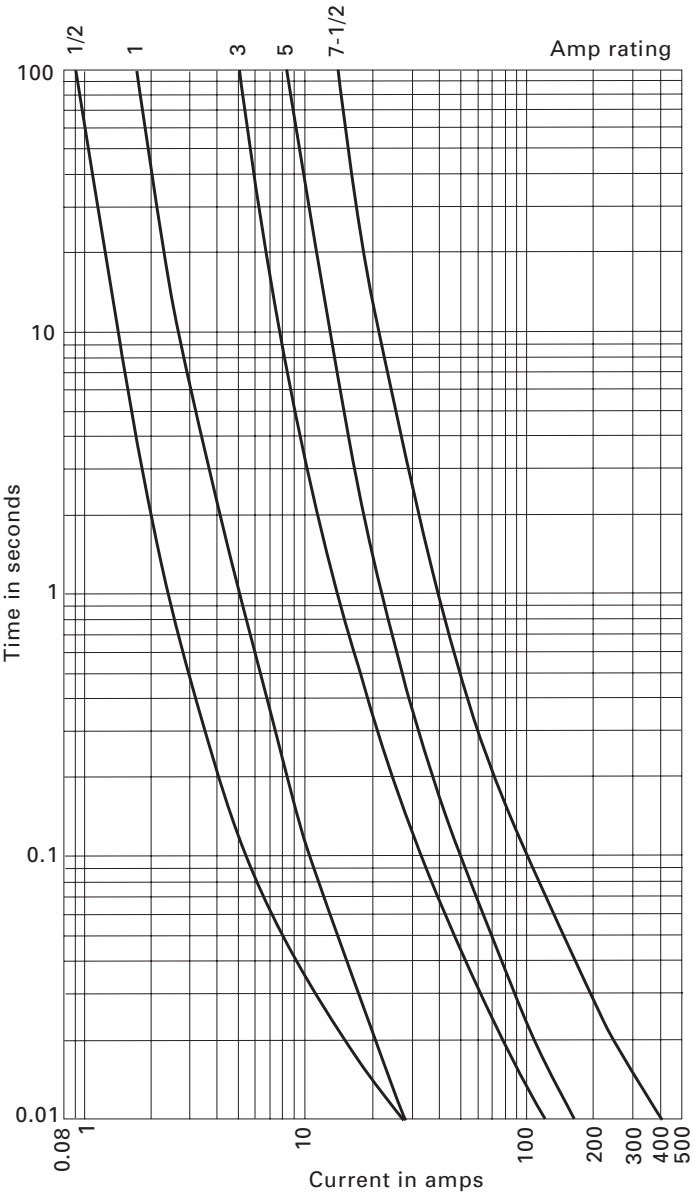

Data sheet no. 1014

KTK-R Class CC Limitron™ fast-acting, rejection-type fuse

Fast-acting, branch circuit, rejection-type fuse. For superior electrical protection, Eaton recommends upgrading KTK-R fuse applications to Bussmann series Low-Peak LP-CC fuses, see page 1-5. For dimensions, see page 1-3.

RoHS 2011/65/EU

Ratings

- Volts 600 Vac (or less)
- Amps 1/10-30 A
- IR 200 kA RMS Sym.

Agency information

- UL Listed, Std 248-4, Class CC, Guide JDDZ, File E4273, CSA Certified, File 53787, Class 1422-02, RoHS compliant, CE

Features

- Class CC rejection feature, with appropriate fuse block, prevents inserting lesser-rated supplementary fuses
- Current limitation at Class CC levels provides maximum component short-circuit current protection
- 200 kA interrupting rating provides high ratings for control circuit locations

Typical applications

- Specialized circuits
- Industrial controls and panels
- Isolated, in-line fuse holders (street lighting)

Catalog no. (amps)			
KTK-R-1/10	KTK-R-6/10	KTK-R-3-1/2	KTK-R-10
KTK-R-1/8	KTK-R-3/4	KTK-R-4	KTK-R-12
KTK-R-2/10	KTK-R-1	KTK-R-5	KTK-R-15
KTK-R-1/4	KTK-R-1-1/2	KTK-R-6	KTK-R-20
KTK-R-3/10	KTK-R-2	KTK-R-7	KTK-R-25
KTK-R-4/10	KTK-R-2-1/2	KTK-R-8	KTK-R-30
KTK-R-1/2	KTK-R-3	KTK-R-9	

Recommended holders and blocks for Class CC fuses, see page 1-2.

Time-current characteristics — average melt

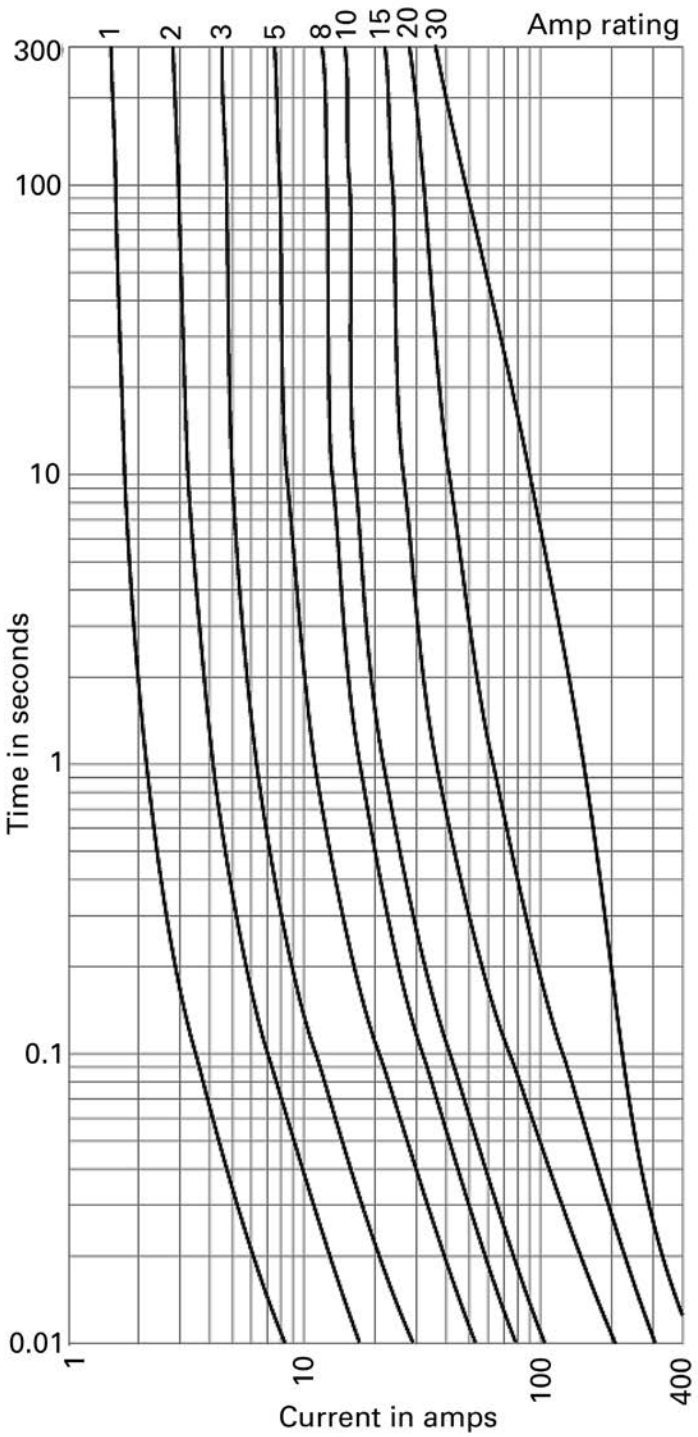

Data sheet no. 1015

TCF Class CF Low-Peak time-delay CUBEFuse™

The Bussmann series Low-Peak CUBEFuse is a finger-safe UL Class CF current-limiting, dual-element, time-delay branch circuit fuse and fuse holder system; 10 seconds minimum operating time at 500% rated amps. With Class J electrical performance, teh time-delay CUBEFuse is available in indicating and non-indicating versions, this finger-safe fuse has a very compact, space-saving size and is easily applied using the CUBEFuse holder (TCFH_N), UL 98 Compact Circuit Protector switch (CCP2-_CF) or Compact Circuit Protector Base (CCP2B up to 100 A) used in the Quik-Spec™ Coordination Panelboard). For dimensions, see page 1-3.

Ratings

- Volts
  - 600 Vac
  - 300 Vdc
- Amps
  - 6-400 A (indicating)
  - 1-400 A (non-indicating)
- Interrupting rating
  - 300 kA RMS Sym. (Up to 100 A UL)
  - 200 kA RMS Sym. (110 to 400 A UL)
  - 200 kA RMS Sym. (Up to 100 A CSA)
  - 100 kA DC (Up to 400 A UL and up to 100 A CSA)

Watts loss at rated current

Fuse amps	Watts
30	3.99
60	6.23
100	9.51
200	18.6
225	17.6
400	35.2

Agency information

- UL Listed Class CF fuse: Guide JDDZ, File E4273 (up to 400 A)
- CSA® Certified fuse: Class 1422-02, File 053787_C_000 (up to 100 A)
- CE (100 A and below)
- RoHS compliant

Operating and storage temperature range

- -40 to 80°C (-40°F to 176°F)

Data sheet no. 9000 (fuses) and 9007 (holders)

Features

- Smallest installed footprint of any UL Class CC, J, or R fuse solution
- Easy application using CUBEFuse holders (TCFH_N), UL 98 Compact Circuit Protector (CCP2) switches and Compact Circuit Protector Base (CCP2B up to 100 A). See data sheet 9007 for details on the CUBEFuse holder, 10801 for details on the CCP2-_ CF switch and 1161 for the CCP2B.
- Holders and switches have an amp rating rejection feature to help prevent overfusing; 30, 60 and 100 A switches and holders will hold any CUBEFuse up to its rating, 200 and 400 A switches and 200, 225 and 400 A holders will hold any CUBEFuse 110 A and above up to its rating
- The indicating version features local *easy*ID™ open fuse technology for faster troubleshooting and reduced downtime
- Faster response to damaging faults helps reduce destructive thermal and magnetic forces
- True dual-element fuse construction with a minimum 10 seconds time-delay at 500% of rating
- Long time-delay minimizes nuisance openings caused by temporary overloads and transient surges
- Up to 300 kA interrupting rating safely interrupts virtually any fault
- Robust cycling and inrush current withstand
- Low let-through currents under fault conditions
- Provides Type 2 "No Damage" protection for IEC motor starters when properly sized
- Easy selective coordination with any other Bussmann series Low-Peak Class CC, J, L or RK1 fuse with simple 2:1 amp ratio between upstream and downstream fuses

* Finger-safe status depends on final, installed application, and will require using accessory shrouds for 110 to 400 A ratings.

Typical applications

- Electrical panelboards
- Machinery disconnects
- Industrial controls and panels
- Required finger-safe systems

Catalog numbers (amps)			
Indicating CUBEFuse			
TCF6	TCF35	TCF90	TCF225
TCF10	TCF40	TCF100	TCF250
TCF15	TCF45	TCF110	TCF300
TCF17-1/2	TCF50	TCF125	TCF350
TCF20	TCF60	TCF150	TCF400
TCF25	TCF70	TCF175	
TCF30	TCF80	TCF200	
Non-Indicating CUBEFuse			
TCF1RN	TCF25RN	TCF70RN	TCF175RN
TCF3RN	TCF30RN	TCF80RN	TCF200RN
TCF6RN	TCF35RN	TCF90RN	TCF225RN
TCF10RN	TCF40RN	TCF100RN	TCF250RN
TCF15RN	TCF45RN	TCF110RN	TCF300RN
TCF17-1/2RN	TCF50RN	TCF125RN	TCF350RN
TCF20RN	TCF60RN	TCF150RN	TCF400RN

Recommended holders for Class CF fuses, see page 1-12.

Up to 100 A time-current characteristics — average melt

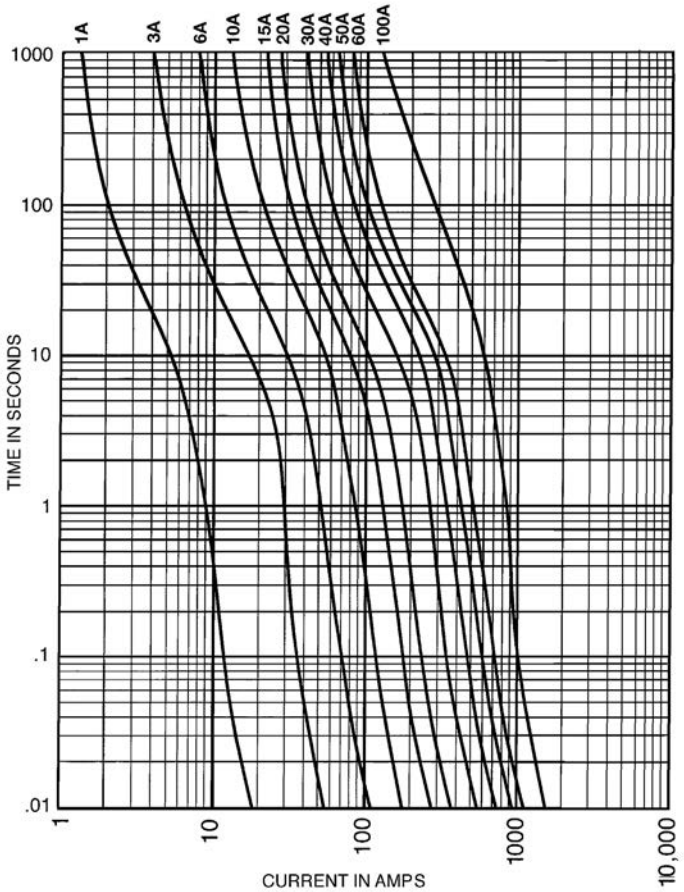

110 to 400 A time-current characteristics — average melt

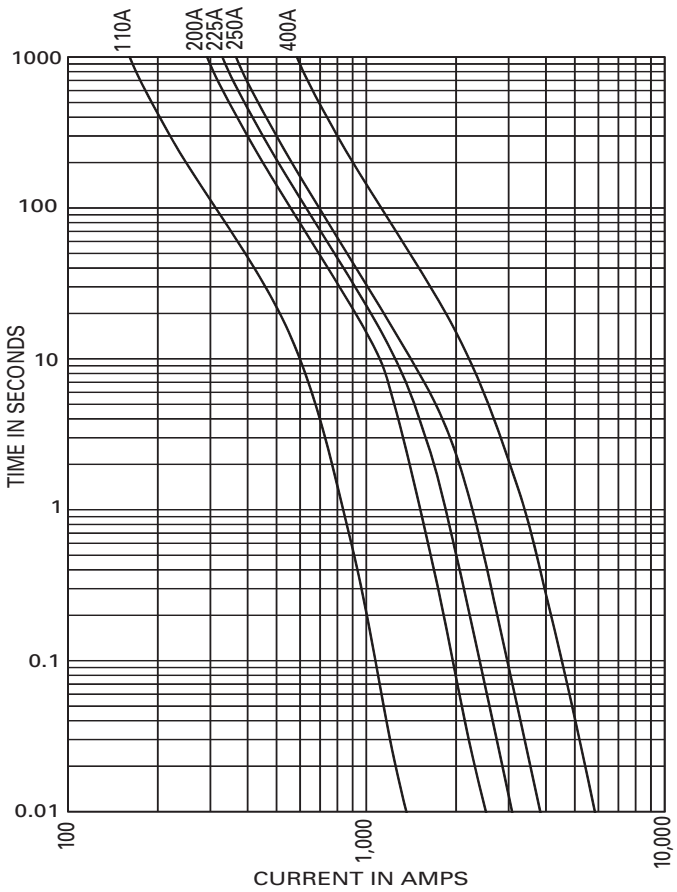

Up to 100 A current let-through curves

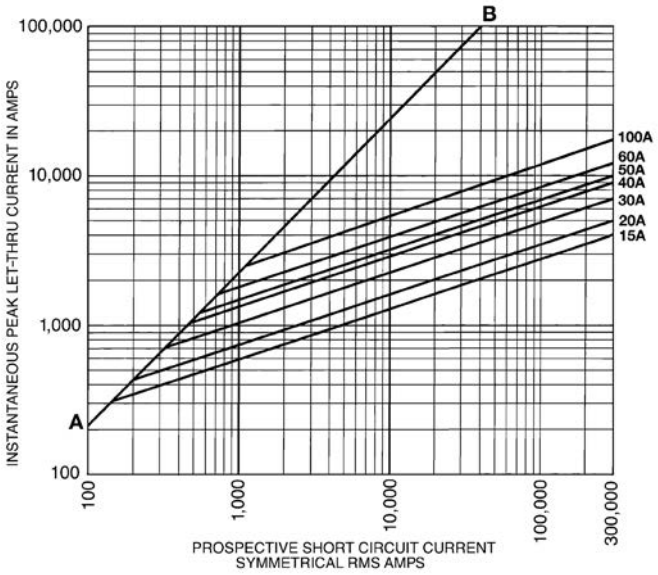

110 to 400 A current let-through curves

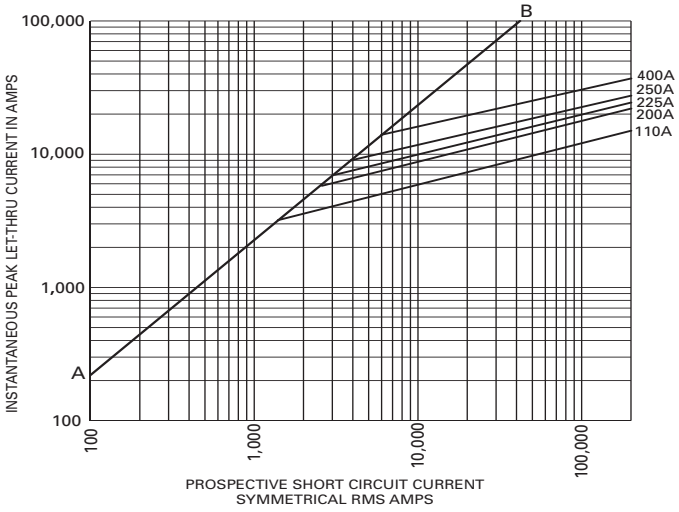

Data sheet no. 9000 (fuses) and 9007 (holders)

FCF Class CF fast-acting CUBEFuse

Finger-safe, non-indicating, fast-acting CUBEFuse for UPS and critical applications with a 4 minute maximum clearing time at 200%, rated current for 1 to 30 A fuse, 6 minute maximum clearing time at 200%, rated current for 35 to 60 A fuse. For dimensions, see page 1-3.

Ratings

- Volts 600 Vac/dc (or less)
- Amps 1-100 A
- IR
  - 300 kA RMS Sym. (UL up to 60 A)
  - 200 kA RMS Sym. (CSA all ratings and UL 70 to 100 A)
  - 50 kA DC

RoHS 2011/65/EU

Agency information

- UL Listed, Guide JDDZ, File E4273, CSA Certified, Class 1422- 02, File 53787, RoHS compliant, CE

Features

- The world's first finger-safe power fast-acting fuse system
- Smallest installed footprint of any class fuse including Class CC, J, and RK
- Class CF meets Class J fast-acting electrical performance requirements
- True fast-acting for faster response to damaging faults to help reduce destructive thermal and magnetic forces
- High interrupting rating to safely interrupt faults up to 300 kA
- No venting of arc or molten metal and gases during opening
- Low let-through currents under fault conditions

Catalog no. (amps)			
FCF1RN	FCF20RN	FCF45RN	FCF90RN
FCF3RN	FCF25RN	FCF50RN	FCF100RN
FCF6RN	FCF30RN	FCF60RN	
FCF10RN	FCF35RN	FCF70RN	
FCF15RN	FCF40RN	FCF80RN	

Recommended holders for Class CF fuses, see page 1-12.

Time-current characteristics — average melt

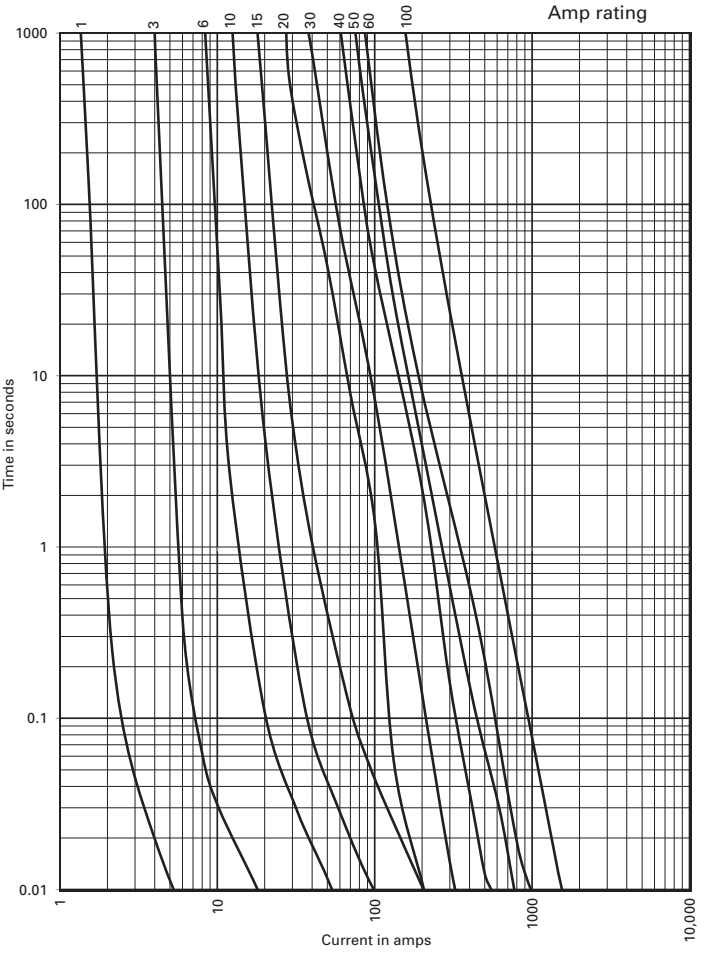

Current limitation curves

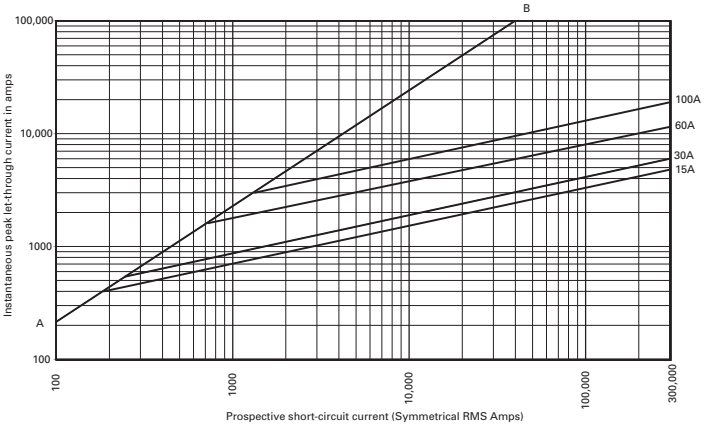

Data sheet no. 2147 (fuses) and 9007 (holders)

WCF fast-acting 690 V wind power CUBEFuse

Finger-safe, non-indicating, fast-acting CUBEFuse for wind power generation systems with a maximum clearing time at 200% rated current: 4 minutes for 1 to 30 amp fuses, 6 minutes for 35 to 60 amp fuses, 8 minutes for 70 to 100 amp fuses. For dimensions, see page 1-3.

Ratings

- Volts 690 Vac
- Amps 1-100 A
- IR
  - 50 kA AC (1-60 A)
  - 30 kA AC (70-100 A)

RoHS 2011/65/EU

Agency information

- UL Recognized, Guide JFHR2, File E56412, cURus Component Certified C22.2, RoHS compliant, CE

Features

- Maximize uptime and reliability using fuses designed and listed to UL 248-1
- Minimize chances of equipment failure and personnel injury when using full range fuses having the industry's fastest response time to low-magnitude faults
- Maximize return on investment with fuses proven to withstand harsh temperatures
- Minimize design time, operating outage time and replacement cost with fuses qualified in excessively changing environmental conditions
- Simplify compatibility with readily available industry standard holders
- Temperature derating — Designed to maximize rated capacity in elevated environmental temperatures
- Overload protection — Proven to clear faults faster than the UL requirement
- Power loss — Minimal energy consumption leading to increased efficiency

Typical application

- Protecting wind system transformers, pitch and speed controls, and turbine HVAC and lighting

Catalog no. (amps)				
WCF1RN	WCF15RN	WCF35RN	WCF60RN	WCF100RN
WCF3RN	WCF20RN	WCF40RN	WCF70RN	WCF100RN
WCF6RN	WCF25RN	WCF45RN	WCF80RN	
WCF10RN	WCF30RN	WCF50RN	WCF90RN	

Recommended holders for WCF fuses, see page 1-12.

Watts loss at rated current

Amps	Fuse catalog no.	Watts
15	WCF15RN	3.48
30	WCF30RN	5.45
60	WCF60RN	7.27
100	WCF100RN	11.5

Operating and storage temperature range

-40°C to 90°C

Mounting

The wind CUBEFuse must be mounted in the 690 V WCF holders that are rated for 690 volts. Not to be installed in the CCP2-CF or CCP2B disconnect switches. See page 1-12.

Time-current characteristic curves — average melt

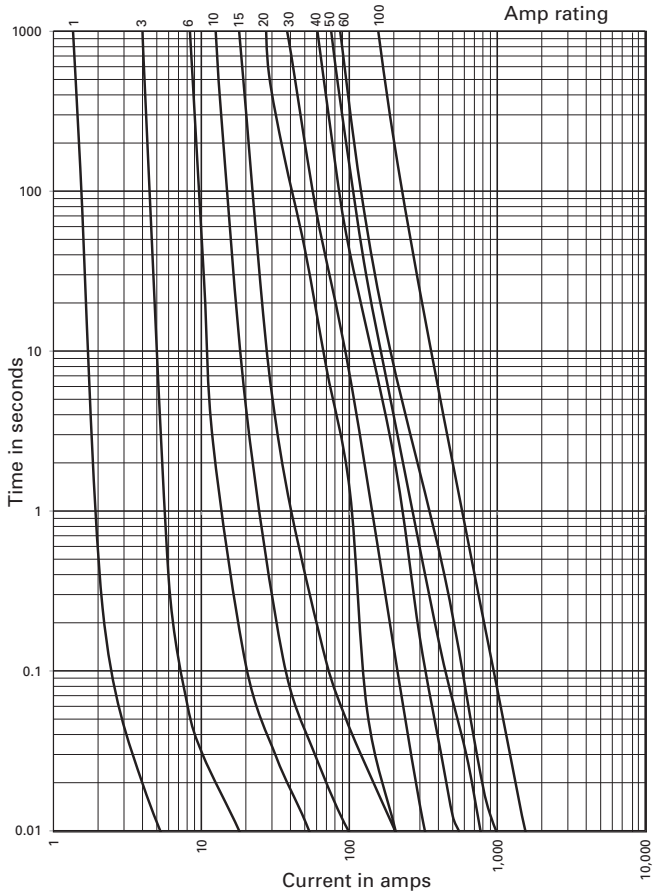

Current limitation curves

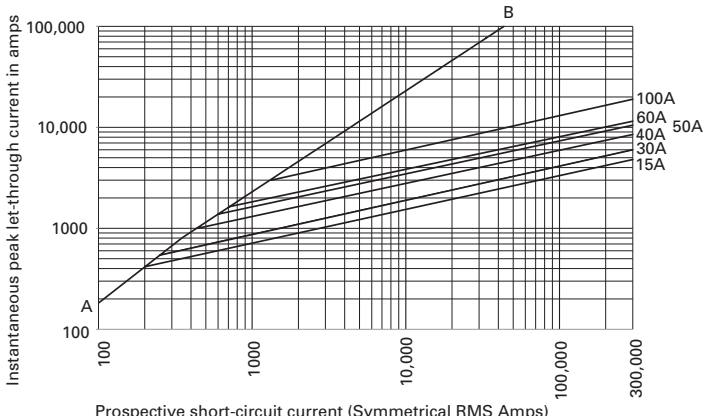

Data sheet no. 9009 (fuses) and 9007 (holders)

CUBEFuse™ finger-safe fuse holders

The Bussmann series CUBEFuse holder is a finger-safe modular system of single-pole 30, 60, 100, 200, 225 and 400 amp holders. All holders dovetailed together to create the desired number of poles for the application, including mixed amp ratings between the 30, 60 and 100 amp holders.

The 200, 225 and 400 amp holders require installing lugs to make conductor connections. These are listed on page 1-14.

The CUBEFuse holder is available as the 600 V UL Listed version utilizing the time-delay Low-Peak™ CUBEFuse (TCF up to 400 A) or fast-acting CUBEFuse (FCF up to 100 A), or the 690 V UL Recognized version utilizing the fast-acting wind CUBEFuse (WCF up to 100 A).

Ratings

- Volts
  - 600 Vac / 300 Vdc (UL Listed)
  - 690 Vac (UL Recognized up to 100 A)
- Amps
  - 30, 60, 100, 200, 225, 400 A
- SCCR
  - 300 kA RMS Sym. (30, 60, 100 A UL Listed)
  - 200 kA RMS Sym. (200, 225, 400 A UL Listed)
  - 200 kA RMS Sym. (CSA® Certified 100 A and below)
  - 100 kA DC (UL Listed and CSA Certified 100 A and below)
  - 50 kA RMS Sym. (UL Recognized)

Agency information

- 600 V UL Listed, Guide IZLT, File E14853
- 690 V UL Recognized, Guide IZLT2, File E14853
- CSA Certified, Class 6225-01, File 47235, cURus component Certified (30, 60 and 100 A holders)
- CE (100 A and below)
- RoHS compliant

Mounting

- 35 mm DIN-Rail/panel (Up to 100 A)
- Panel mount (200 to 400 A)

Operating and storage temperature range

- -40°C to 80°C (-40°F to 176°F)

Catalog no.	Max holder amps	Fuse amp range
600 V UL Listed		
TCFH30N	30	1-30
TCFH60N	60	1-60
TCFH100N	100	1-100
TCFH200N	200	110-200
TCFH225N	225	110-225
TCFH400N	400	110-400
690 V UL Recognized		
TCFH30NW	30	1-30
TCFH60NW	60	1-60
TCFH100NW	100	1-100

Features

- Finger-safe construction for enhanced safety*
- Amp rating rejection helps prevent overfusing by rejecting higher fuse amp ratings
- Smallest installed fuse and holder footprint of any Class J or R installation
- All holders dovetail together to create the required number of poles, mixed 30, 60 and 100 A holders dovetail together
- 30, 60 and 100 A holders have dual wire rated box lug terminals for wiring ease
- 200, 225 and 400 A holders available with a variety of lugs and terminal shrouds for application flexibility
- Up to 300 kA SCCR withstands high fault currents

* 200, 225 and 400 A holders require installed shrouds.

30, 60 and 100 A CUBEFuse holder fuse applications

All 30, 60 and 100 A CUBEFuse holders dovetail together to create the desired number of poles. Each holder accepts CUBEFuse amp ratings up to its rating. E.g., the 60 amp holder will accept a CUBEFuse from 1 to 60 A.

Holder catalog no.	Volts	CUBEFuse type and amp range		
		TCF and TCF_RN	FCF_RN	WCF_RN
TCFH30N	600	1-30	1-30	—
TCFH60N		1-60	1-60	
TCFH100N		1-100	1-100	
TCFH30NW	690	—	—	1-30
TCFH60NW				1-60
TCFH100NW				1-100

Data sheet no. 9007

Conductor ratings and torque for 30, 60 and 100 A holders

Ratings are for 75°C Cu AWG solid/stranded conductors. Torque is in N•m (lb-in).

Terminal wire rating	Holder catalog no. TCFH30N / TCFH30NW	TCFH60N / TCFH60NW	TCFH100N / TCFH100NW
Single	8-10; 2.8 (25), 12-18; 2.6 (20)	10-14; 2.6 (20), 4-8; 3.9 (35)	10-18; 2.6 (20)**, 1-8; 4.5 (40)†
Dual	10-18; 2.8 (25)*	10-18; 2.6 (20), 6-8; 3.9 (35)	6; 5.1 (45)†

* 10-18 AWG stranded, 14-18 AWG solid
** Solid and stranded
† Stranded

Recommended Bussmann series fuses

Type	Amp range	Data sheet
600 volt UL Listed		
Time-delay indicating Low-Peak™	6-100 A	9000
Time-delay non-indicating Low-Peak	1-100 A	
Fast-acting non-indicating	1-100 A	2147
690 volt UL Recognized		
Fast-acting wind power	1-100 A	9009

Dimensions — in (mm)

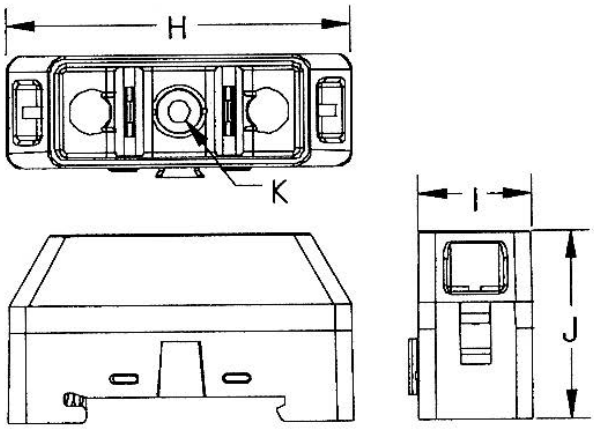

30 and 60 amp holders

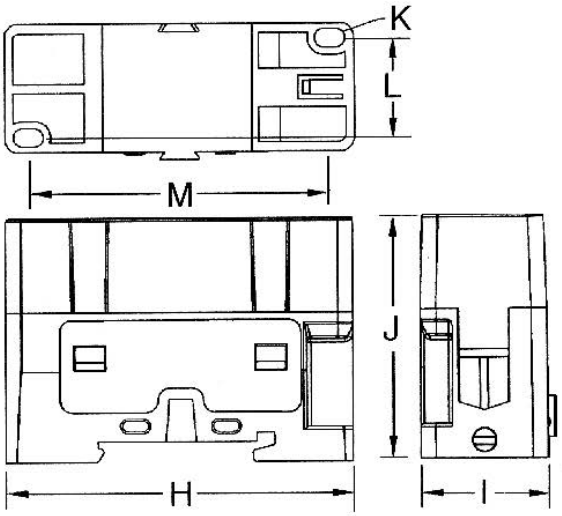

100 amp holder

Amps	H	I	J	K	L	M	Max height with fuse
30	2.3 (58)	0.76 (19)	1.36 (34)	0.15 (4)	—	—	2.36 (60)
60	2.6 (66)	1.03 (26)	1.60 (41)	0.17 (4)	—	—	2.73 (69)
100	2.91 (74)	1.05 (27)	2.01 (51)	0.15 (4)	0.80 (20)	2.51 (64)	3.27 (83)

200, 225 and 400 A CUBEFuse holder fuse applications

Holder catalog no.	Volts	CUBEFuse amp range
TCFH200N	600 Vac/300 Vdc	110-200
TCFH225N		110-225
TCFH400N		110-400*

* Achieving 400 A continuous current requires three ganged holders and installed lug catalog number CCP2-L4B-3 to permit the necessary copper conductor size.

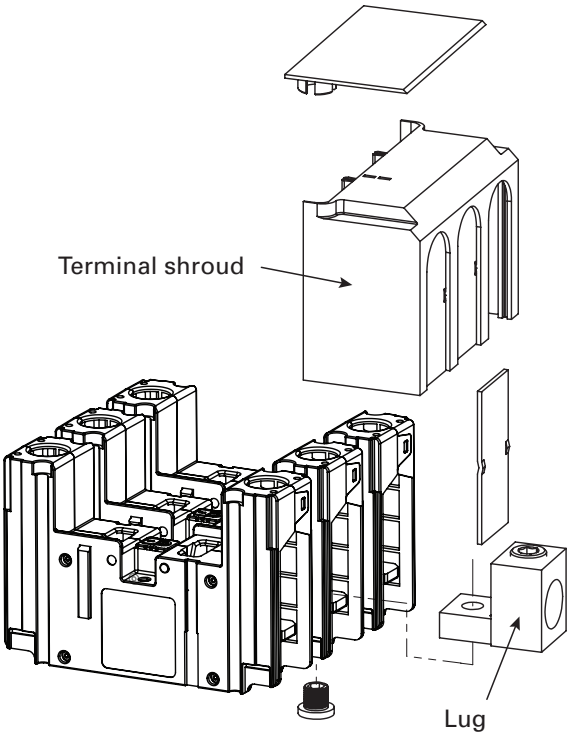

All 200, 225 and 400 amp holders require installing lugs. Only three ganged holders can accept terminal shrouds. See table below.

Available lug kits

For complete installation, the 200, 225 and 400 A CUBEFuse holders require lugs. The table below contains the information necessary for ordering the desired lug kit for the application.

Accessories

Catalog no.	Holder amps	Description
CCP2-TS2-3	200/225	3-pole terminal shroud
CCP2-PB2		Phase barriers (pack of 2)
CCP2-CWK2		1/4" QC terminals. Use with CCP2-L2-1A, CCP2-MW2-3 and CCP2-MW2-6 lugs (pack of 12)
CCP2-TS6-3	400	3-pole terminal shroud
CCP2-PB6		Phase barriers (pack of 2)

Recommended Bussmann series fuses

Type	Amp range	Data sheet
Time-delay indicating Low-Peak	110-400 A	9000
Time-delay non-indicating Low-Peak		

Available lugs, conductor ratings and terminal torques

Catalog no.	Description	Lugs per cat. no.	Wire range AWG (mm²)	Wire type/ temp.	Conductor torque N•m (lb-in)	Lug mounting screw torque N•m (lb-in)
200/225 A holders						
CCP2-L2-1	Stainless steel lug	1	350-4 (185-25)	Cu 75°C	20.3 (180)	0.9 (8)
CCP2-L2-1A	Aluminum lug*	1	350-4 (185-25)	Cu/Al 75°C	28.2 (250)	13.5 (120)
CCP2-MW2-3	3-port multi-wire terminal with shroud*†	3	2-14 (35-2.5)	Cu/Al 75°C	7.9 (70)	10.8 (95)
CCP2-MW2-6	6-port multi-wire terminal with shroud*†	3	6-14 (16-2.5)	Cu/Al 75°C	2.8 (25)	10.8 (95)
* These lugs also accept 1/4" quick connect control wire terminals. Order catalog number CCP2-CWK2 (package of 12 terminals).						
400 A holders						
CCP2-L4-1	Stainless steel lug	1	500-3 (240-35)	Cu 75°C	42.0 (375)	22.0 (200)
CCP2-L4-1A	Aluminum lug	1	500-3 (240-35)	Cu/Al 75°C	42.0 (375)	
CCP2-L4B-3	Stainless steel lug kit with shroud†	3	750-500 (400-240)	Cu 75°C	57.0 (500)	
CCP2-L4B-3A	Aluminum lug kit with shroud†	3	750-500 (400-240)	Cu/Al 75°C	62.0 (550)	
CCP2-L6-3	2-port stainless steel lug kit with shroud	3	(2) 500-2 (240-35)	Cu 75°C	42.0 (375)	
CCP2-L6-3A	2-port aluminum lug kit with shroud	3	(2) 500-2 (240-35)	Cu/Al 75°C	42.0 (375)	
CCP2-MW6-6	6-port multi-wire terminal with shroud†	3	1/0-14 (50-2.5)	Cu/Al 75°C	10-14 = 3.9 (35)	
					8 = 4.5 (40)	
					4-6 = 5.0 (45	
					1/0-2 = 5.6 (50)	

† This is a lug kit with three lugs and a shroud for installation on three ganged CUBEFuse holders.

Data sheet no. 9007

Dimensions — mm (in)

200/225 A holder

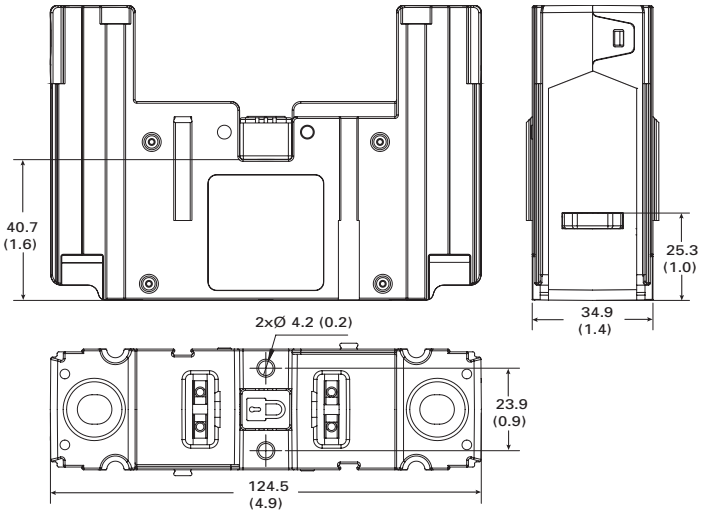

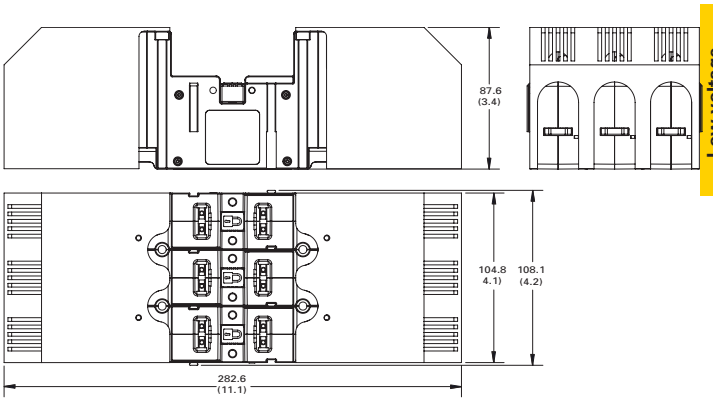

3-pole ganged 200 A holder with installed shroud

400 A holder

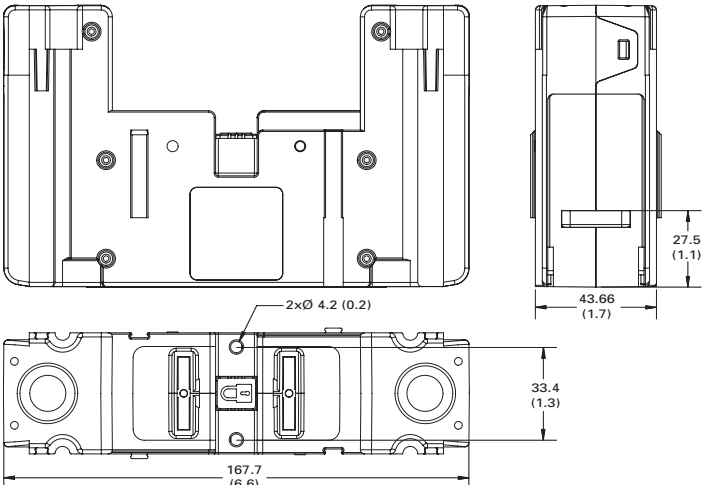

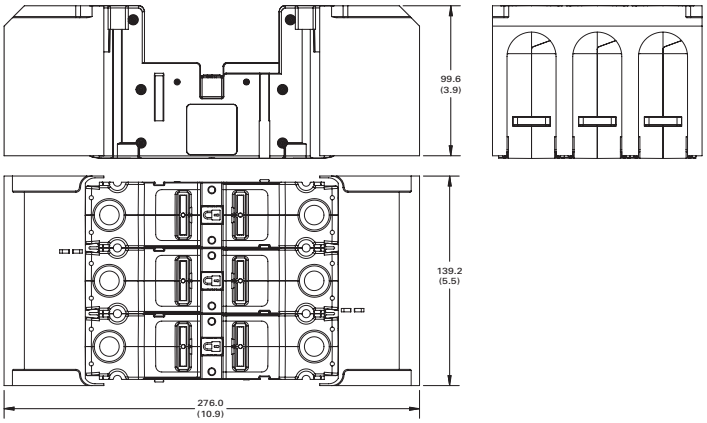

3-pole ganged 400 A holder with installed shroud

Ordering a complete 200/225 A holder installation

For a complete installation, select from the following required and optional components, and accessories.

		Catalog no.		
		Holders	**Amps**	**Poles**
Required		TCFH200N	200	1 **Order required quantity for installation**
		TCFH225N	225	
		And		
		Lug kits	**Description**	
		CCP2-L2-1	Stainless steel lug, 75° Cu only, 350 kcmil-4, 1 per pack	
		CCP2-L2-1A	Aluminum lug, 75°C Cu/Al, 350 kcmil-4, 1 per pack	
		CCP2-MW2-3	3-port multi-wire lug, 75°C Cu/Al, 2-14, 3 per pack, includes terminal shroud	
		CCP2-MW2-6	6-port multi-wire lug, 75°C Cu/Al, 6-14, 3 per pack, includes terminal shroud	
And				
Accessories		**Terminal shrouds**	**Description**	
		CCP2-TS2-3	3-pole terminal shroud with phase shields, 1 per pack	
		Phase barriers	**Description**	
		CCP2-PB2	Phase barriers, 2 per pack	
	And			
		Control terminals	**Description**	
		CCP2-CWK2	1/4" quick-connect control wire terminals - mounts on installed lug (cannot be used with lug CCP2-L2-3), 12 per pack	

Data sheet no. 9007

Ordering a complete 400 A holder installation

For a complete installation, select from the following required and optional components, and accessories.

		Catalog no.		
		Holder	**Amps**	**Poles**
Required		TCFH400N	400	1 **Order required quantity for installation**
		And		
		Lug kits	**Description**	
		CCP2-L4-1	Stainless steel lug, 75° Cu only, 500 kcmil-3, 1 per pack	
		CCP2-L4-1A	Aluminum lug, 75° Cu only, 500 kcmil-3, 1 per pack	
		CCP2-L4B-3	Stainless steel lug, 75° Cu only, 750-500 kcmil, 3 per pack, includes terminal shroud	
		CCP2-L4B-3A	Aluminum lug, 75°C Cu/Al, 750-500 kcmil, 3 per pack, includes terminal shroud	
		CCP2-L6-3	2-port stainless steel lug, 75° Cu only, 500 kcmil-2, 3 per pack, includes terminal shroud	
		CCP2-L6-3A	2-port aluminum lug, 75°C Cu/Al, 500 kcmil-2, 3 per pack, includes terminal shroud	
		CCP2-MW6-6	6-port multi-wire lug, 75°C Cu/Al, 1/0-14, 3 per pack, includes terminal shroud	
And				
Accessories		**Terminal shrouds**	**Description**	
		CCP2-TS6-3	3-pole terminal shroud with phase shields, 1 per pack	
		Phase barriers	**Description**	
		CCP2-PB6	Phase barriers, 2 per pack	

Data sheet no. 9007

SC Class G general purpose fuses

Fast-acting (1/2-6 A) and time-delay (7-60 A) Class G fuses. SC fuses are size rejecting measuring 13/32" in diameter by various lengths associated with their amp rating ranging from 1-5/16" to 2-1/4". This feature helps prevent overfusing. See the catalog numbers table for length by amp rating.

Ratings

- Volts
  - 600 Vac (1/2-20 A)
  - 480 Vac (25-60 A)
  - 170 Vdc (1/2-20 A)
  - 300 Vdc (25-60 A)
- Amps 1/2-60 A
- IR
  - 100 kA RMS Sym.
  - 10 kA DC

RoHS 2011/65/EU

Agency information

- UL Listed Std 248-5, Class G, Guide JDDZ, File E4273, CSA Certified, Class 1422-01, File 53787, RoHS compliant, CE

Features

- Class G current limiting for component and branch circuit protection
- 100 kA interrupting rating provides cost-effective branch circuit fusing for systems with high short-circuit current levels
- Rejection feature with variations in length helps prevent overfusing

Typical applications

- Fusible branch circuit panelboards
- HVAC branch circuit protection

Catalog no. (amps) and length			
1-5/16"	1-13/32"	1-5/8"	2-1/4"
SC-1/2	SC-20	SC-25	SC-35
SC-1		SC-30	SC-40
SC-1-1/2			SC-45
SC-2			SC-50
SC-2-1/2			SC-60
SC-3			
SC-4			
SC-5			
SC-6			
SC-7			
SC-8			
SC-10			
SC-12			
SC-15			

Recommended holders and blocks for Class G fuses, see page 1-2.

Time-current characteristics — average melt

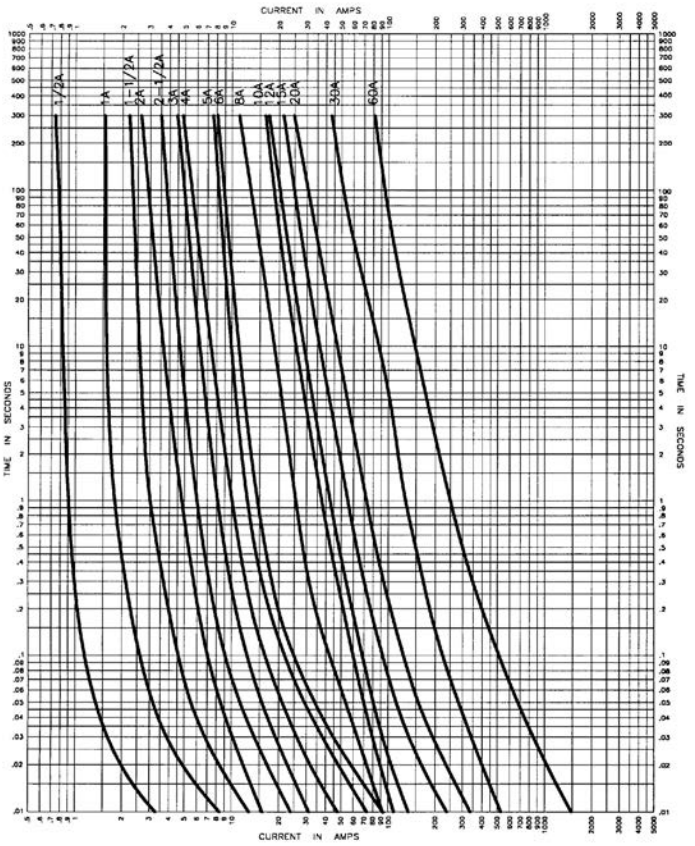

Current limitation curves

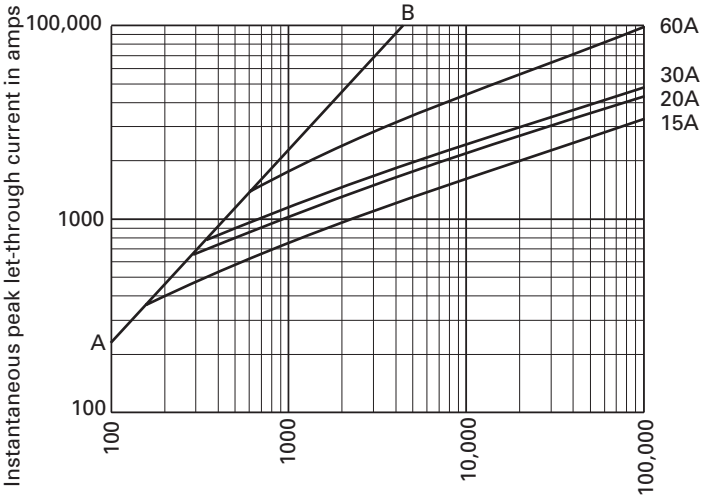

Prospective short-circuit current (Symmetrical RMS Amps)
A-B = Asymmetrical available peak (2.3 x Sym. RMS Amps)

Data sheet no. 1024

LPJ_SP Class J Low-Peak dual-element, time-delay fuses

Dual-element, time-delay Class J fuse; 10 seconds (minimum) at 500% rated amps, available with optional indication on select ratings (see catalog numbers table). For dimensions, see page 1-3.

Ratings

- Volts
  - 600 Vac (or less)
  - 300 Vdc (or less)*
- Amps 1-600 A
- IR
  - 300 kA RMS Sym.
  - 100 kA DC

* Does not apply to indicating versions.

Agency information

- UL Listed, Guide JDDZ, File E4273, CSA Certified Class J per CSA 22.2 No 248.8, Class 1422-02, File 53787, RoHS compliant, CE

Features

- Separate overload and short-circuit elements provide time delay for sizing of high inrush loads linked with Class J current limitation
- Selective coordination ratio of 2:1 (within Low-Peak fuse family) prevents electrical shutdowns from extending beyond the failed circuit
- Series combination ratings with branch circuit breakers allows broad range of coverage, independent of breaker manufacturer

Typical applications

- Power panelboards
- Branch circuit breaker panelboard mains
- Machinery disconnects
- Industrial control

Catalog no. (amps)			
LPJ-1SP	LPJ-4-1/2SP	LPJ-25SP*	LPJ-125SP*
LPJ-1-1/4SP	LPJ-5SP	LPJ-30SP*	LPJ-150SP*
LPJ-1-6/10SP	LPJ-5-6/10SP	LPJ-35SP*	LPJ-175SP*
LPJ-1-8/10SP	LPJ-6SP*	LPJ-40SP*	LPJ-200SP*
LPJ-2SP	LPJ-7SP*	LPJ-45SP*	LPJ-225SP*
LPJ-2-1/4SP	LPJ-8SP*	LPJ-50SP*	LPJ-250SP*
LPJ-2-1/2SP	LPJ-9SP*	LPJ-60SP*	LPJ-300SP*
LPJ-2-8/10SP	LPJ-10SP*	LPJ-70SP*	LPJ-350SP*
LPJ-3SP	LPJ-12SP*	LPJ-80SP*	LPJ-400SP*
LPJ-3-2/10SP	LPJ-15SP*	LPJ-90SP*	LPJ-450SP*
LPJ-3-1/2SP	LPJ-17-1/2SP*	LPJ-100SP*	LPJ-500SP*
LPJ-4SP	LPJ-20SP*	LPJ-110SP*	LPJ-600SP*

*Available with optional permanent replace fuse indication To order, place "I" at end of catalog number Example: LPJ-6SPI.
Available with silver plated terminals Add SP/ in front of catalog number.

Recommended holders and blocks for Class J fuses, see page 1-2.

Time-current characteristics — average melt

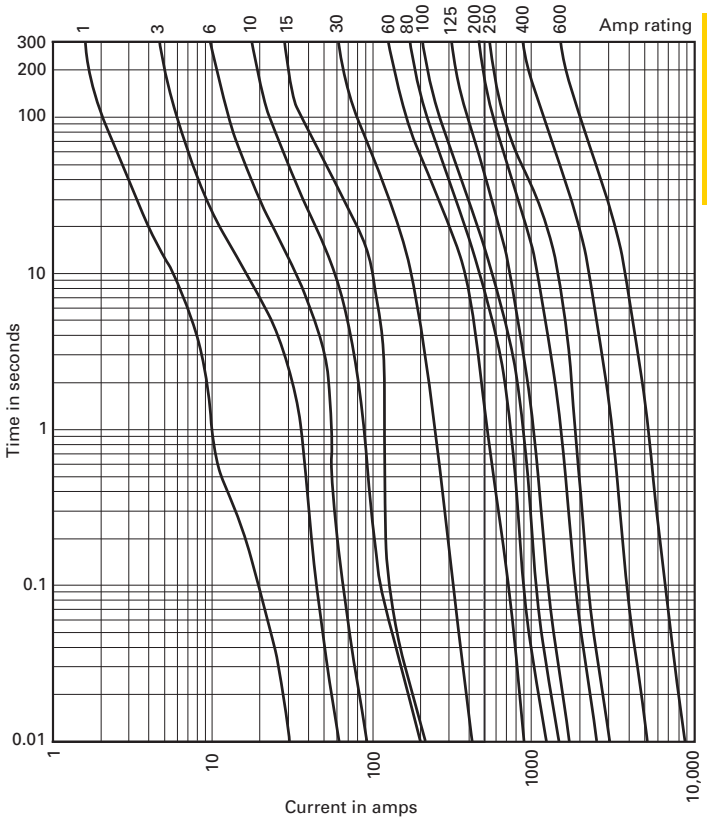

Current limitation curves

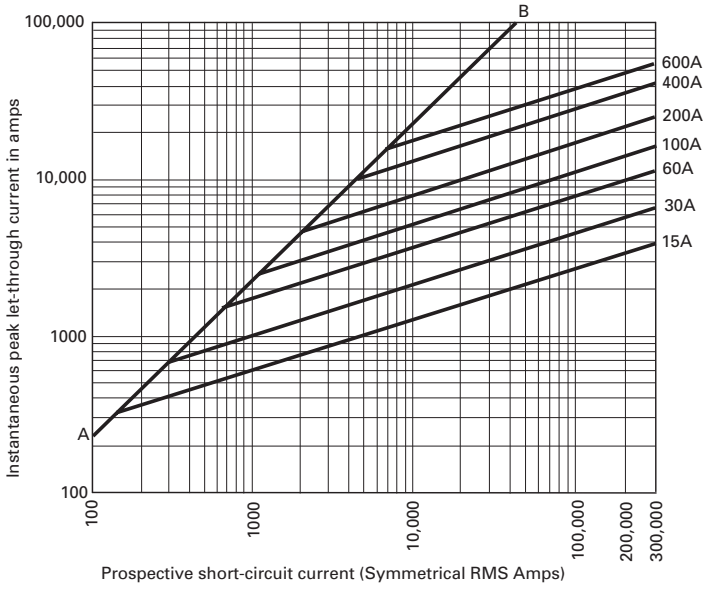

Data sheet no. 1006 (0-60 A) and 1007 (70-600 A)

JKS Class J Limitron™ fast-acting fuses

Fast-acting, Class J current-limiting fuse. For superior electrical protection, Eaton recommends upgrading JKS fuse applications to Bussmann series Low-Peak LPJ fuses See page 1-19. For dimensions, see page 1-3.

Ratings

- Volts 600 Vac (or less)
- Amps 1-600 A
- IR 200 kA RMS Sym.

Agency information

- 600 Vac, UL Listed, Std. 248-8, Class J, Guide JDDZ, File E4273, CSA Certified, Class 1422-02, File 53787, CE

Features

- Current limitation for non-inductive circuits provides Class J current-limiting response to maximum ground fault and short-circuit conditions
- 200 kA interrupting rating provides protection at all circuit locations
- Economical circuit protection for high-fault current circuits

Typical applications

- Power panelboards
- Machinery disconnects

Catalog no. (amps)			
JKS-1	JKS-15	JKS-70	JKS-225
JKS-2	JKS-20	JKS-80	JKS-250
JKS-3	JKS-25	JKS-90	JKS-300
JKS-4	JKS-30	JKS-100	JKS-350
JKS-5	JKS-35	JKS-110	JKS-400
JKS-6	JKS-40	JKS-125	JKS-450
JKS-8	JKS-45	JKS-150	JKS-500
JKS-10	JKS-50	JKS-175	JKS-600
JKS-12	JKS-60	JKS-200	

Recommended holders and blocks for JKS Class J fuses, see page 1-2.

Time-current characteristics — average melt

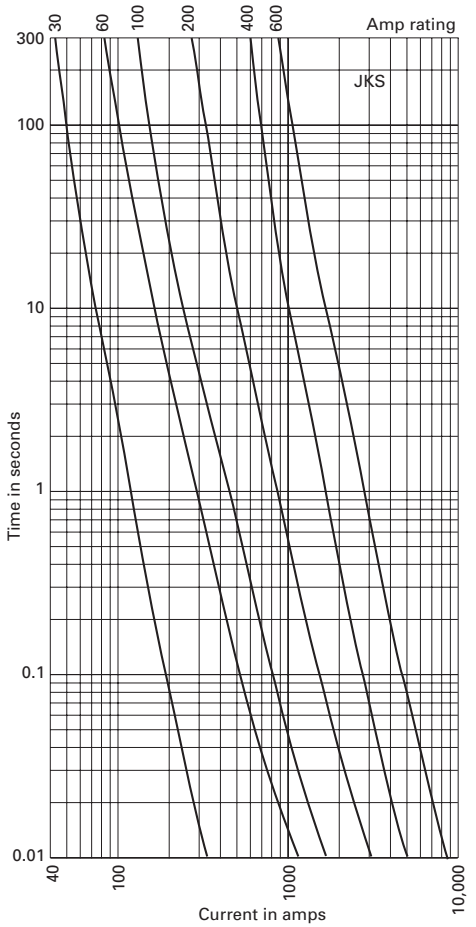

Current limitation curves

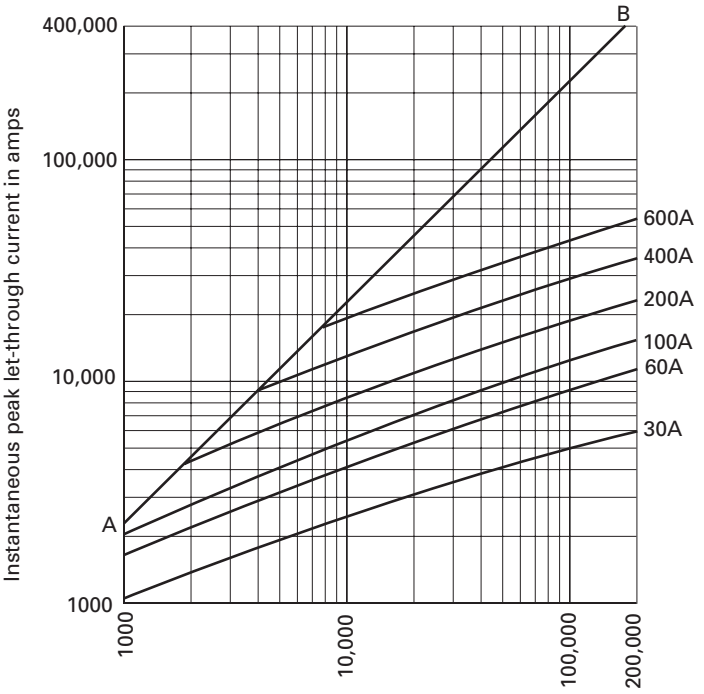

Prospective short-circuit current (Symmetrical RMS Amps)
A-B = Asymmetrical available peak (2.3 x Sym. RMS Amps)

Data sheet no. 1026 (1-60 A) and 1027 (70-600 A)

NON and NOS Class K5/H general purpose one-time fuses

General purpose, Class K5 and H non-current-limiting fuse 250 V NON and 600 V NOS fuses. For superior electrical protection, Eaton recommends upgrading NON (250 Vac) and NOS (600 Vac) fuse applications to Bussmann series Low-Peak LPN-RK (250 Vac) and LPS-RK (600 Vac) fuses, see pages 1-24 to 1-26. For dimensions, see page 1-3.

Ratings

- Volts
  - NON
    - 250 Vac
    - 125 Vdc (0-100 A)
  - NOS
    - 600 Vac
- Amps 1/8-600 A
- IR
  - 50 kA RMS Sym. (NON and NOS 0-60 A)
  - 10 kA RMS Sym. (NON and NOS 65-600 A)
  - 50 kA @ 125 Vdc (NON 0-60 A)
  - 10 kA @ 125 Vdc (NON 65-100 A)

Agency information

- UL Listed
  - 250 V Class K5 (0-60 A), Std 248-9, Class H (65-600 A), Std 248-6, (125 Vac, NON 0-100 A)
  - 600 V Class K5 (0-60 A), Std 248-9, Class H (70-600 A), Std 248-6, Guide JDDZ, File E4273
- CSA Certified
  - 250 V (0-12, 65-600 A)†
  - 600 V (0-600 A), Class 1421-01, File 53787
- CE

† For CSA Certified 15-60 A ratings, see PON in Section 5, page 2.

Features

- Basic overcurrent protection.

Typical applications

- Light duty circuit locations

Catalog no. (amps)			
250 V NON			
NON-1/8	NON-5	NON-40	NON-175
NON-1/2	NON-6	NON-45	NON-200
NON-3/4	NON-6-1/4	NON-50	NON-225
NON-8/10	NON-7	NON-60	NON-250
NON-1	NON-8	NON-65	NON-300
NON-1-1/4	NON-9	NON-70	NON-350
NON-1-1/2	NON-10	NON-75	NON-400
NON-1-6/10	NON-12	NON-80	NON-450
NON-2	NON-15	NON-90	NON-500
NON-2-1/2	NON-20	NON-100	NON-600
NON-3	NON-25	NON-110	
NON-3-2/10	NON-30	NON-125	
NON-4	NON-35	NON-150	
600 V NOS			
NOS-1	NOS-12	NOS-70	NOS-200
NOS-2	NOS-15	NOS-75	NOS-225
NOS-3	NOS-20	NOS-80	NOS-250
NOS-4	NOS-25	NOS-90	NOS-300
NOS-5	NOS-30	NOS-100	NOS-350
NOS-6	NOS-35	NOS-110	NOS-400
NOS-7	NOS-40	NOS-125	NOS-450
NOS-8	NOS-45	NOS-150	NOS-500
NOS-9	NOS-50	NOS-175	NOS-600
NOS-10	NOS-60		

Recommended fuse reducers

250 V			600 V		
Fuse amps	Clip amp size	Catalog no. (pair)	Fuse amps	Clip amp size	Catalog no. (pair)
30	60	NO.263	30	60	NO.663
30	100	NO.213	30	100	NO.216
60	100	NO.216	60	100	NO.616
60	200	NO.226	60	200	NO.626
100	200	NO.2621	100	200	NO.2621
100	400	NO.2641	100	400	NO.2641
200	400	NO.2642	200	400	NO.2642
100	600	NO.2661	100	600	NO.2661
200	600	NO.2662	200	600	NO.2662
400	600	NO.2664	400	600	NO.2664

Recommended blocks for Class K5 and H fuses, see page 1-2.

KRP-C_SP Class L Low-Peak time-delay fuses

Time-delay Class L fuses — 4 seconds (minimum) at 500% rated amps. Use KRP-CL for current ratings under 601 A. For dimensions, see page 1-4.

Ratings

- Volts
  - 600 Vac (or less)
  - 300 Vdc (601-2000 A, 3000 A)
- Amps 601-6000 A
- IR
  - 300 kA RMS Sym.
  - 100 kA DC

Agency information

- UL Listed 248-10, Guide JFHR, File E56412, CSA Certified, Class 1422-02, File 53787, Class L per CSA C22.2, No 248.10, RoHS compliant, CE

Features

- Time-delay of 4 seconds at 5 times rating allows closer sizing on large motor loads combined with Class L current limitation
- Selective coordination ratio of 2:1 (within Low-Peak fuse family) prevents electrical shutdowns from extending beyond the failed circuit
- Interrupting rating of 300 kA RMS symmetrical provides adequate ratings without obsolescence for all electrical systems, big or small
- Quality construction, using high-grade materials, provides lower watts loss and operating temperatures with superior arc quenching during current-limiting action

Typical applications

- Large distribution switchboards
- Power panelboards
- Large machinery disconnects

Catalog no. (amps)			
KRP-C-601SP	KRP-C-1000SP	KRP-C-1800SP	KRP-C-3500SP
KRP-C-650SP	KRP-C-1100SP	KRP-C-1900SP	KRP-C-4000SP
KRP-C-700SP	KRP-C-1200SP	KRP-C-2000SP	KRP-C-4500SP
KRP-C-750SP	KRP-C-1350SP	KRP-C-2001SP	KRP-C-5000SP
KRP-C-800SP	KRP-C-1400SP	KRP-C-2400SP	KRP-C-6000SP
KRP-C-801SP	KRP-C-1500SP	KRP-C-2500SP	
KRP-C-900SP	KRP-C-1600SP	KRP-C-3000SP	

Recommended blocks for Class L fuses, see page 1-2.

Time-current characteristics — average melt

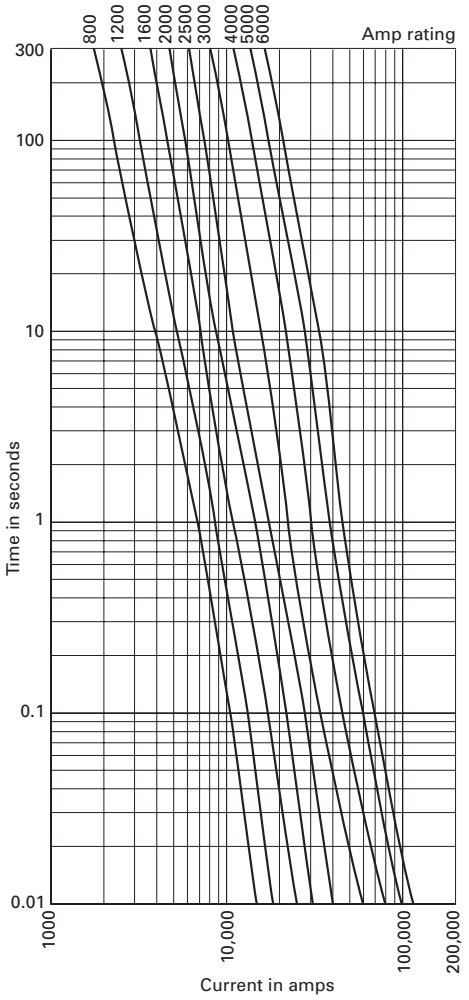

Current limitation curves

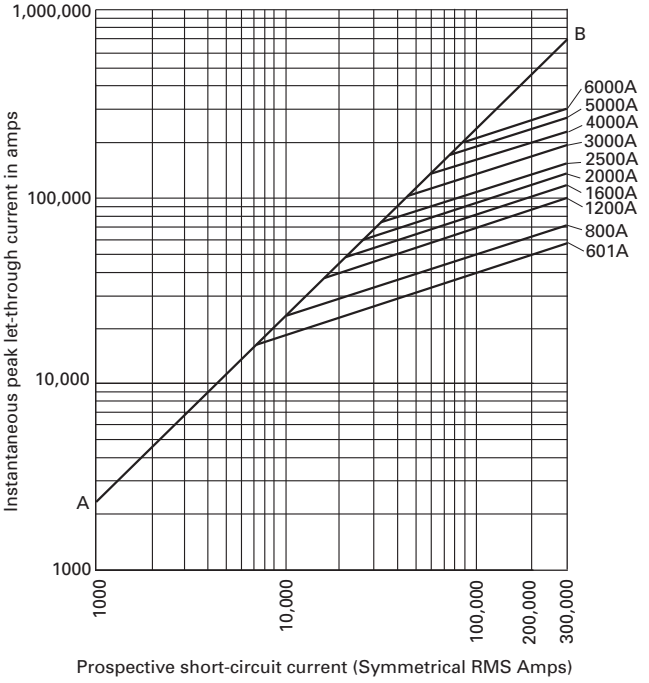

Data sheet no. 1008(601-2000 A) and 1009 (2001-6000 A)

KRP-CL current-limiting, time-delay fuses

Current-limiting, time-delay fuse with Class L dimensions for the 601-800 A case size. For dimensions, see page 1-4.

Ratings

- Volts 600 Vac (or less)
- Amps 225-600 A
- IR 200 kA RMS Sym.

RoHS 2011/65/EU

Agency information

- RoHS compliant

Features

- Time-delay of 4 seconds at 5 times rating allows closer sizing inductive loads coupled with an equivalent Class L current limitation
- 601 to 800 A Class L case size permits applying circuit protection from 225 to 600 A for downsize fusing of 800 amp Class L fused switches

Typical applications

- Large distribution switchboards
- Power panelboards
- Machinery disconnects

Catalog no. (amps)			
KRP-CL-225	KRP-CL-300	KRP-CL-400	KRP-CL-500
KRP-CL-250	KRP-CL-350	KRP-CL-450	KRP-CL-600

Recommended blocks for Class L fuses, see page 1-2.

KTU Class L Limitron fast-acting fuses

Fast-acting, Class L fuses. For superior electrical protection, Eaton recommends upgrading KTU fuse applications to Bussmann series Low-Peak KRP-C fuses, see page 1-22. For dimensions, see page 1-4.

Ratings

- Volts 600 Vac (or less)
- Amps 601-6000 A
- IR 200 kA RMS Sym.

RoHS 2011/65/EU

Agency information

- UL Listed, Std 248-10, Class L, Guide JDDZ, File E4273, CSA Certified, Class 1422-02, File 53787, RoHS compliant, CE

Features

- 200 kA interrupting rating provides protection at all circuit locations
- Economical protection for high-fault current circuits
- Quality construction using high-grade materials provides lower watts loss and operating temperatures with superior arc quenching during current-limiting action

Typical applications

- Large distribution switchboards
- Power panelboards

Catalog no. (amps)			
KTU-601	KTU-850	KTU-1500	KTU-2500
KTU-650	KTU-900	KTU-1600	KTU-3000
KTU-700	KTU-1000	KTU-1800	KTU-3500
KTU-750	KTU-1100	KTU-2000	KTU-4000
KTU-800	KTU-1200	KTU-2001	KTU-5000
KTU-801	KTU-1400	KTU-2400	KTU-6000

Recommended blocks for Class L fuses, see page 1-2.

KLU Class Limitron time-delay fuses

Time-delay, Class L fuses - 5 seconds (minimum) at 500% rated amps. For superior electrical protection, Eaton recommends upgrading KLU fuse applications to Bussmann series Low-Peak KRP-C fuses, see page 1-22. Use KRP-CL for current ratings under 601 A. For dimensions, see page 1-4.

Ratings

- Volts 600 Vac (or less)
- Amps 601-4000 A
- IR 200 kA RMS Sym.

Agency information

- UL Listed, Std 248-10, Class L, Guide JDDZ, File E4273, CSA Certified, CSA Class 1422-02, File 53787, RoHS compliant, CE

Features

- 200 kA interrupting rating provides protection at all circuit locations
- Economical protection for high-fault current circuits

Typical applications

- Large distribution switchboards
- Power panelboards
- Large machinery disconnects

Catalog no. (amps)			
KLU-601	KLU-1000	KLU-1800	KLU-4000
KLU-650	KLU-1200	KLU-2000	
KLU-700	KLU-1500	KLU-2500	
KLU-800	KLU-1600	KLU-3000	

Recommended blocks for Class L fuses, see page 1-2.

LPN-RK_SP (250 V) and LPS-RK_SP (600 V) Class RK1 Low-Peak dual-element, time-delay fuses

Current-limiting, dual-element, time-delay Class RK1 fuses; 10 seconds (minimum) at 500% rated amps (8 seconds for 0-30 A sizes). Available with optional indication on select ratings (see catalog numbers table). For dimensions, see page 1-3.

Ratings

- Volts
  - LPN-RK
    - 250 Vac (or less)
    - 125 Vdc* (0-60 A)
    - 250 Vdc* (70-600 A)
  - LPS-RK
    - 600 Vac (or less)
    - 300 Vdc*
- Amps 1/10-600 A
- IR
  - 300 kA RMS Sym.
  - 100 kA DC

* Does not apply to indicating versions.

Agency information

- UL Listed, Guide JDDZ, File E4273, CSA Certified, Class RK1 per CSA C22.2, No 248.12, Class 1422-02, File 53787, CE

Features

- Separate overload and short-circuit elements provide time delay for close sizing of high inrush loads linked with RK1 current-limitation and selective coordination ratio of 2:1 (within Low-Peak fuse family) helps prevent widespread blackouts
- Inventory consolidation of Class RK1, RK5 and H fuses for reduced SKU investment and minimizing potential for misapplying fuse
- 300 kA RMS symmetrical interrupting rating provides adequate ratings without obsolescence for all electrical systems, big or small
- Insulated end caps reduces exposure to live parts and extends air gap to distance between blades of adjacent mounted fuses or to housing

Typical applications

- Large distribution switchboards
- Power panelboards
- Motor control centers
- Machinery disconnect switches

Data sheet no. 1013

Data sheet no. LPN; 1003 (up to 60 A), 1007 (70-600 A)
LPS 1001 (up to 60 A), 1002 (70-600 A)

Catalog no. (amps)			
250 V LPN-RK*			
LPN-RK-1/10SP	LPN-RK-2-1/4SP	LPN-RK-12SP	LPN-RK-110SP**
LPN-RK-15/100SP	LPN-RK-2-1/2SP	LPN-RK-15SP	LPN-RK-125SP**
LPN-RK-2/10SP	LPN-RK-2-8/10SP	LPN-RK-17-1/2SP	LPN-RK-150SP**
LPN-RK-3/10SP	LPN-RK-3SP	LPN-RK-20SP	LPN-RK-175SP**
LPN-RK-4/10SP	LPN-RK-3-2/10SP	LPN-RK-25SP	LPN-RK-200SP**
LPN-RK-1/2SP	LPN-RK-3-1/2SP	LPN-RK-30SP	LPN-RK-225SP**
LPN-RK-6/10SP	LPN-RK-4SP	LPN-RK-35SP**	LPN-RK-250SP**
LPN-RK-8/10SP	LPN-RK-4-1/2SP	LPN-RK-40SP**	LPN-RK-300SP**
LPN-RK-1SP	LPN-RK-5SP	LPN-RK-45SP**	LPN-RK-350SP**
LPN-RK-1-1/8SP	LPN-RK-5-6/10SP	LPN-RK-50SP**	LPN-RK-400SP**
LPN-RK-1-1/4SP	LPN-RK-6SP	LPN-RK-60SP**	LPN-RK-450SP**
LPN-RK-1-4/10SP	LPN-RK-6-1/4SP	LPN-RK-70SP**	LPN-RK-500SP**
LPN-RK-1-6/10SP	LPN-RK-8SP	LPN-RK-80SP**	LPN-RK-600SP**
LPN-RK-1-8/10SP	LPN-RK-9SP	LPN-RK-90SP**	
LPN-RK-2SP	LPN-RK-10SP	LPN-RK-100SP**	
600 V LPS-RK			
LPS-RK-1/10SP	LPS-RK-2-1/4SP	LPS-RK-10SP**	LPS-RK-100SP**
LPS-RK-2/10SP	LPS-RK-2-1/2SP	LPS-RK-12SP**	LPS-RK-110SP**
LPS-RK-3/10SP	LPS-RK-2-8/10SP	LPS-RK-15SP**	LPS-RK-125SP**
LPS-RK-4/10SP	LPS-RK-3SP	LPS-RK-17-1/2SP**	LPS-RK-150SP**
LPS-RK-1/2SP	LPS-RK-3-2/10SP	LPS-RK-20SP**	LPS-RK-175SP**
LPS-RK-6/10SP	LPS-RK-3-1/2SP	LPS-RK-25SP**	LPS-RK-200SP**
LPS-RK-8/10SP	LPS-RK-4SP	LPS-RK-30SP**	LPS-RK-225SP**
LPS-RK-1SP	LPS-RK-4-1/2SP	LPS-RK-35SP**	LPS-RK-250SP**
LPS-RK-1-1/8SP	LPS-RK-5SP	LPS-RK-40SP**	LPS-RK-300SP**
LPS-RK-1-1/4SP	LPS-RK-5-6/10SP	LPS-RK-45SP**	LPS-RK-350SP**
LPS-RK-1-4/10SP	LPS-RK-6SP**	LPS-RK-50SP**	LPS-RK-400SP**
LPS-RK-1-1/2SP	LPS-RK-6-1/4SP**	LPS-RK-60SP**	LPS-RK-450SP**
LPS-RK-1-6/10SP	LPS-RK-7SP**	LPS-RK-70SP**	LPS-RK-500SP**
LPS-RK-1-8/10SP	LPS-RK-8SP**	LPS-RK-80SP**	LPS-RK-600SP**
LPS-RK-2SP	LPS-RK-9SP**	LPS-RK-90SP**	

* 0-60 A fuses available with Nickel plate option. Example: LPS-RK30SPNP).
70-600 A fuses available with tin-plate option. Example: LPS-RK-100SP-TP.
**Available with optional indication; to order, place "I" at end of catalog number
Example: LPN-RK-35SP**I** or LPS-RK-15SP**I**.

Recommended blocks for Class RK1 fuses, see page 1-2.

LPN Time-current characteristics — average melt

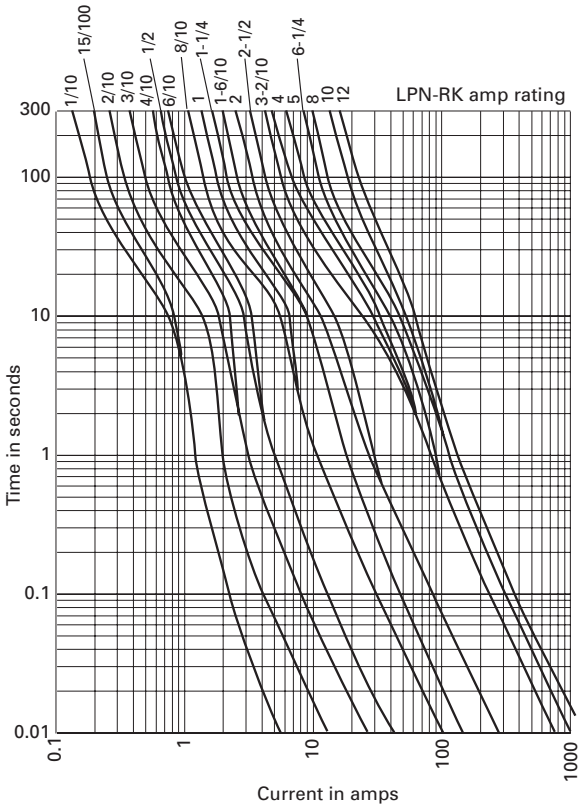

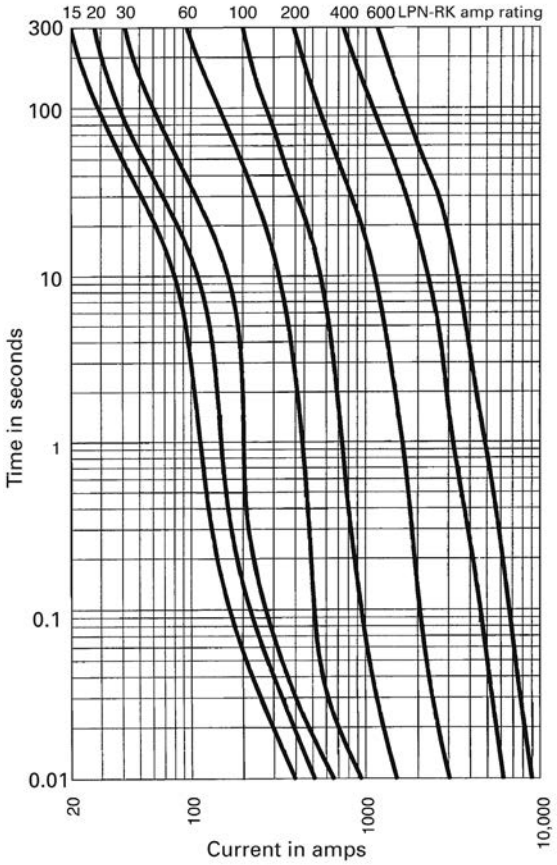

Data sheet no. LPN-RK 1003 (up to 60 A), 1007 (70-600 A)
LPS-RK 1001 (up to 60 A), 1002 (70-600 A)

LPS Time-current characteristics — average melt

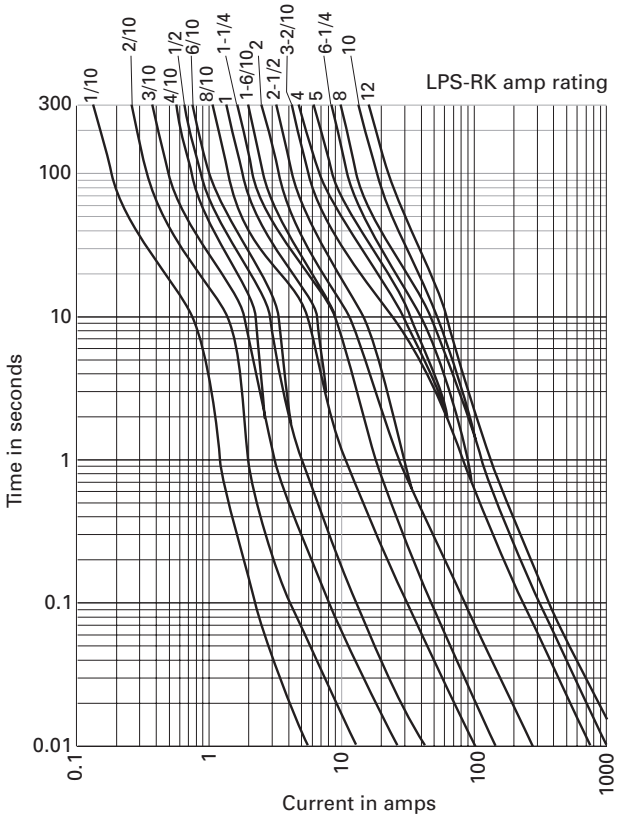

LPN Current limitation curves

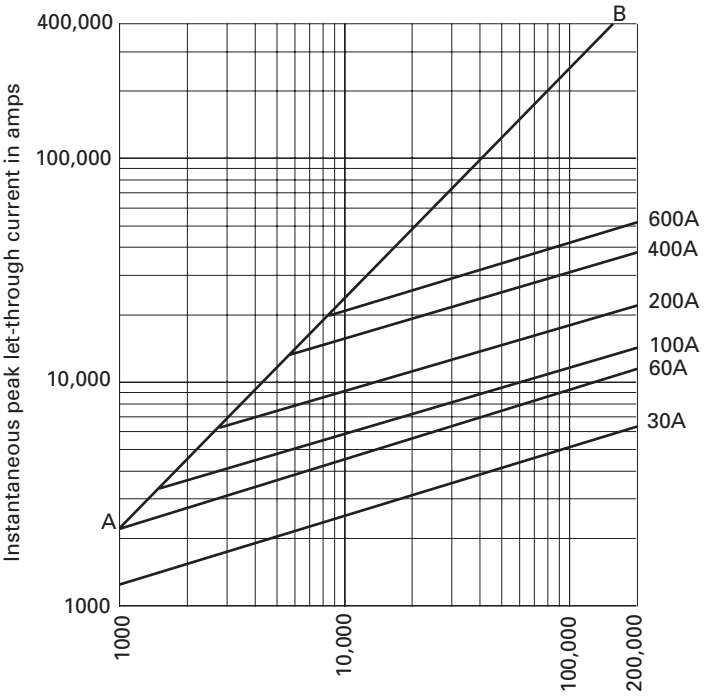

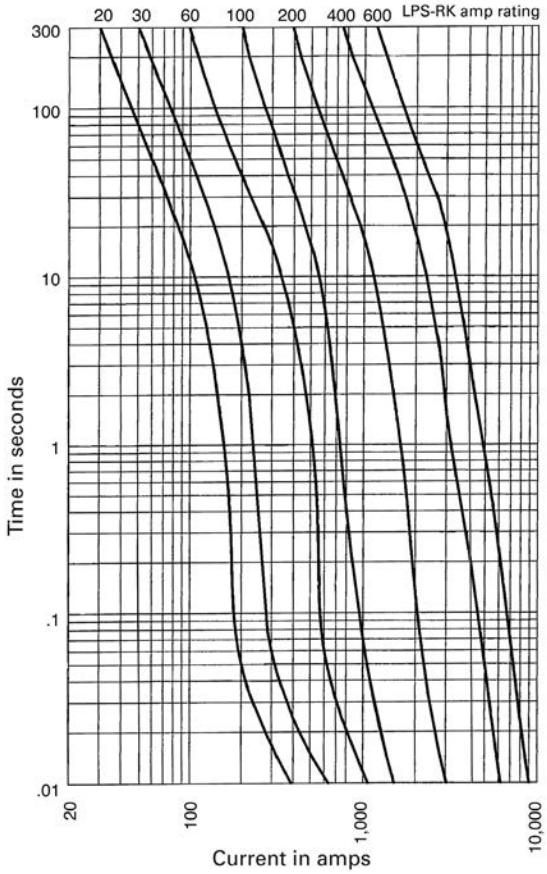

LPS Current limitation curves

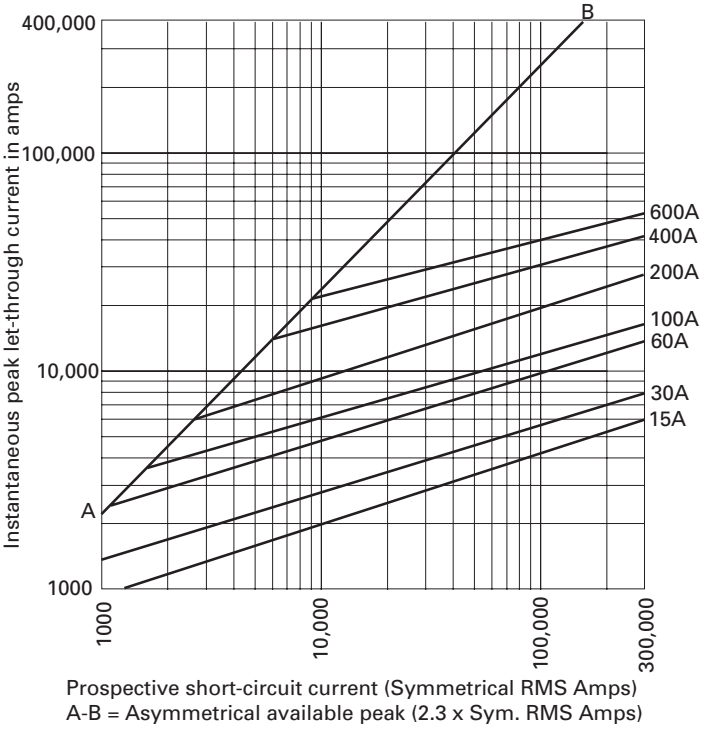

Data sheet no. LPN-RK 1003 (up to 60 A), 1007 (70-600 A)
LPS-RK 1001 (up to 60 A), 1002 (70-600 A)

KTN-R (250 V) and KTS-R (600 V) Class RK1 Limitron fast-acting fuses

Fast-acting, current-limiting Class RK1 fuses. For superior electrical protection, Eaton recommends upgrading KTN-R fuse applications to Bussmann series Low-Peak LPN-RK 250 V or LPS-RK 600 V fuses, see pages 1-24 to 1-26. For dimensions, see page 1-3.

Ratings

- Volts
  - KTN-R
    - 250 Vac (or less)
    - 250 Vdc (70-350 A)
  - KTS-R 600 Vac (or less)
- Amps 1-600 A
- IR
  - 200 kA RMS Sym.
  - 100 kA Vdc (KTN-R)

Agency information

- KTN-R
  - UL Listed, Std 248-12, Class RK1, Guide JDDZ, File E4273
  - CSA Certified, Class 1422-02, File 53787
- KTS-R
  - UL Listed, Std 248-12, Class RK1, Guide JDDZ, File E54273
  - CSA Certified, C22.2 No 248.12, Class 1422-02, File 53787
- CE

Features

- Current limitation for non-inductive circuits provides Class RK1 current-limiting response to maximum ground fault and short-circuit conditions
- 200 kA interrupting rating provides high ratings at all circuit locations
- Economical protection for high-fault current circuits

Typical applications

- Panelboards

Catalog no. (amps)			
250 V KTN-R			
KTN-R-1	KTN-R-15	KTN-R-70	KTN-R-200
KTN-R-2	KTN-R-20	KTN-R-75	KTN-R-225
KTN-R-3	KTN-R-25	KTN-R-80	KTN-R-250
KTN-R-4	KTN-R-30	KTN-R-90	KTN-R-300
KTN-R-5	KTN-R-35	KTN-R-100	KTN-R-350
KTN-R-6	KTN-R-40	KTN-R-110	KTN-R-400
KTN-R-8	KTN-R-45	KTN-R-125	KTN-R-450
KTN-R-10	KTN-R-50	KTN-R-150	KTN-R-500
KTN-R-12	KTN-R-60	KTN-R-175	KTN-R-600
600 V KTS-R			
KTS-R-1	KTS-R-12	KTS-R-70	KTS-R-225
KTS-R-2	KTS-R-15	KTS-R-75	KTS-R-250
KTS-R-3	KTS-R-30	KTS-R-80	KTS-R-300
KTS-R-4	KTS-R-35	KTS-R-90	KTS-R-350
KTS-R-5	KTS-R-40	KTS-R-125	KTS-R-400
KTS-R-6	KTS-R-45	KTS-R-150	KTS-R-450
KTS-R-8	KTS-R-50	KTS-R-175	
KTS-R-10	KTS-R-60	KTS-R-200	
KTS-R-20	KTS-R-100	KTS-R-500	
KTS-R-25	KTS-R-110	KTS-R-600	

Recommended blocks for Class RK1 fuses, see page 1-2.

KTN-R Time-current characteristics — average melt

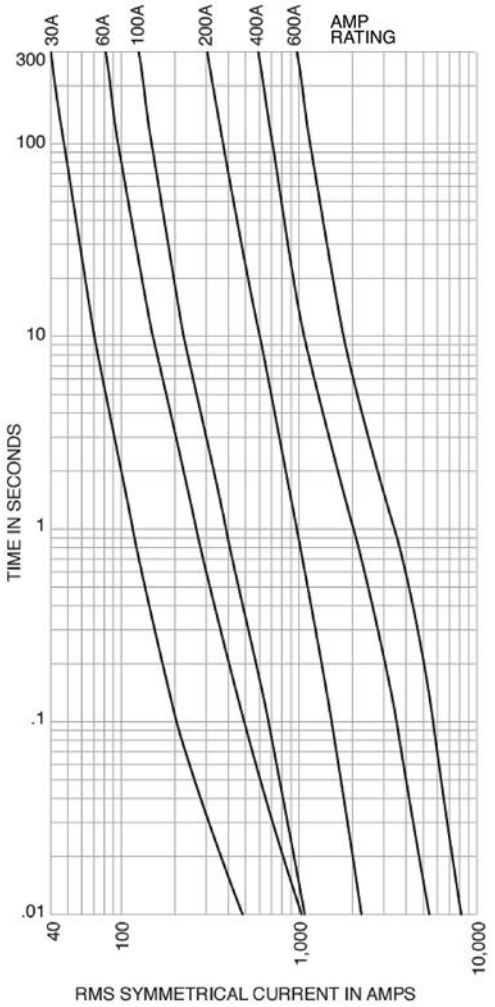

KTS-R Time-current characteristics — average melt

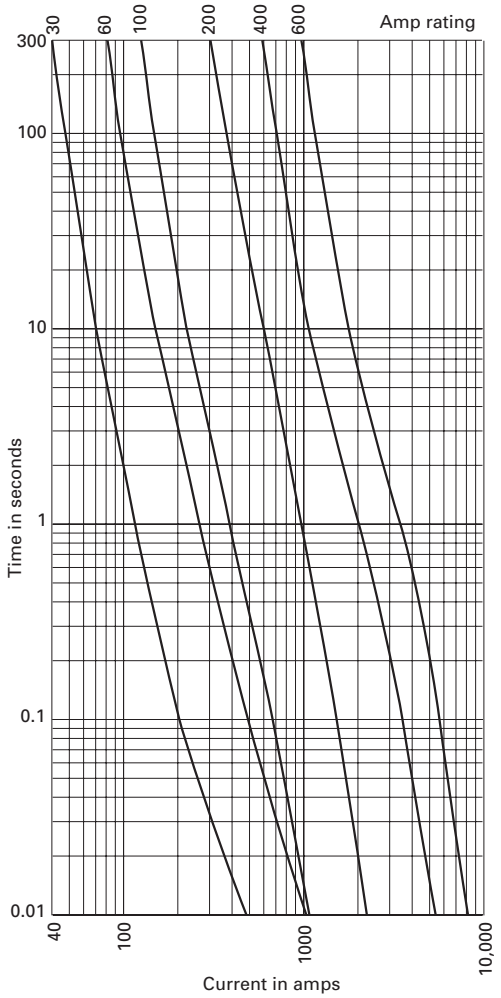

KTN-R Current limitation curves

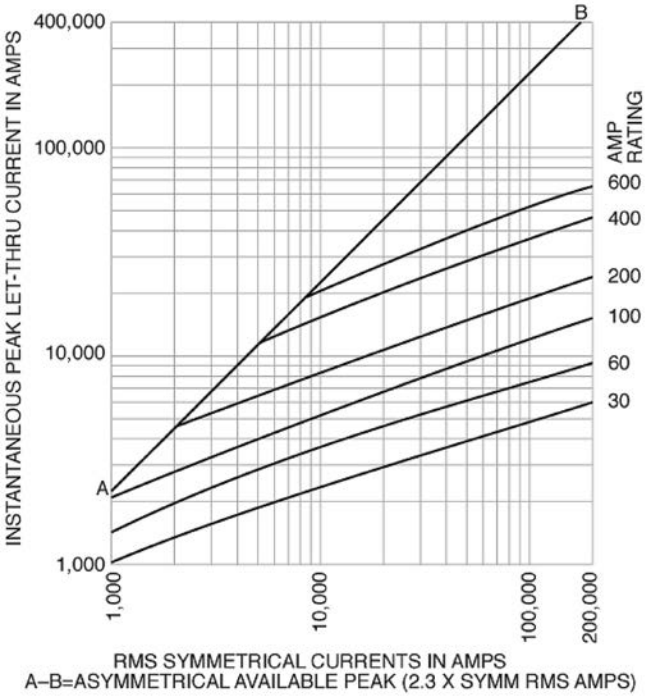

KTS-R Current limitation curves

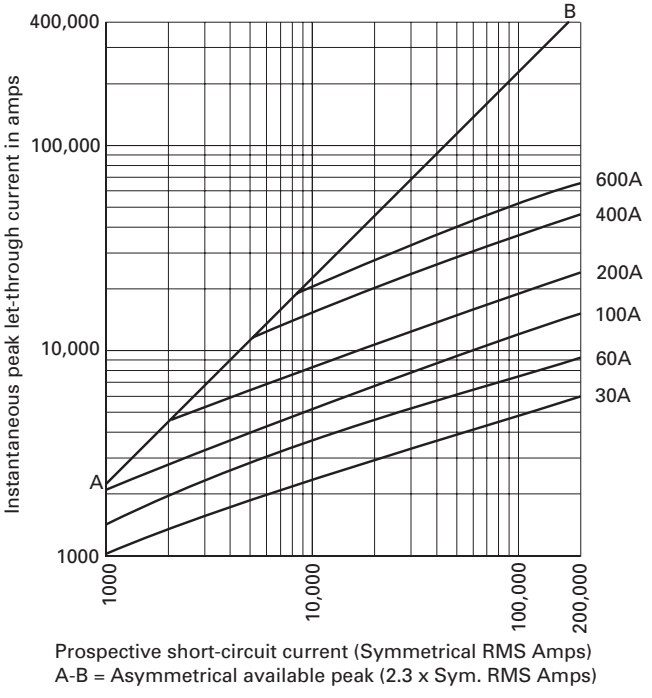

Data sheet no. 1043 (KTN-R), 1044 (KTS-R)

FRN-R (250 V) and FRS-R (600 V) Class RK5 Fusetron™ energy efficient, dual-element, time-delay fuses

Dual-element, time-delay Class RK5 fuses. FRN-R — 10 seconds (minimum) at 500% rated amps (8 seconds for 0-30 A sizes). FRS-R — 10 seconds (minimum) at 500% rated amps. FRN-R and FRS-R available with optional indication on select ratings (see catalog numbers table). For superior electrical protection, Eaton recommends upgrading to Bussmann series Low-Peak LPN-RK (250 V) or LPS-RK (600 V) fuses, see pages 1-24 to 1-26. For dimensions, see page 1-3.

Ratings

- Volts
  - FRN-R
    - 250 Vac (or less)
    - 125 Vdc (1/10-60 A, 110-200 A)
    - 250 Vdc (225-600 A)
  - FRS-R
    - 600 Vac (or less)
    - 300 Vdc 1/10-30 A, 65-600 A
    - 250 Vdc* 35-60 A
- Amps 1/10-600 A
- IR
  - 200 kA RMS Sym.
  - 20 kA DC

* Does not apply to indicating versions.

Agency information

- FRN-R
  - UL Listed, Std 248-12, Class RK5, Guide JDDZ, File E4273
  - CSA Certified, Class 1422-01, File 53787
- FRS-R
  - UL Listed, Std 248-12, Class RK5, Guide JDDZ, File E4273
  - CSA Certified, Class 1422-02, File 53787
- CE

Features

- Separate overload and short-circuit elements provide time-delay for sizing as close as 125% of motor FLA
- 2:1 selective coordination amp ratio (within the Fusetron RK5 fuse family) helps prevent overcurrent events from opening upstream Fusetron fuses
- Insulated end caps for 225-600 A (FRN-R) and 65-600 A (FRS-R) fuses reduces exposure to live parts and extends air gap to distance between blades of adjacent mounted fuses or to housing

Typical applications

- Power panelboards
- Motor control centers
- Combination starters
- Machinery disconnects

Catalog no. (amps)			
250 V FRN-R			
FRN-R-1/10	FRN-R-2	FRN-R-10*	FRN-R-100
FRN-R-1/8	FRN-R-2-1/4	FRN-R-12*	FRN-R-110
FRN-R-15/100	FRN-R-2-1/2	FRN-R-15*	FRN-R-125
FRN-R-2/10	FRN-R-2-8/10	FRN-R-17-1/2*	FRN-R-150
FRN-R-1/4	FRN-R-3	FRN-R-20*	FRN-R-175
FRN-R-3/10	FRN-R-3-2/10	FRN-R-25*	FRN-R-200
FRN-R-4/10	FRN-R-3-1/2	FRN-R-30*	FRN-R-225
FRN-R-1/2	FRN-R-4	FRN-R-35*	FRN-R-250
FRN-R-6/10	FRN-R-4-1/2	FRN-R-40*	FRN-R-300
FRN-R-8/10	FRN-R-5	FRN-R-45*	FRN-R-350
FRN-R-1	FRN-R-5-6/10	FRN-R-50*	FRN-R-400
FRN-R-1-1/8	FRN-R-6	FRN-R-60*	FRN-R-450
FRN-R-1-1/4	FRN-R-6-1/4	FRN-R-70	FRN-R-500
FRN-R-1-4/10	FRN-R-7	FRN-R-75	FRN-R-600
FRN-R-1-1/2	FRN-R-7-1/2	FRN-R-80	
FRN-R-1-6/10	FRN-R-8*	FRN-R-85	
FRN-R-1-8/10	FRN-R-9*	FRN-R-90	
600 V FRS-R			
FRS-R-1/10	FRS-R-2	FRS-R-10*	FRS-R-100
FRS-R-1/8	FRS-R-2-1/4	FRS-R-12*	FRS-R-110
FRS-R-15/100	FRS-R-2-1/2	FRS-R-15*	FRS-R-125
FRS-R-2/10	FRS-R-2-8/10	FRS-R-17-1/2*	FRS-R-150
FRS-R-1/4	FRS-R-3	FRS-R-20*	FRS-R-175
FRS-R-3/10	FRS-R-3-2/10	FRS-R-25*	FRS-R-200
FRS-R-4/10	FRS-R-3-1/2	FRS-R-30*	FRS-R-225
FRS-R-1/2	FRS-R-4	FRS-R-35*	FRS-R-250
FRS-R-6/10	FRS-R-4-1/2	FRS-R-40*	FRS-R-300
FRS-R-8/10	FRS-R-5	FRS-R-45*	FRS-R-350
FRS-R-1	FRS-R-5-6/10	FRS-R-50*	FRS-R-400
FRS-R-1-1/8	FRS-R-6*	FRS-R-60*	FRS-R-450
FRS-R-1-1/4	FRS-R-6-1/4*	FRS-R-65	FRS-R-500
FRS-R-1-4/10	FRS-R-7*	FRS-R-70	FRS-R-600
FRS-R-1-1/2	FRS-R-7-1/2*	FRS-R-75	
FRS-R-1-6/10	FRS-R-8*	FRS-R-80	
FRS-R-1-8/10	FRS-R-9*	FRS-R-90	

* Available with indication To order, place "ID" at the end of the catalog number. Example: FRN-R-30**ID** or FRS-R-7**ID**.

Recommended blocks for Class RK5 fuses, see page 1-2.

Data sheet no. FRN-R; 1019 (up to 60 A), 1020 (70-600 A)
FRS-R 1017 (up to 60 A), 1018 (70-600 A)

FRN-R Time-current characteristics — average melt

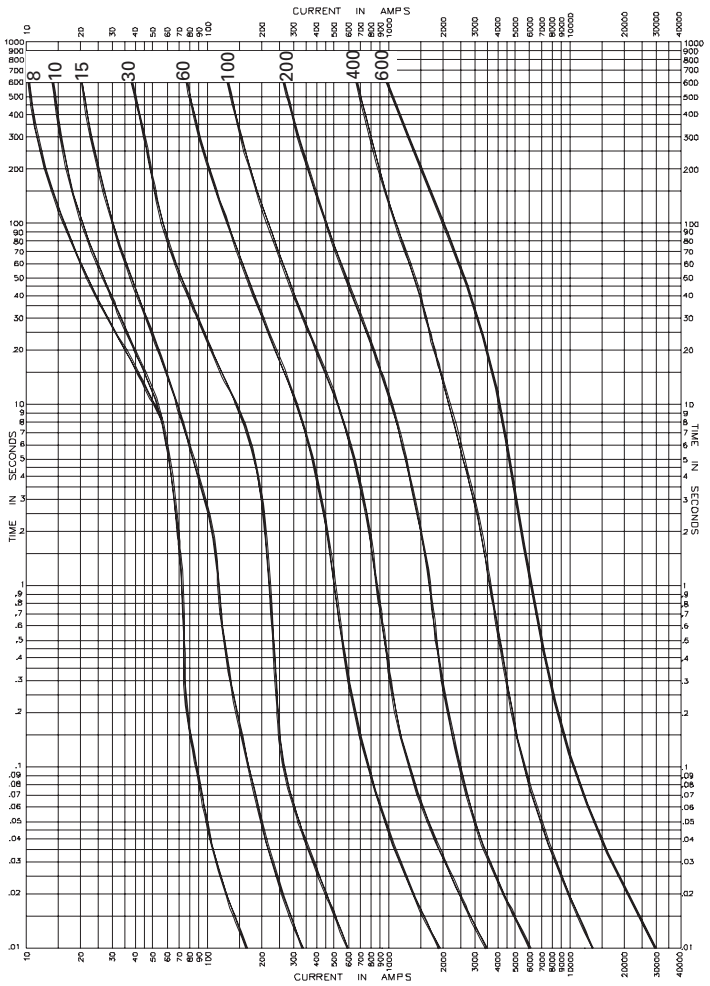

FRS-R Time-current characteristics — average melt

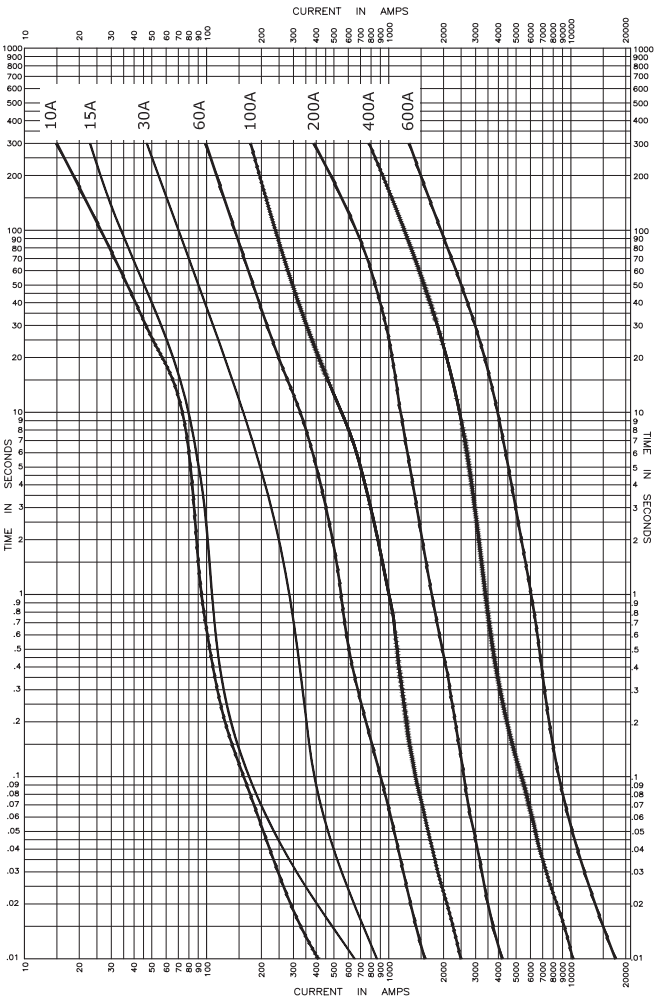

FRN-R Current limitation curves

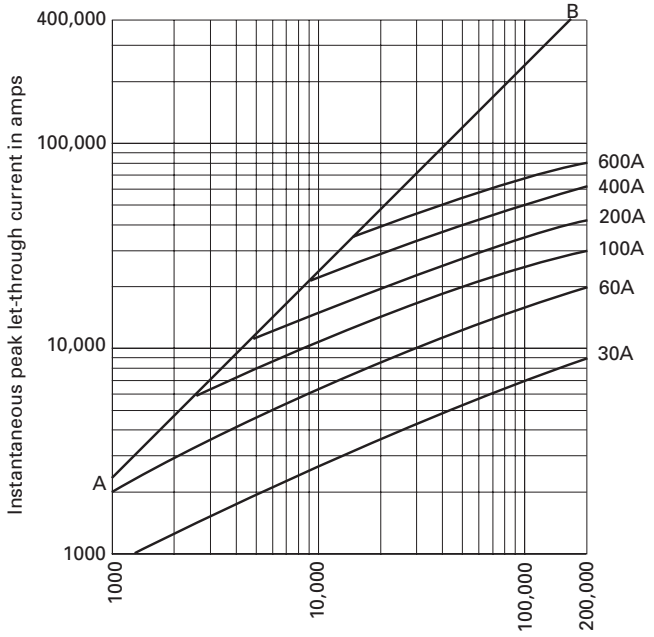

Prospective short-circuit current (Symmetrical RMS Amps)
A-B = Asymmetrical available peak (2.3 x Sym. RMS Amps)

FRS-R Current limitation curves

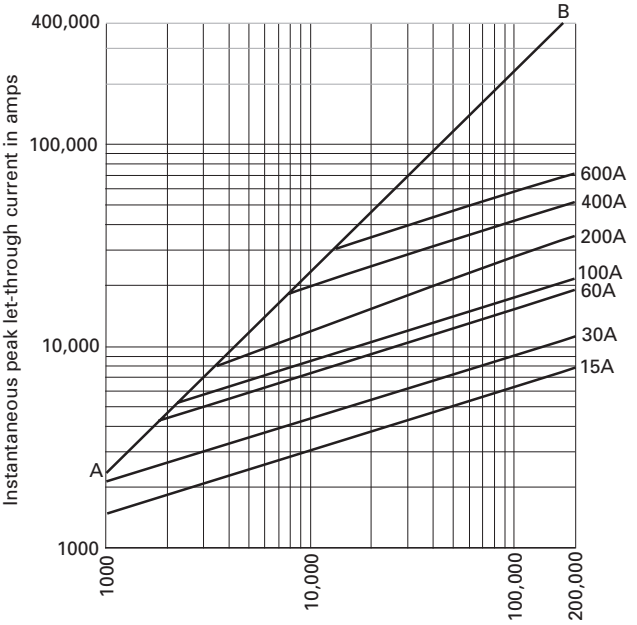

Prospective short-circuit current (Symmetrical RMS Amps)
A-B = Asymmetrical available peak (2.3 x Sym. RMS Amps)

Data sheet no. FRN-R; 1019 (up to 60 A), 1020 (70-600 A)
FRS-R 1017 (up to 60 A), 1018 (70-600 A)

JJN (300 V) and JJS (600 V) Class T Limitron fast-acting fuses

Very fast-acting, current-limiting 300 V (JJN) and 600 V (JJS) Class T fuse. For dimensions, see page 1-4.

Ratings

- Volts
  - JJN
    - 300 Vac (or less)
    - 160 Vdc (15-600 A)
    - 170 Vdc (601-1200 A)
  - JJS 600 Vac (or less)
- Amps
  - JJN 1-1200 A
  - JJS 1-800 A
- IR
  - 200 kA RMS Sym.
  - 20 kA DC @ 160 Vdc (JJN)
  - 100 kA DC @ 170 Vdc (JJN)

Agency information

- UL Listed, Std 248-15, Class T, Guide JDDZ, File E4273, CSA Certified, Class 1422-02, File 53787, RoHS compliant, CE

Features

- Series combination ratings with branch circuit breakers allows broad range of coverage, independent of breaker manufacturer
- Current limitation for non-inductive circuits provides Class T current-limiting response to maximum ground fault and short-circuit conditions
- 200 kA interrupting rating provides protection for virtually all circuit locations
- Small footprint allows more efficient use of panel space

Typical applications

- Large apartment complexes
- Multi-family meter stacks
- VFD line protection

Catalog no. (amps)			
300 V JJN			
JJN-1	JJN-35	JJN-110	JJN-400
JJN-2	JJN-40	JJN-125	JJN-450
JJN-3	JJN-45	JJN-150	JJN-500
JJN-6	JJN-50	JJN-175	JJN-600
JJN-10	JJN-60	JJN-200	JJN-700
JJN-15	JJN-70	JJN-225	JJN-800
JJN-20	JJN-80	JJN-250	JJN-1000
JJN-25	JJN-90	JJN-300	JJN-1200
JJN-30	JJN-100	JJN-350	
600 V JJS			
JJS-1	JJS-30	JJS-90	JJS-250
JJS-2	JJS-35	JJS-100	JJS-300
JJS-3	JJS-40	JJS-110	JJS-350
JJS-6	JJS-45	JJS-125	JJS-400
JJS-10	JJS-50	JJS-150	JJS-450
JJS-15	JJS-60	JJS-175	JJS-500
JJS-20	JJS-70	JJS-200	JJS-600
JJS-25	JJS-80	JJS-225	JJS-800

Recommended blocks for Class T fuses, see page 1-2.

Current-limiting effects

300 V JJN

Prosp. S.C.C.	Let-through current (apparent RMS Sym. vs. fuse rating)								
—	15 A	30 A	60 A	100 A	200 A	400 A	600 A	800 A	1200 A
500	1000	1000	1000	1000	1000	1000	1000	1000	1000
1000	1000	1000	1000	1000	1000	1000	1000	1000	1000
5000	1000	1000	1000	1000	2000	3000	5000	5000	5000
10,000	1000	1000	1000	2000	2000	4000	6000	7000	9000
15,000	1000	1000	1000	2000	3000	4000	6000	9000	10,000
20,000	1000	1000	1000	2000	3000	5000	7000	10,000	11,000
25,000	1000	1000	2000	2000	3000	5000	7000	10,000	12,000
30,000	1000	1000	2000	2000	3000	5000	8000	11,000	13,000
35,000	1000	1000	2000	3000	4000	6000	8000	11,000	13,000
40,000	1000	1000	2000	3000	4000	6000	9000	11,000	13,000
50,000	1000	1000	2000	3000	4000	7000	9000	12,000	15,000
60,000	1000	1000	2000	3000	4000	7000	10,000	13,000	16,000
70,000	1000	1000	2000	3000	5000	7000	10,000	14,000	17,000
80,000	1000	2000	2000	3000	5000	8000	11,000	15,000	17,000
90,000	1000	2000	2000	3000	6000	8000	11,000	15,000	18,000
100,000	1000	2000	2000	4000	6000	8000	12,000	16,000	19,000
150,000	1000	2000	3000	4000	6000	9000	13,000	17,000	22,000
200,000	2000	2000	3000	4000	7000	9000	15,000	19,000	23,000

600 V JJS

Prosp. S.C.C.	Let-through current (apparent RMS Sym. vs. fuse rating)							
—	15A	30A	60A	100A	200A	400A	600A	800A
500	1000	1000	1000	1000	1000	1000	1000	1000
1000	1000	1000	1000	1000	1000	1000	1000	1000
5000	1000	1000	1000	2000	3000	4000	5000	5000
10,000	1000	1000	1000	2000	3000	6000	8000	9000
15,000	1000	1000	2000	3000	4000	7000	10,000	11,000
20,000	1000	1000	2000	3000	4000	7000	10,000	12,000
25,000	1000	1000	2000	3000	5000	7000	11,000	13,000
30,000	1000	1000	2000	3000	5000	8000	12,000	14,000
35,000	1000	1000	2000	3000	5000	9000	13,000	15,000
40,000	1000	2000	2000	4000	5000	9000	13,000	15,000
50,000	1000	2000	2000	4000	6000	10000	14,000	17,000
60,000	1000	2000	3000	4000	6000	10000	16,000	18,000
70,000	1000	2000	3000	4000	7000	11000	17,000	19,000
80,000	1000	2000	3000	4000	7000	11000	17,000	20,000
90,000	1000	2000	3000	4000	7000	12000	18,000	21,000
100,000	2000	2000	3000	5000	7000	12,000	19,000	22,000
150,000	2000	3000	4000	6000	8000	14,000	22,000	25,000
200,000	2000	3000	4000	6000	9000	16,000	24,000	28,000

Data sheet no. 1025 (JJN) and 1029 (JJS)

JJN Time-current characteristics — average melt

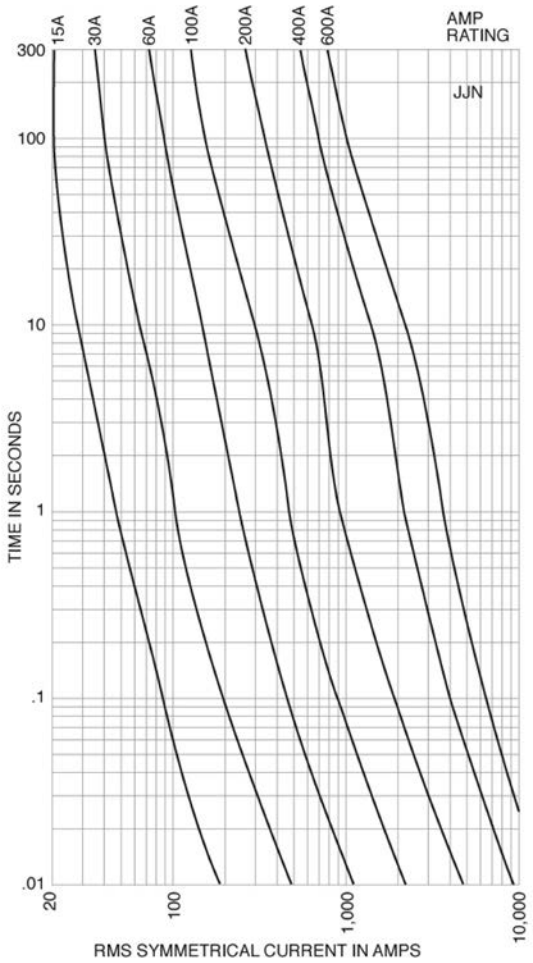

JJS Time-current characteristics — average melt

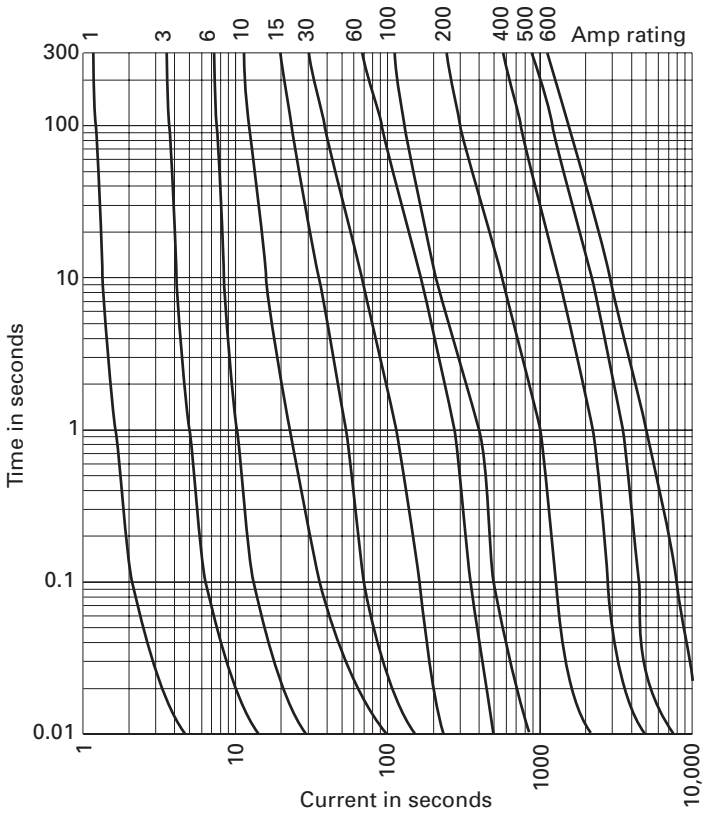

JJN Current limitation curves

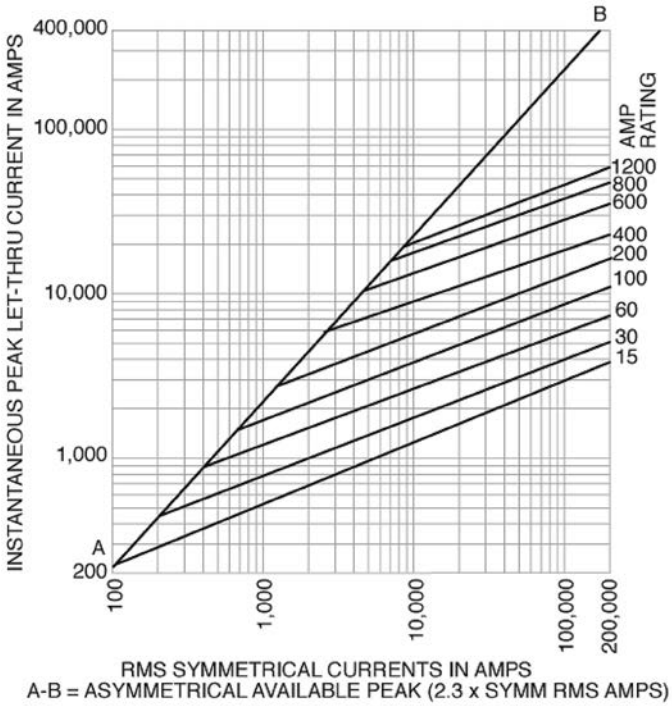

JJS Current limitation curves

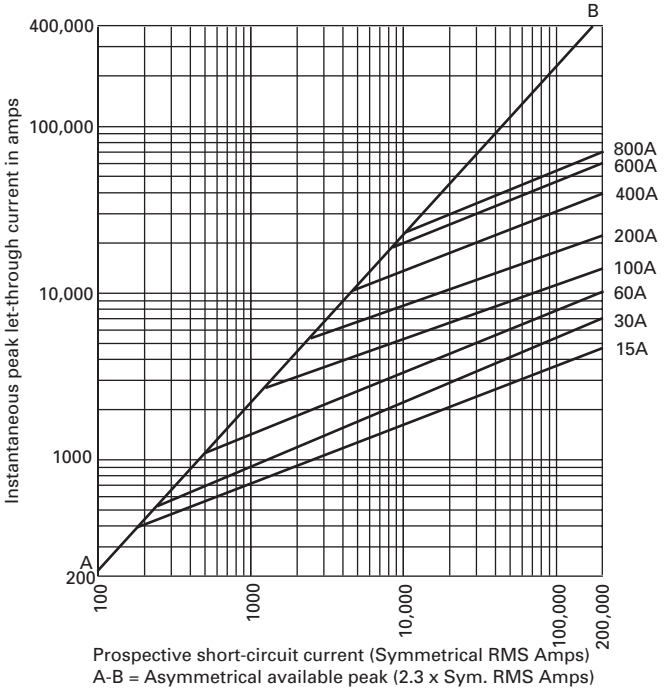

Data sheet no. 1025 (JJN) and 1029 (JJS)

W plug fuses

Fast-acting Edison base plug fuse.

Ratings

- Volts 125 Vac
- Amps 1/2-12 A
- IR 10 kA RMS Sym.

Agency information

- UL Listed, Std 248-11, Guide JEFV, File E12112, CE

Features

- Dependable, fast-acting circuit protection with 10 kA interrupting rating for added safety when applied to existing plug fuse systems and 125 volt single-phase control circuits

Typical applications

- Replacement fuses for existing systems
- For general purpose circuit protection
- Lighting and other non-motor circuits

Catalog no.* (amps)			
W-1/2	W-2-1/2	W-6	W-10
W-1	W-3	W-6-1/2	W-12
W-1-8/10	W-4	W-7	W-DUMMY**
W-2	W-5	W-8	

* W-15 to W-30 plug fuses obsolete. Replace with either T-(amp) or TL-(amp) Edison base plug fuses.
**Non-conductive dummy base NOT a fuse.

Recommended box cover units for W plug fuses, see page 1-36.

SL rejection base and TL Edison base plug fuses

Time-delay, loaded link Edison (TL) and rejection base (SL) plug fuses.

Rating

- Volts 125 Vac
- Amps 15-30 A
- IR 10 kA RMS Sym.

Agency information

- UL Listed, Std 248-11, Guide JEFV, File E12112, CE

Features

- Time-delay loaded link TL Edison base plug fuses pass motor overload starting currents without opening and allow closer sizing to motor load for added protection
- Time-delay loaded link SL fuses provide a rejection feature (when used alone or with Fustat adapters to retrofit Edison base holders) to help prevent overfusing

Typical applications

- Small motor and inductive load circuits with high in-rush current levels
- TL for box cover units to provide small motor overload protection
- SL for applications benefiting from fuse rejection

Catalog no. (amps)			
Rejection base SL			
SL-15	SL-20	SL-25	SL-30
Edison base TL			
TL-15	TL-20	TL-25	TL-30

Recommended box cover units for SL and TL plug fuses, see page 1-36. For Fustat™ Edison base adapters for use with SL fuses see page 1-35.

S rejection base and T Edison base plug fuses

Dual-element, time-delay Edison (T) and rejection base (S) plug fuses.

Rating

- Volts 125 Vac
- Amps
  - S 1/4-30 A
  - T 3/10-30 A
- IR 10 kA RMS Sym.

Agency information

- UL Listed, Std 248-11, Type S and T (0 to 6-1/4) Guide JFHR, File E56412 (7 to 30 A) Guide JEFV, File E12112; CSA Certified, Class 1423-01, File 53787, CE

Features

- T Edison base fuses provide small motor overload protection when used with box cover units
- S rejection base fuses provide a rejection feature (when used alone or with Fustat adapters to retrofit Edison base holders) to prevent overfusing of branch circuits

Typical applications

- S for residential load centers
- T for box cover units to provide small motor overload protection
- Applications benefiting from fuse rejection to help prevent overfusing (S only)

Catalog no. (amps)			
Rejection base S			
S-1/4	S-1-4/10	S-3-1/2	S-20
S-3/10	S-1-6/10	S-4	S-25
S-4/10	S-1-8/10	S-7	S-30
S-1/2	S-2	S-8	
S-6/10	S-2-1/4	S-9	
S-8/10	S-2-1/2	S-10	
S-1	S-2-8/10	S-12	
S-1-1/8	S-3	S-14	
S-1-1/4	S-3-2/10	S-15	
Edison base T			
T-3/10	T-1-6/10	T-4	T-10
T-4/10	T-1-8/10	T-4-1/2	T-12
T-1/2	T-2	T-5	T-14
T-6/10	T-2-1/4	T-5-6/10	T-15
T-8/10	T-2-1/2	T-6	T-20
T-1	T-2-8/10	T-6-1/4	T-25
T-1-1/8	T-3	T-7	T-30
T-1-1/4	T-3-2/10	T-8	
T-1-4/10	T-3-1/2	T-9	

Recommended box cover units for S and T plug fuses, see page 1-36. For Fustat Edison base adapters for use with SL fuses see page 1-35.

Data sheet no. 1032 (S) and 1034 (T)

P and TC CSA plug fuses

CSA Edison base Type P (P) dual-element fuses and Type D (TC) dual-element, time-delay fuses.

Ratings

- Volts 125 Vac or less
- Amps 15-30 A
- IR 10 kA

Agency information

- P - CSA Certified
- TC - CSA Certified, Class 1423-01, File 53787

Features

- P
  - "P" rating addresses the need of Canadian applications
  - Non-time delay protects non-inductive loads
- TC
  - "D" rating addresses the need of Canadian applications
  - Heavy duty TC fuses are industrial strength products, featuring dual-element construction
  - This spring loaded design provides superior short-circuit and overload protection
  - The TC fuses have more time-delay than the medium duty fuses in order to better protect industrial motors and residential circuits

Typical applications

- P for non-inductive loads, residential load centers
- TC for box cover units to provide small motor overload protection

Catalog no. (amps)			
Type P			
P-15	P-20	P-25	P-30
Type D			
TC-15	TC-20	TC-25	TC-30

Recommended box cover units for P and TC plug fuses, see page 1-36.

Data sheet no. 1039 (TC)

MB Edison base circuit breakers

Edison base manual reset circuit breakers.

Ratings

- Volts 125 Vac only
- Amps 15 and 20 A
- IR 10 kA RMS Sym.

Agency information

- UL Listed, File E14942

Features

- Edison base circuit breakers fit standard Edison base fuse sockets to provide resettable overcurrent protection (correct cause of overcurrent event before resetting)

Typical applications*

- Replacing Edison base plug fuses in residential fuse panels

Catalog no.* (amps)	
MB-15	MB-20

* Not for use in box cover units or for inductive loads.

SA Fustat fuse adapters

Adapters for using Type S and SL rejection base fuses in Edison base fuse sockets. Amp rating rejection feature helps prevent overfusing.

Ratings

- Volts 125 Vac
- Amps 1-30 A

Agency information

- UL Listed, File E12853, CSA Certified, Class 6225-01, File 47235

Features

- Fustat adapters screw into the "Edison" thread fuse sockets to easy retrofit existing fuse installations to rejection base fuses
- Available in various amp ratings to cover a wide range of rating requirements to help prevent overfusing

Typical applications

- Plug fuse installations where it is desirable to restrict fuse amp ratings and help prevent overfusing

Catalog no.	Accepts S fuses	Accepts SL fuses
SA-1*	S-1 or smaller	—
SA-1-1/4*	S-1-1/4 or smaller	—
SA-1-6/10*	S-1-6/10 or smaller	—
SA-2*	S-2 or S-1-8/10	—
SA-2-1/2*	S-2-1/2 to S-1-8/10	—
SA-3-2/10*	S-3-2/10 to S-1-8/10	—
SA-4*	S-4 to S-3-1/2	—
SA-5*	S-5 to S-3-1/2	—
SA-6-1/4*	S-6-1/4 to S-3-1/2	—
SA-8*	S-8 to S-7	—
SA-10*	S-10 to S-7	—
SA-15**	S-15 to S-7	SL-15
SA-20**	S-20	SL-20
SA-30**	S-30 to S-25	SL-52, SL-30

* Single motor circuits - both running and short-circuit protection.
**Branch circuits.

Box cover units for Edison base plug fuses

SOU, SRU, SSU, SOW, SRW, SSW, SOX, SRX, SOY, SRY, SSY, SSY-RL, STY, SCY, SOY-B and SSN

Box cover units for standard electrical boxes provide supplemental fuse protection for small motor circuits and other loads requiring overcurrent protection below that of the branch circuit overcurrent protective device. Versions are available for a fused outlet, switch or plain circuit that fit standard sized electrical boxes. See catalog numbers for available configurations by box type.

Use with SA adaptors and S or SL Type fuses may prevent fuse cover from closing. Not recommended for use with MB-15 Edison base circuit breaker.

SOU SRU SSU SSN

Ratings

- Volts 125 V
- Amps 15 A

Agency information

- UL Listed, Guide JAMZ, File IE6491
- CSA Class 6225-01, File 47235

Features

- A low-cost method of controlling and protecting small motors when used with Bussmann series Type T dual-element fuses
- Low-cost supplemental protection and disconnection of 125 V or less, single-phase circuits

Typical applications

- Fractional horsepower, 125 volt single-phase motor circuits
- General 125 volt supplemental circuits

2-1/4" handy box units

SOU SRU SSU

4" square box units

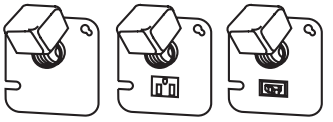

SOY SRY SSY

2-3/4" switch box units

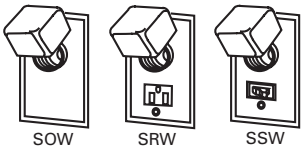

SOW SRW SSW

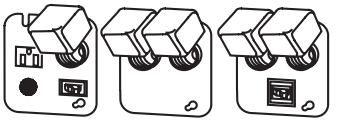

SSY-RL SOY-B STY

4" octagon box units

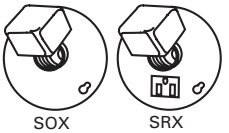

SOX SRX

SCY

Catalog no.	Box type	Fuse sockets	Switch control[1]	Pilot light[2]	Max motor size (Hp)	Description	Agency information
SOU	2-1/4" Handy	1			3/4	Fuse receptacle only (no switch or outlet)	UL, CSA
SRU		1			1/2	Fused outlet	UL
SSU		1	X		1/2	Fused switch	UL, CSA
SOW	2-3/4" Switch	1			3/4	Fuse receptacle only (no switch or outlet)	UL, CSA
SRW		1			1/2	Fused outlet	UL
SSW		1	X		1/2	Fused switch	UL, CSA
SOX	4" Octagon	1			3/4	Fuse receptacle only (no switch or outlet)	UL, CSA
SRX		1			1/2	Fused outlet	UL
SOY	4" Square	1			3/4	Fuse receptacle only (no switch or outlet)	UL, CSA
SRY		1			1/2	Fused outlet	UL
SSY		1	X		1/2	Fused switch	UL, CSA
SSY-RL		1	X	X	1/2	Fused switch/outlet with pilot light	—
STY[3]		2	X		1/2	Fused double pole switch, dual fuse receptacles	UL
SCY[4]		2			1/2	Dual fused switches	UL
SOY-B		2			3/4	Dual fuse receptacles only (no switch or outlet)	UL
SSN	Single gang	1	X		1/2	Weatherproof fused switch	UL

1 Switch turns power to fused load OFF or ON.
2 Pilot light indicates power to load (dark when switch OFF or fuse open).
3 Double pole switch opens both sides of circuit.
4 Can be used for two separate motors with common switch or a single motor (3/4 Hp, 250 Vac max).

Data sheet no. 1129

Bussmann series Fuses Made Simple™ - Control Circuits

The easiest and fastest way to select and specify the right control circuit fuse

Contents

Description		Section page
Fuse holder and block selection guide		**2**
Product	**Catalog symbol**	
Limiters		
Cable limiters	K (600 V)	3
	UH (250 V)	
Welder limiters	64000 (600 V) 68000 (600 V)	
Bolt-on	ANN (125 V very fast-acting)	4
	ANL (80 V non time-delay)	
	4164 and 4164-FR blocks	
Supplemental fuses		
13/32" x 1-1/2" fast-acting	BAF (250 V)	5
	KTK (600 V)	
	KLM (600 V)	6
13/32" x 1-1/2" time-delay	FNM (250 V)	
	FNQ (500 V)	7
13/32" x 1-3/8" fast-acting	BBS (600 V)	
Pin indication and actuator	GBA (125 V)	8
	GLD (125 V)	
	MIC (250 V fast-acting)	
	FNA 250 V time-delay)	9
	MIS (600 V)	
	KAZ (600 V)	
In-line fuses		
size rejecting	GLQ	10
	GMQ	
size rejecting holder	HLQ	
Non size-rejecting fuses and holders	GLR	11
	GMF	
	GRF	
Non size-rejecting fuse holders	HLR	
	HLR-2A	
Blade fuses and holders		
Fuses	ATR micro	12
	ATM ATM-_ID ATM-LP	
	ATC ATC-_ID	13
	MAX MAX-_ID	
In-line fuse holders	HH2 (ATR)	14
	ATC-FHID (ATC) HHC (ATC) HHD (ATC) HHF (ATC) HHG (ATC) HHR (ATC) HHS (ATC)	
	ATM-FHID (ATM) HHL (ATM) HHM (ATM) HHU (ATM)	
	HHX (MAX)) MAX-FHID (MAX))	
PCB fuseclips		
ATC	1A5600 1A5780	
ATM	1A5778 1A5779	

Fuse holder and block selection guide

Catalog pages for the blocks and holders are denoted parenthetically "()" next to their catalog symbol.

Fuse	Catalog symbol	Blocks	DIN-Rail holders	Panel mount holders	In-line holders	PCB fuseclips
Cable limiters	K_	—	—	—	—	—
	UH_	—	—	—	—	—
Welder limiters	64000 68000	RM60_ (8-21)	—	—	—	—
Bolt-on limiters	ANN ANL	4164 (2-4) 4164-FR (2-4)	—	—	—	—
13/32" x 1-1/2" supplemental fuses	BAF FNM FNQ KLM KTK	BMM603_ (8-6) 3743 (8-14) 4421 (8-14) 4515 (8-14)	CCP2-_ (11-2) OPM-1038_ (8-12) OPM-NG_ (8-13) CHM (8-8) NDNF1-WH (8-11)	CCPLP†† (30 A) (11-32) HPC-D (8-43) HPD (8-44) HPF (8-43) HPG (8-44) HPM (8-44) HPM-D (8-44) HPS2 (8-45) HPS (8-45)	HEB (8-51) HEX (8-53)	1A3400_ (3-16) 5960 (3-16)
13/32" x 1-3/8" supplemental fuses	BBS	BMM603_ (8-6)	—	HPS-L (8-45)	HEH (8-49)	1A3400_ (3-16) 5960 (3-16)
Pin indication fuses and actuator	GBA GLD	—	—	HLD (8-43)	—	1A1119 (3-15) 1A1120 (3-15) 1A1907 (3-15) 1A3398 (3-15) 1A4533 (3-15) 1A4534 (3-15) 5681 (3-16) 5682 (3-16)
	MIC FNA	BMM603_ (8-6) 3839†	—	HPF-C (8-43)	—	1A3400_ (3-16) 5960 (3-16)
	MIS fuse KAZ actuator	2778† 2837† 2838†	—	—	—	1A3400_ (3-16) 5960 (3-16)
In-line size rejecting fuses	GLQ GMQ	—	—	—	HLQ (2-10)	—
In-line non-rejecting fuses	GLR GMF GRF	—	—	—	HLR (2-11) HLR-2A (2-11)	—
Automotive blade-type fuses	ATC ATC-_ID	FB_-ATC* 15600*	—	—	ATC-FHID (2-14) HHC (2-14) HHD (2-14) HHF (2-14) HHG (2-14) HHR (2-14) HHS (2-14)	1A5600 (2-14) 1A5780 (2-14)
	ATM ATM-_ID	FB_-ATM* RTMF-_*	—	—	ATM-FHID (2-14) HHL (2-14) HHM (2-14) HHU (2-14)	1A5778 (2-14) 1A5779 (2-14)
	ATM-LP	FB_-ATM* RTMF-_*	—	—	HHV (2-14)	—
	ATR micro	FB_-ATR*	—	—	HH2 (2-14)	—
	MAX MAX-_ID				HHX (2-14) MAX-FHID (2-14)	

* Not shown in this catalog, for details and available configurations, see Automotive and Home center catalog no. 5084.
† Not shown in this catalog, see data sheet for details.
†† UL 508 Listed disconnect switch, available in 1-, 2- and 3-pole versions.

K 600 V cable limiters

Cable limiters for protecting 600 V low voltage distribution and service entrance cables against short-circuit currents.

Ratings

- Volts 600 Vac
- IR 200 kA RMS Sym. @ 600 Vac

Agency information

- UL Listed, File E90818, 600 Vac, 200 kA IR on catalog numbers CDA-W, CDB-W, KCD, KCJ, KCM, KCM-B, KCR, KDD, KDF, KDJ, KDM, KDP, KDR, KDU, KEW, KFM, KFT, KHF, KHJ, KHM, KHR

Features

- Sizes and ratings available to meet many applications

Catalog no.	Cable size (AWG)	Catalog no.	Cable size (AWG)
***Tubular terminals**			
KCY	4	KCH	250 kcmil
KCZ	3	KCJ[1, 2]	350 kcmil
KCA	2	KCM[1, 2, 3]	500 kcmil
KCB	1	KCV	600 kcmil
KCC	1/0	KCR[1, 2]	750 kcmil
KCD[1, 2]	2/0	CDA-W[1, 4]	750 kcmil
KCE	3/0	KCS	1000 kcmil
KCF	4/0		
***Tubular and offset bolt-type terminals**			
KQV	12	KDE	3/0
KQT	10	KDF[1]	4/0
KFZ	8	KDH	250 kcmil
KIG	6	KDJ[1, 3]	350 kcmil
KDY	4	KDM[1, 3]	500 kcmil
KDA	2	KDU[1]	600 kcmil
KDB	1	KDR[1, 2]	750 kcmil
KDC	1/0	CDB-W[1, 4]	750 kcmil
KDD[1]	2/0		
***Compression connector rod and tubular terminals**			
KEX	4/0	KQO	350 kcmil
KFH-A	250 kcmil	KDT	500 kcmil
****Center bolt-type and off-set bolt-type terminals**			
KPF	4/0	KDP[1]	500 kcmil
KFT[1]	250 kcmil	KFM[1]	750 kcmil
KEW[1]	350 kcmil		
Center bolt-type and tubular terminals			
KHF[1]	4/0	KHM[1]	500 kcmil
KHJ[1]	350 kcmil	KHR[1]	750 kcmil

* Copper conductors only.
** Copper or aluminum conductors.
1 UL Listed (File E90818), 600 Vac, 200 kA I.R.
2 Available with shrink tube "-V" suffix.
3 Available with molded rubber boots.
4 Aluminum conductor only.

Accessory boots (order separately)

Limiter	Boot catalog no.	Limiter	Boot catalog no.
KCM	BOOT-KCM	KDM	BOOT-KDM

Recommended Thomas and Betts crimp tool TBM-14M with die 15506 KDM/15515 KDR for installation.

Data sheet no. 1042

UH 250 V cable limiters

Cable limiters for protecting 250 V low voltage distribution and service entrance cables used in residential applications against short-circuit currents.

Ratings

- Volts Up to 250 Vac
- IR 100 kA RMS Sym.

Terminals and conductors

- Center bolt-to-offset bolt terminals, Cu or Al conductors
- Cu or Al conductors are permitted per the listed cable size. Select the catalog number for the conductor size. See data sheet 1042 for dimensions.

Catalog no.	Cu cable size (AWG)	Al cable size (AWG)
UHA	3/0	4/0
UHJ-M	3/0	250 kcmil
UHJ-T	350 kcmil	500 kcmil
UHJ-W	600 kcmil	800 kcmil

Data sheet no. 1042

64000 and 68000 600 V welder limiters

Limiters for use on welder circuits. **Note**: welder limiters have special characteristics and are not suitable for use on other circuit types.

Ratings

- Volts 600 Vac (or less)
- IR 200 kA RMS Sym.

Features

- Current-limiting devices designed specially for use only on welder circuits
- Time-current characteristics are designed to hold on the intermittent overloading encountered in welder operation, while providing short-circuit protection to the circuit and equipment

Catalog no.	Fuse holder type	Nominal amp rating
68300	Class H	300
68600	Class H	600
64200	Class J	200
64300	Class J	300

Recommended fuse blocks, see page 2-2.

Data sheet no. 1045

ANL/ANN limiters

Circuit limiters typically used in fork lifts, marine, aviation and battery charging systems. ANL limiters are fast-acting and ANN limiters are very fast-acting. Both ANL and ANN limiters measure 7/8" x 3-3/16" (22x81mm) with a depth that varies by amp rating.

Fast-acting ANL

Very fast-acting ANN

Ratings

- Volts
  - ANL 80 Vdc
  - ANN 125 Vac, 80 Vdc
- Amps
  - ANL 35-750 A
  - ANN 10-800 A
- IR
  - ANL 2700 A @ 80 Vdc
  - ANN 2500 A @ 125 Vac, 2700 A @ 80 Vdc

Agency information

- ANL: UL Recognized, CSA Certified, 35-750 A @ 80 Vdc, IR 2700 A, Guide JFHR2, File E56412, Class 1422-30, File 53787, SAE J1171
- ANN: UL Recognized, CSA Certified 35-400 A @ 125 Vac, IR 2500 A and 500 A @ 80 Vdc, IR 2700 A, Guide JFHR2, File E56412, Class 1422-30, File 53787, CE for 35-400 A

Catalog no. (amps)			
Fast-acting ANL			
ANL-35	ANL-125	ANL-250	ANL-500
ANL-40	ANL-130	ANL-275	ANL-600
ANL-50	ANL-150	ANL-300	ANL-675
ANL-60	ANL-175	ANL-325	ANL-750
ANL-80	ANL-200	ANL-350	
ANL-100	ANL-225	ANL-400	
Very fast-acting ANN			
ANN-10	ANN-90	ANN-225	ANN-400
ANN-35	ANN-100	ANN-250	ANN-500
ANN-40	ANN-125	ANN-275	ANN-600
ANN-50	ANN-150	ANN-300	ANN-700
ANN-60	ANN-175	ANN-325	ANN-800
ANN-80	ANN-200	ANN-350	

Features

- Fast-acting sizing for inductive circuits (ANL)
- Very fast-acting circuit protection (ANN)
- Element viewing window shows limiter status at a glance

Data sheet no. 2023 (ANN), 2024 (ANL)

4164 and 4164-FR limiter blocks

Limiter fuse blocks for ANL and ANN. 4164 is furnished with nylon inserted locknuts and 4164-FR is furnished with standard hex nuts.

4164

4164-FR

Dimensions

- L 3.38" x W 0.95" x H 1.62"
- Studs center-to-center 2.43"

Ratings

- Volts 125 Vac, 80 Vdc, 32 Vdc (self certified)
- Amps 10-800 A
- Poles single, stud terminal

Data sheet no. 2133

BAF fast-acting 13/32" x 1-1/2" supplemental fuse

Fast-acting, supplemental fuse. Green color code (250 Vac max). For superior protection, Eaton recommends upgrading to Bussmann series Low-Peak Class CC fuses. See data sheet no. 1023.

Ratings

Fuse amp range	IR at system voltage		Agency information	
	250 Vac	125 Vac	UL	CSA
1/4 to 1	35 A	10 kA	—	X
1-1/2 to 2-1/2	100 A	10 kA	—	X
3	100 A	10 kA	X	X
4 to 10	200 A	10 kA	X	X
12 to 15	750 A	10 kA	X	X
20 to 30	200 A	10 kA	—	—

Agency information

- UL Listed, Std. 248-14, 250 Vac (3 to 15 A) Guide JDYX, File E19180, CSA Certified, 250 Vac (1/4 to 15 A) Class 1422-01, File 53787

Catalog no. (amps)			
BAF-1/4	BAF-1-8/10	BAF-6	BAF-12
BAF-1/2	BAF-2	BAF-6-1/4	BAF-15
BAF-6/10	BAF-2-1/2	BAF-7	BAF-20
BAF-8/10	BAF-3	BAF-8	BAF-25
BAF-1	BAF-4	BAF-9	BAF-30
BAF-1-1/2	BAF-5	BAF-10	

Features

- Green color code for maximum 250 Vac rating
- Fiber tube construction with nickel-plated brass endcaps

Typical applications

- General purpose circuits
- Lighting circuit protection
- Meter circuits

Recommended blocks and holders for 13/32" x 1-1/2" fuses, see page 2-2.

KTK fast-acting 13/32" x 1-1/2"supplemental fuse

Fast-acting supplemental fuse. Black color code (600 Vac max). For superior protection, Eaton recommends upgrading to Bussmann series Low-Peak Class CC fuses. See data sheet no. 1023.

RoHS 2011/65/EU

Ratings

Fuse amp range	IR at rated voltage	Agency information	
	600 Vac	UL	CSA
1/10 to 30	100 kA	X	X

Agency information

- UL Listed, Std. 248-14, Guide JDYX, File E19180, CSA Certified, C22.2 No. 248.14, Class 1422-01, File 53787, HRC-MISC, RoHS compliant, CE

Catalog no. (amps)			
KTK-1/10	KTK-3/4	KTK-4	KTK-12
KTK-1/8	KTK-1	KTK-5	KTK-15
KTK-2/10	KTK-1-1/4	KTK-6	KTK-20
KTK-1/4	KTK-1-1/2	KTK-7	KTK-25
KTK-3/10	KTK-2	KTK-7-1/2	KTK-30
KTK-4/10	KTK-2-1/2	KTK-8	
KTK-1/2	KTK-3	KTK-9	
KTK-6/10	KTK-3-1/2	KTK-10	

Features

- Black color code for 600 Vac rating
- Fast-acting for resistive loads
- Melamine tube construction with nickel-plated bronze endcaps

Typical applications

- Control circuits
- Lighting circuit protection
- Meter circuits

Recommended blocks and holders for 13/32" x 1-1/2" fuses, see page 2-2.

KLM fast-acting 13/32" x 1-1/2" supplemental fuse

Fast-acting supplemental fuse. Color code black (600 Vac/dc max). For superior protection, Eaton recommends upgrading to Bussmann series Low-Peak Class CC fuses. See data sheet no. 1023. For protecting PV systems, use PVM 10x30mm PV fuses. See data sheet no. 10121.

RoHS 2011/65/EU

Ratings

Fuse amp range	IR at rated voltage		Agency information	
	600 Vac	600 Vdc	UL	CSA
1/10 to 30	100 kA	50 kA	X	X

Electrical characteristics

% of amp rating	Opening time
110%	4 hours minimum
135%	AC opens within 1 hour

Agency information

- UL Listed, Std. 248-14, Guide JDYX, File E19180, CSA Certified, C22.2 No. 248. 14, Class 1422-01, File 53787, RoHS compliant, CE

Catalog no. (amps)			
KLM-1/10	KLM-1	KLM-5	KLM-15
KLM-1/8	KLM-1-1/4	KLM-6	KLM-20
KLM-2/10	KLM-1-1/2	KLM-7	KLM-25
KLM-1/4	KLM-2	KLM-8	KLM-30
KLM-3/10	KLM-2-1/2	KLM-9	
KLM-1/2	KLM-3	KLM-10	
KLM-3/4	KLM-4	KLM-12	

Features

- Color coded for 600 Vac/dc maximum
- A full range DC performance fuse
- Melamine tube construction with nickel-plated brass endcaps

Recommended fuse blocks and holders for 13/32" x 1-1/2" fuses, see page 2-2.

Data sheet no. 2020

FNM time-delay 13/32" x 1-1/2" supplemental fuse

Time-delay supplemental fuse. Color code green (250 Vac max). For superior protection, Eaton recommends upgrading to Bussmann series Low-Peak Class CC fuses. See data sheet no. 1023.

RoHS 2011/65/EU

Ratings

Fuse amp range	IR at system voltage		Agency information	
	250 Vac	125 Vac	UL	CSA
1/10 to 1	35 A	10 kA	X	X
1-1/8 to 3-1/2	100 A	10 kA	X	X
4 to 10	200 A	10 kA	X	X
12 to 30	10 kA	—	X	X

Agency information

- UL Listed, Std. 248-14, Guide JDYX; File E19180, CSA Certified, Class 1422-01, File 53787, RoHS compliant, CE

Catalog no. (amps)			
FNM-1/10	FNM-8/10	FNM-2-1/2	FNM-6-1/4
FNM-1/8	FNM-1	FNM-2-8/10	FNM-7
FNM-15/100	FNM-1-1/8	FNM-3	FNM-8
FNM-2/10	FNM-1-1/4	FNM-3-2/10	FNM-9
FNM-1/4	FNM-1-4/10	FNM-3-1/2	FNM-10
FNM-3/10	FNM-1-1/2	FNM-4	FNM-12
FNM-4/10	FNM-1-6/10	FNM-4-1/2	FNM-15
FNM-1/2	FNM-1-8/10	FNM-5	FNM-20
FNM-6/10	FNM-2	FNM-5-6/10	FNM-25
FNM-3/4	FNM-2-1/4	FNM-6	FNM-30

Features

- Color coded for 250 Vac maximum
- Melamine tube construction with nickel-plated brass endcaps

Typical applications

- Circuits with high inrush currents (motor/transformer loads)
- Supplemental protection for 125 Vac and 250 Vac inductive circuits

Recommended fuse blocks and holders for 13/32" x 1-1/2" fuses, see page 2-2.

Data sheet no. 2028

FNQ time-delay 13/32" x 1-1/2" supplemental fuse

Time-delay supplemental fuse. Color code orange (500 Vac max). For superior protection, Eaton recommends upgrading to Bussmann series Limitron FNQ-R Class CC fuses. See data sheet no. 1014.

Ratings

Fuse amp range	IR at rated voltage	Agency information	
	500 Vac	UL	CSA
1/10 to 30	10 kA	X	X

Agency information

- UL Listed, Std. 248-14, Guide JDYX, File E19180, CSA Certified, C22.2 No. 248.14, Class 1422-01, File 53787, HRC-MISC, RoHS compliant, CE

Catalog no. (amps)			
FNQ-1/10	FNQ-8/10	FNQ-3-2/10	FNQ-9
FNQ-1/8*	FNQ-1	FNQ-3-1/2	FNQ-10
FNQ-15/100*	FNQ-1-1/8	FNQ-4	FNQ-12
FNQ-3/16	FNQ-1-1/4	FNQ-4-1/2	FNQ-14
FNQ-2/10	FNQ-1-1/2	FNQ-5	FNQ-15
FNQ-1/4	FNQ-1-6/10	FNQ-5-6/10	FNQ-20
FNQ-3/10	FNQ-2	FNQ-6	FNQ-25
FNQ-4/10	FNQ-2-1/4	FNQ-6-1/4	FNQ-30
FNQ-1/2	FNQ-2-1/2	FNQ-7	
FNQ-6/10	FNQ-3	FNQ-8	

* Not RoHS compliant.

Features

- Color coded for 500 Vac maximum
- Fiber tube construction with nickel-plated brass endcaps

Typical applications

- Motor control transformers
- Circuits with in-rush currents

Recommended blocks and holders for 13/32" x 1-1/2" fuses, see page 2-2.

BBS fast-acting 13/32" x 1-3/8" supplemental fuse

Fast-acting supplemental fuse. Color codes black (600 Vac max 1/10 to 6 A), green (250 Vac max 7 to 10 A), purple (48 Vac max 12 to 30 A). (For superior protection, Eaton recommends upgrading to Bussmann series Low-Peak Class CC fuses. See data sheet no. 1023.

Ratings

Fuse amp range	IR at system voltage			Agency information	
	600 Vac	250 Vac	48 Vac	UL	CSA
1/10 to 6	10 kA	—	—	X	X
7 to 10	—	10 kA	—	X	X
12 to 30*	—	—	—	—	—

* For interrupting rating, contact factory.

Agency information

- UL Listed, Std. 248-14 (1/10-6 A@600 Vac, 7-10 A@250 Vac), Guide JDYX, File E19180, CSA Certified, C22.2 No. 248.14 (1/10-6 A@600 Vac, 7-10 A@250 Vac), Class 1422-01, File 53787, CE

Catalog no. (amps)			
BBS-1/10	BBS-8/10	BBS-4	BBS-15
BBS-2/10	BBS-1	BBS-5	BBS-20
BBS-1/4	BBS-1-1/2	BBS-6	BBS-25
BBS-4/10	BBS-1-6/10	BBS-7	BBS-30
BBS-1/2	BBS-1-8/10	BBS-8	
BBS-6/10	BBS-2	BBS-10	
BBS-3/4	BBS-3	BBS-12	

Features

- Color coded for 600 Vac (black) 250 Vac (green) and 48 Vac (purple) for maximum
- Fiber tube construction with nickel-plated brass endcaps

Typical applications

- Control circuits
- Gaseous vapor fixtures
- HID ballasts
- Electronic circuits
- Hand-held meters

Recommended blocks and holders for BBS fuses, see page 2-2.

GBA/GLD fast-acting 1/4" x 1-1/4" pin-indicating supplemental fuse

Fast-acting, pin-indicating fuse.

Ratings

- Volts — see agency information
- Amps 1/2-15 A
- IR — see agency information

Agency information

- UL Listed, Std. 248-14, 0-5 A/125 Vac, 10,000 AIC, Guide JDYX, File E19180
- UL Recognized, 6 A/125 Vac, 1000 AIC 8-15 A/50 Vac/dc, 300 AIC Guide JDYX2, File E19180
- CSA Certified, 0-5 A/125 Vac, 10,000 AIC Class 1422-01, File 53787
- CE

Catalog no. (amps)			
GBA			
GBA-1/2	GBA-1-1/2	GBA-4	GBA-10
GBA-3/4	GBA-2	GBA-5	GBA-15
GBA-1	GBA-3	GBA-8	
GLD			
GLD-1/2	GLD-1-1/2	GLD-4	GLD-10
GLD-3/4	GLD-2	GLD-5	GLD-12
GLD-1	GLD-3	GLD-6	GLD-15

Features

- Type GBA has a "red" pin indicator providing visual identification of failed circuits, resulting in faster troubleshooting (reduced circuit downtime)
- Type GLD has a plated pin to activate transmitting a electrical signal to indicate the location of opened circuits, resulting in reduced downtime

Typical applications

- Control circuits
- Electronic circuits

Recommended fuse blocks/fuse holders for 1/4" x 1-1/4" indicating fuses, see page 2-2.

MIC fast-acting 13/32" x 1-1/2" pin-indicating supplemental fuse

Fast-acting, pin-indicating supplemental fuse. Green color code (250 Vac max 1 to 15 A), gray (32 Vac max 20 to 30 A).

Ratings

Fuse amp range	IR at voltage rating		Agency information	
	250 Vac	32 Vac	UL	CSA
1	35 A	—	X	—
2 to 3	100 A	—	X	—
5 to 10	200 A	—	X	—
15	750 A	—	X	—
20 to 30	—	10 kA	—	—

Electrical characteristics

% of fuse rating	Opening time
110%	Indefinitely
135%	1 hour max.

Agency information

- UL Listed, Std. 248-14, 1-15 A, Guide JDYX, File E19180, CE

Catalog no. (amps)			
MIC-1	MIC-5	MIC-15	MIC-30
MIC-2	MIC-8	MIC-20	
MIC-3	MIC-10	MIC-25	

Features

- Color coded by maximum voltage rating
- Pin indication for visual indication of open fuse condition
- Silver-plated pin for positive, electrical signal activation
- Fiber tube construction with nickel-plated bronze endcaps

Typical applications

- Power electronic circuits in which fuse opening must be quickly apparent
- Control circuits
- PLC Circuits

Recommended signal block for, 13/32" x 1-1/2" indicating fuses, see page 2-2.

Data sheet no. 2012 **Data sheet no. 10246**

FNA time-delay 13/32" x 1-1/2" pin-indicating supplemental fuse

Pin-indicating time-delay supplemental fuse. Color coded green (250 Vac max 1/10 to 6 A), blue (125 Vac max 6-1/4 to 15 A) and gray (32 Vac max 20 to 30 A).

Dual-tube construction 12A and up

Ratings

Fuse amp range	IR at system voltage			Agency information	
	250 Vac	125 Vac	32 Vac	UL	CSA
1/10 to 8/10	35 A	10 kA	—	X	X
1 to 6	200 A	10 kA	—	X	X
6-1/4 to 15	—	10 kA	—	X	X
20 to 30	—	—	1 kA	—	—

Agency information

- UL Listed, 1/10 to 8/10 A @ 125/250 Vac, 1-15 A @ 125 Vac, Guide JDYX, File E19180, CSA Certified, 1/10 to 10 A @ 125 Vac, Class 1422-01, File 53787, CE

Catalog no. (amps)			
FNA-1/10	FNA-1	FNA-3	FNA-9
FNA-1/8	FNA-1-1/8	FNA-3-2/10	FNA-10
FNA-15/100	FNA-1-1/4	FNA-3-1/2	FNA-12
FNA-2/10	FNA-1-4/10	FNA-4	FNA-15
FNA-1/4	FNA-1-1/2	FNA-4-1/2	FNA-20
FNA-3/10	FNA-1-6/10	FNA-5	FNA-25
FNA-4/10	FNA-1-8/10	FNA-5-6/10	FNA-30
FNA-1/2	FNA-2	FNA-6	
FNA-6/10	FNA-2-1/4	FNA-6-1/4	
FNA-3/4	FNA-2-1/2	FNA-7	
FNA-8/10	FNA-2-8/10	FNA-8	

Features

- Color coded by maximum voltage rating
- Pin-indication for visual indication of open fuse condition
- Dual-element, time-delay performance permits close sizing on control transformers and relays
- Silver-plated pin for positive, electrical signal activation
- 12 amp and more versions are dual-tube construction

Recommended signal block for 13/32" x 1-1/2" indicating fuses, see page 2.2.

MIS non time-delay 13/32" x 2" pin-indicating supplemental fuse and KAZ non-fuse pin-indicating actuator

MIS is a non time-delay pin-indicating fuse.

KAZ is a non-fuse actuator mounted in parallel with fuses having a 50 amp or larger rating to provide blown fuse dropout for shunt-trip fused switches. To order, specify catalog number **KAZ**.

Ratings

	MIS fuse	KAZ actuator
Volts	600 Vac	600 Vac
Amps	1-12 A	N/A
IR	200 kA	200 kA

MIS fuse electrical characteristics

MIS Fuse	Load	Opening time
All	110%	4 hrs. (min.)
1-5 A	150%	6 min. (max.)
6-12 A	150%	12 min. (max.)

MIS fuse catalog no. (amps)			
MIS-1	MIS-3	MIS-5	MIS-10
MIS-2	MIS-4	MIS-8	MIS-12

KAZ agency information

- UL Listed, Guide JDVS, File E58836, CE

MIS fuse features

- Pin indicator provides visual identification of failed circuits, resulting in faster troubleshooting (reduced circuit downtime)
- Fuse can be used in circuits rated 600 V or less
- High 200 kA interrupting rating for high fault current circuits

MIS fuse typical applications

- 480 V control circuits
- PLC circuits

KAZ actuator features

- Convenient means to add open fuse signaling
- Actuator can be used in circuits rated 600 V or less
- High 200 kA interrupting rating for high fault current circuits

KAZ actuator typical applications

- Large, shunt-trip fused switches
- Fuse protected circuits rated 50 A or larger with shunt-trip devices

Recommended signal blocks for MIS and KAZ, see page 2-2.

GLQ fast-acting, size-rejecting supplemental fuse

Fast-acting, size-rejecting in-line fuse. Match fuse and holder amp rating per catalog number table below.

Ratings

- Volts 300 Vac (or less)
- Amps 1-10 A
- IR 10 kA

Agency information

- UL Listed, Std. 248-14, (Guide JDYX, File E19180), CSA Certified C22.2 No. 248.14, (Class 1422-01,File 53787), CE

Catalog no. (amps) and holders			
Fuse	**Holder[1, 2]**	**Fuse**	**Holder[1, 2]**
GLQ-1	HLQ-1-6/10	GLQ-3	HLQ-3-2/10
GLQ-1-1/2	HLQ-1-6/10	GLQ-4	HLQ-5
GLQ-1-6/10	HLQ-1-6/10	GLQ-5	HLQ-5
GLQ-2	HLQ-3-2/10	GLQ-9	HLQ-10
GLQ-2-1/2	HLQ-3-2/10	GLQ-10	HLQ-10

1 Carrier is UL Recognized, Guide IZLT2, File E14853 and CSA Certified, Class 6225-01, File 47235 10 A, 300 Vac.
2 Units can be panel-mounted either in a knockout hole with a separate steel clip (BK/A-104) or in a keyhole punch using separate mounting clip NO.6374 for panels of thickness 0.043"to 0.062" or NO.4909 for thickness 0.030" to 0.042".
Note: Do not put tension on line (rear) terminal of fuse holder.

Features

- In-line, fast-acting circuit protection
- Rejection feature prevents overfusing

Typical applications

- In-line lighting ballast protection

GMQ time-delay, size-rejecting supplemental fuse

Time-delay, size-rejecting in-line fuse. Match fuse and holder amp rating per catalog number table below.

Ratings

- Volts 300 Vac (or less)
- Amps 1/2 to 6-1/4 A
- IR 10 kA

Agency information

- UL Listed, Std. 248-14, (Guide JDYX, File E19180), CSA Certified, (Class 1422-01, File 53787), CE

Catalog no. (amps) and holders			
Fuse	**Holders[1, 2]**	**Fuse**	**Holders[1, 2]**
GMQ-1/2	HLQ-1/2	GMQ-2-1/2	HLQ-3-2/10
GMQ-6/10	HLQ-1-6/10	GMQ-3	HLQ-3-2/10
GMQ-8/10	HLQ-1-6/10	GMQ-3-2/10	HLQ-3-2/10
GMQ-1	HLQ-1-6/10	GMQ-4	HLQ-5
GMQ-1-1/4	HLQ-1-6/10	GMQ-5	HLQ-5
GMQ-1-6/10	HLQ-1-6/10	GMQ-6-1/4	HLQ-8
GMQ-2	HLQ-3-2/10		

1 Carrier is UL Recognized, Guide IZLT2, File E14853 and CSA Certified, Class 6225-01, File 47235 10 A, 300 Vac.
2 Units can be panel-mounted either in a knockout hole with a separate steel clip (BK/A-104) or in a keyhole punch using separate mounting clip NO.6374 for panels of thickness 0.043"to 0.062" or NO.4909 for thickness 0.030" to 0.042"
Note: Do not put tension on line (rear) terminal of fuse holder.

Features

- In-line, fast-acting circuit protection
- Rejection feature prevents overfusing

Typical applications

- In-line lighting ballast protection

HLQ fuse holders for both GLQ and GMQ fuses

Data sheet no. 2033

Data sheet no. 2030

GLR fast-acting, non size-rejecting supplemental fuse

Fast-acting, non-rejection, in-line fuse. All fuses use the same HLR or HLR-2A holders.

Ratings

- Volts 300 Vac (or less)
- Amps 3/16-15 A
- IR 10 kA

Agency information

- UL Listed, Std. 248-14, 0-15 A/300 Vac Guide JDYX, File E19180, CSA Certified C22.2, No. 248-14, 0-10 A/300 V Class 1422-01, File 53787, CE

Catalog no. (amps) and holders			
Fuse	**Holder[1, 2]***	**Fuse**	**Holder[1, 2]***
GLR-1/2	HLR	GLR-6	HLR
GLR-1	HLR	GLR-7	HLR
GLR-1-1/2	HLR	GLR-8	HLR
GLR-1-6/10	HLR	GLR-9	HLR
GLR-2	HLR	GLR-10	HLR
GLR-3	HLR	GLR-12	HLR
GLR-4	HLR	GLR-15	HLR-2A
GLR-5	HLR		

1 Carrier is UL Recognized, Guide IZLT2, File E14853 and CSA Certified, Class 6225-01, File 47235 12 A, 300 Vac.
2 Units can be panel-mounted either in a knockout hole with a separate steel clip (BK/A-104) or in a keyhole punch using separate mounting clip NO.6374 for panels of thickness 0.043"to 0.062" or NO.4909 for thickness 0.030" to 0.042".
* For two leads (one each for line and loadside) order HLR-2A, 15 A, 300 V
Note: Do not put tension on line (rear) terminal of fuse holder.

"A" in-line holder

An alternative to the HLR fuse holder is the "A" fuse holder. The A fuse holder comes WITHOUT leads. The customer inserts NO.18 insulated solid copper wire into the lineside receptacle as well as into the load side receptacle. It has the same body dimensions, utilizes the same mounting hole, and takes the same mounting clips as the HLR. The A fuse holder is UL Recognized, 10 A, 300 Vac, Guide IZLT2, File E14853 and CSA Certified, 10 A, 300 Vac, Class 6225-01, File 47235. Order catalog number A.

Features

- In-line, fast-acting circuit protection.

Typical applications

- In-line lighting ballast protection

HLR-2A
fuse holder

GMF/GRF time-delay, non size-rejecting supplemental fuses

Time-delay, non-rejection, in-line fuse. All fuses use the same HLR or HLR-2A holders.

Ratings

- Volts 300 Vac (or less)
- Amps 3/10-10 A
- IR 10 kA

Agency information

- UL Listed, Std. 248-14 0-10 A, Guide JDYX, File E19180, CSA Certified, Class 1422-01, File 53787, CE

Catalog no. (amps) and holders			
Fuse	**Holder[1, 2]***	**Fuse**	**Holder[1, 2]***
GMF-3/10	HLR	GMF-3	HLR
GMF-1/2	HLR	GMF-3-2/10	HLR
GMF-6/10	HLR	GMF-4	HLR
GMF-8/10	HLR	GMF-5	HLR
GMF-1	HLR	GMF-6-1/4	HLR
GMF-1-1/4	HLR	GMF-7	HLR
GMF-1-6/10	HLR	GRF-8	HLR
GMF-2	HLR	GMF-10	HLR
GMF-2-1/2	HLR	GRF-10	HLR
GMF-2-8/10	HLR		

1 Carrier is UL Recognized, Guide IZLT2, File E14853 and CSA Certified, Class 6225-01, File 47235 12 A, 300 Vac.
2 Units can be panel-mounted either in a knockout hole with a separate steel clip (BK/A-104) or in a keyhole punch using separate mounting clip NO.6374 for panels of thickness 0.043"to 0.062" or NO.4909 for thickness 0.030" to 0.042".
* For two leads order HLR-2A, 15 A, 300 V
Note: Do not put tension on line (rear) terminal of fuse holder.

"A" in-line holder

An alternative to the HLR fuse holder is the A fuse holder. The A fuse holder comes WITHOUT leads. The customer inserts NO.18 insulated solid copper wire into the line side receptacle as well as into the load side receptacle. It has the same body dimensions, utilizes the same mounting hole, and takes the same mounting clips as the HLR. The A fuse holder is UL Recognized, 10 A, 300 Vac, Guide IZLT2, File E14853 and CSA Certified, 10 A, 300 Vac, Class 6225-01, File 47235. Order catalog number A.

Features

- In-line, time-delay circuits protection

Typical applications

- In-line lighting ballast protection

HLR
fuse holder

Data sheet no. 2032

Data sheet no. 2031

ATR fast-acting micro blade fuse

Fast-acting, color-coded 2-leg micro blade fuse.

Ratings

- Volts 32 Vdc
- Amps 5-30 A
- IR 1000 A

Agency information

- RoHS compliant

Catalog no. (amps)			
Fuse	**Color code**	**Fuse**	**Color code**
ATR-5	Tan	ATR-20	Yellow
ATR-7-1/2	Brown	ATR-25	Clear
ATR-10	Red	ATR-30	Green
ATR-15	Blue		

Features

- Space-savings size
- Industry standard color coding for easy identification of fuse rating

Typical applications

- Automotive

Recommended holder for ATR fuses, see page 2-14.

ATM and ATM-LP fast-acting blade fuses

Fast-acting, color-coded blade fuse available in standard and low-profile versions. Standard version available with indication.

Low-profile

Indicating

Standard

Ratings

- Volts 32 Vdc
- Amps 1-30 A
- IR 1000 A

Agency information

- UL Listed, Guide FHXT, File AU 169 (2-30 A non-indicating ATM)

Catalog no. (amps)			
Non-indicating	***Indicating**	**Low-profile**	**Color code**
ATM-1	—	—	Black
ATM-2	—	ATM-2LP	Gray
ATM-3	ATM-3ID	ATM-3LP	Violet
ATM-4	—	ATM-4LP	Pink
ATM-5	ATM-5ID	ATM-5LP	Tan
ATM-7-1/2	ATM-7-1/2ID	ATM-7-1/2LP	Brown
ATM-10	ATM-10ID	ATM-10LP	Red
ATM-15	ATM-15ID	ATM-15LP	Blue
ATM-20	ATM-20ID	ATM-20LP	Yellow
ATM-25	ATM-25ID	ATM-25LP	Clear
ATM-30	ATM-30ID	ATM-30LP	Green

* Call customer satisfaction for ordering information.

Features

- Industry standard color coding for easy identification of fuse rating
- Indicating versions show blown fuse at a glance, speeds troubleshooting

Typical applications

- Automotive

Recommended blocks and holders for ATM fuses, see page 2-14.

Data sheet no. 2048 (ATM), 2050 (ATM-LP)

ATC fast-acting blade fuse

Fast-acting, color-coded blade fuse for automotive and control circuit applications.

Standard

Indicating

Ratings

- Volts 32 Vdc
- Amps 1-40 A
- IR 1000 A

Agency information

- UL Recognized, (1-40 A) (Guide JFHR2, File E56412), SAE Standard J1284

Catalog no. (amps)		
Non-indicating	***Indicating**	**Color code**
ATC-1	—	Black
ATC-2	—	Gray
ATC-3	ATC-3ID	Violet
ATC-4	—	Pink
ATC-5	ATC-5ID	Tan
ATC-7-1/2	ATC-7-1/2ID	Brown
ATC-10	ATC-10ID	Red
ATC-15	ATC-15ID	Blue
ATC-20	ATC-20ID	Yellow
ATC-25	ATC-25ID	Clear
ATC-30	ATC-30ID	Green
ATC-35	ATC-35ID	Blue-green
ATC-40	ATC-40ID	Orange

* Call customer satisfaction for ordering information.

Features

- Industry standard color coding for easy identification of fuse rating
- Indicating versions show blown fuse at a glance, speeds troubleshooting

Typical applications

- Automotive
- Low voltage control circuits

Recommended blocks and holders for ATC fuses, see page 2-14.

MAX (MAXI) fast-acting blade fuse

Fast-acting, color-coded, high amp blade fuse. Available with and without indication.

Standard

Indicating

Ratings

- Volts 32 Vdc
- Amps
  - 20-80 A (non-indicating)
  - 20-100 A (indicating)
- IR 1000 A

Catalog no. (amps)		
Non-indicating	***Indicating**	**Color code**
MAX-20	MAX-20ID	Yellow
MAX-25	—	Gray
MAX-30	MAX-30ID	Green
MAX-35	—	Brown
MAX-40	MAX-40ID	Orange
MAX-50	MAX-50ID	Red
MAX-60	MAX-60ID	Blue
MAX-70	MAX-70ID	Tan
MAX-80	MAX-80ID	Clear
—	MAX-100ID	Purple

* Call customer satisfaction for ordering information.

Features

- Color coded housing for easy identification of fuse rating
- Indicating versions show blown fuse at a glance, speeds troubleshooting

Typical applications

- Automotive

Recommended holders for MAX fuses, see page 2-14.

In-line fuse holders for ATM, ATC and MAX fuses

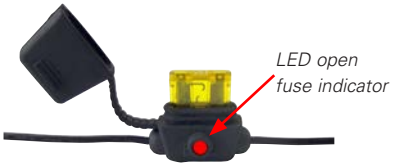

*easy*ID LED indicating holders available for ATM, ATC and MAX fuses

Typical in-line blade fuse holders with leadwires

In-line fuse holders for ATM, ATC and MAX blade fuses. Versions available with and without covers and with open fuse indication.

Ratings

- Volts 32 Vdc
- Amps 80% continuous of fuse rating. See catalog numbers table for individual holder fuses amp ranges.

Catalog no.	Description	Max amps	Electrical connection
ATR holder			
HH2	Black w/ cover	15	2x4" #16 red leadwire
ATM holders - not for low-profile ATM fuses			
HHL	Black w/ cover	20	2x4" #16 black leadwire
HHM	Black w/ cover	30	2x4" #12 red leadwire
HHU	Black w/ cover	30	2x4" #12 red leadwire
ATM-FHID	Indicating holder, black w/ cover	20	2x4" #16 black leadwire
Low-profile ATM holder			
HHV	Black w/ cover	20	2x4" #12 red leadwire
ATC holders			
HHC	Yellow	20	2x4" #16 black leadwire
HHD	Black	30	2x4" #12 yellow leadwire
HHF	Black w/ cover	20	2x4" #16 yellow leadwire
HHG	Black w/ cover	30	2x4" #12 yellow leadwire
HHR	Black w/ cover	30	2x5" #12 red leadwire
HHS	Blue, self-stripping	20	Accepts #14-18 leadwire
ATC-FHID	Indicating holder, black w/ cover	20	2x6" #16 black leadwire
MAX holders			
HHX	Black w/ cover	60	2x5" #6 red leadwire
MAX-FHID	Indicator, black w/ cover	60	2x5" #6 red leadwire

Fuses must be fully inserted into the holder to provide a solid connection. Poor or improper fuse insertion can result in fuse and holder failure and loss of power and/or circuit protection.

PCB fuseclips for ATM and ATC fuses

ATM fuseclips

Catalog no. 1A5778

- 15 A
- Nickel-plated brass

Dimensions — mm (in)

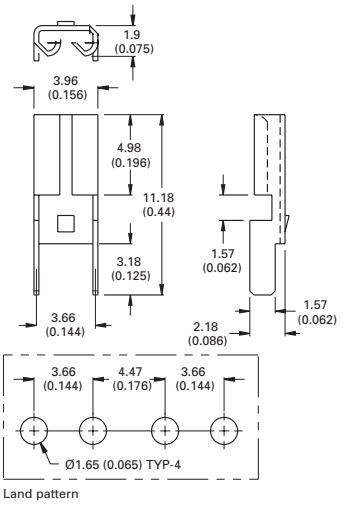

Catalog no. 1A5779

- 15 A
- Nickel-plated brass/glass-filled nylon

Dimensions — mm (in)

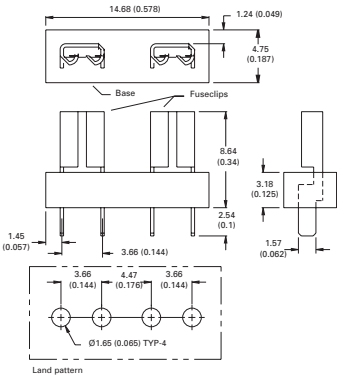

ATC fuseclips

Catalog no. 1A5600

- 20 A
- Tin-plated cartridge brass

Dimensions — in (mm)

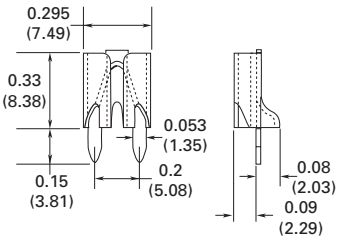

Catalog no. 1A5780

- 15 A
- Nickel-plated brass/glass-filled nylon

Dimensions — mm (in)

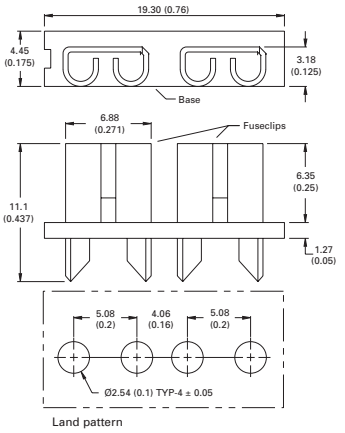

Data sheet no. ATM fuses 2128 (HHM, HHL)
ATC fuses 2107 (HHC, HHD, HHF, HHG)
Max fuses 2129 (HHX)

Data sheet no. 2131

Full range of small dimension fast-acting and time-delay fuses

- 5x15 mm
- 5x20 mm IEC
- 5x20 mm UL
- 1/4" x 5/8"
- 1/4" x 7/8"
- 1/4" x 1"
- 1/4" x 1-1/4"

PLUS
PCB fuse holders and clips

Contents

Description		Section page
Product	**Catalog symbol/type**	
Fuses		
5x15 mm fuses	C515, C519 time-delay	2
	C518, C520 fast-acting	
	C517 fast acting	3
IEC 5x20 mm fuses	GDB, S500, S500-V fast-acting	
	GDA, S501, S501-V fast-acting	4
	S505, S506SC time-delay	
	GDC, S505H, S505H-V, S505SCH, S506 S506-V time-delay	5
UL 5x20 mm fuses	GMA, GMA-V fast-acting	6
	GMC, GMC-V time-delay	
	GMD GMD-V time-delay	7
1/4" x 5/8" fuse	AGA fast-acting	
1/4" x 7/8" fuse	AGW fast-acting	8
1/4" x 1" fuse	AGX fast acting	
1/4" x 1-1/4" fuses	AGC, AGC-V, ABC, ABC-V fast-acting	9
	GBB, GBB-V fast-acting	10
	MDL, MDL-V time-delay	
	MDQ, MDQ-V, MDA, MDA-V time-delay	11
PCB holders and fuseclips		
5x20 mm holders	H15-V, H15-H, HTC-60M	12
1/4" x 1-1/4" holders	HBH-I, HBH-M, HBV-I, HBV-M, HBW-I, HBW-M	13
5 mm fuseclips	HTC-15M, HTC-140M, HTC-200M, HTC-210M, 1A3399, 1A5018, 1A5601, 1A5602	14
1/4" fuseclips	1A1119, 1A1120, 1A1907, 1A3398, 1A4533, 1A4534	15
	5681, 5682	16
9/32" fuseclips	5674	
13/32" fuseclips	5960 1A3400	
9/16" fuseclips	5592	

For blocks and holders, see the following pages in Section 8

Fuse diameter	Pages
Panel mount blocks	
1/4" fuses	4-5
Through panel holders	
5 mm fuses	41
1/4" fuses	41-42
In-line holders	
5 mm fuses	46
1/4" fuses	46-48

C519 ferrule and C515 axial lead time-delay 5x15 mm glass tube fuses

RoHS 2011/65/EU

Ratings

- Volts
  - 125 Vac (3.5-7 A)
  - 250 Vac (125mA-3 A)
  - 32 Vdc (self certified)
- Amps 125mA-7 A
- IR
  - 25 A (350mA @ 600 Vac)
  - 35 A (125mA-1A @ 250 Vac)
  - 100 A (1.25-3 A @ 250 Vac)
  - 400 A (3.5-7 A @ 125 Vac)
  - 10 kA (125mA-3 A @ 125 Vac)

Agency information

- UL Listed, Guide JDYX, File E19180 125mA-250mA and 375mA-3 A, UL Recognized, Guide JDYX2, File E19180, 350mA and 3.5-7 A, CSA Certified, Class 1422-01, File 53787 125mA-250mA and 375mA-3 A, RoHS compliant, CE

Features

- Time-delay for closer sizing on inductive circuits

Typical application

- Electronic circuits
- Printed circuit boards

Catalog no. (amps)			
Ferrule			
C519-125-R	C519-600-R	C519-1.6-R	C519-3.5-R
C519-250-R	C519-750-R	C519-2-R	C519-4-R
C519-350-R	C519-1-R	C519-2.25-R	C519-5-R
C519-375-R	C519-1.25-R	C519-2.5-R	
C519-500-R	C519-1.5-R	C519-3-R	
Axial lead			
C515-125-R	C515-750-R	C515-2-R	C515-5-R
C515-250-R	C515-800-R	C515-2.25-R	C515-6-R
C515-350-R	C515-1-R	C515-2.5-R	C515-7-R
C515-375-R	C515-1.25-R	C515-3-R	
C515-500-R	C515-1.5-R	C515-3.5-R	
C515-600-R	C515-1.6-R	C515-4-R	

Data sheet no. 2006 (C515) and 2007 (C519)

C520 ferrule and C518 axial lead fast-acting 5x15 mm glass tube fuses

RoHS 2011/65/EU

Ratings

- Volts
  - 250 Vac
  - 32 Vdc (self certified)
- Amps 100mA-5 A
- IR
  - 35 A (100mA-750mA @ 250 Vac)
  - 10 kA (100mA-5 A @ 125 Vac)
  - 100 A (1.5-3.5 A @ 250 Vac)
  - 200 A (4-5 A @ 250 Vac)

Agency information

- UL Recognized, Guide JDYX2, File E19180, CSA Certified, Class 1422-01, File 53787, RoHS compliant, CE

Features

- Small footprint saves space in equipment
- Fast-acting for maximum component protection
- Available in ferrule and axial leaded configurations

Typical applications

- Electronic circuits
- Printed circuit boards

Catalog no. (amps)			
Ferrule			
C520-100-R	C520-500-R	C520-2.5-R	C520-5-R
C520-125-R	C520-750-R	C520-3-R	
C520-250-R	C520-1.5-R	C520-3.5-R	
C520-375-R	C520-2-R	C520-4-R	
Axial lead			
C518-100-R	C518-375-R	C518-2-R	C518-3.5-R
C518-125-R	C518-500-R	C518-2.5-R	C518-4-R
C518-250-R	C518-750-R	C518-3-R	C518-5-R

Data sheet no. 2026 (C518) and 2027 (C520)

C517 axial lead fast-acting 5x15 mm glass tube fuse

RoHS 2011/65/EU

Ratings

- Volts
  - 350 Vac
  - 32 Vdc (self certified)
- Amps 3 A
- IR
  - 100 A @ 350 Vac*
  - 100 A @ 250 Vac
  - 10 kA @ 125 Vac

* 350 Vac/100 A IR is UL Recognized.

Agency information

- UL Listed, Guide JDYX, File E19180, CSA Certified, Class 1422-01, File 53787, UL Recognized, Guide JDYX2, File E19180, RoHS compliant, CE

Features

- Small footprint saves space in equipment
- Fast-acting for maximum component protection
- 350 Vac rating for 277 V ballast circuit protection

Typical applications

- Electronic circuits
- Printed circuit boards
- Electronic ballast protection

To order, use catalog number C517-3-R

S500 ferrule (GDB†) and S500-V axial lead fast-acting, low breaking capacity 5x20 mm glass tube fuses

RoHS 2011/65/EU

Ratings

- Volts
  - 250 Vac (or less)
  - 32 Vdc (self certified)
- Amps 32mA-10 A
- IR
  - 35 A (32mA-3.15 A)
  - 40 A (4 A)
  - 63 A (6.3 A)
  - 80 A (8 A)
  - 100 A (10 A)

Agency information

- cURus, SEMKO, VDE, BSI, IMQ, CCC, RoHS compliant, CE
- Agency information not applicable to all ratings; see data sheet for details.

Features

- Fast-acting for maximum protection, conforms to IEC 60127-2 (160mA-10 A)

Typical applications

- Electronic circuits

Catalog no. (amps)*			
S500-32-R	S500-160-R	S500-800-R	S500-4-R
S500-40-R	S500-200-R	S500-1-R	S500-5-R
S500-50-R	S500-250-R	S500-1.25-R	S500-6.3-R
S500-63-R	S500-315-R	S500-1.6-R	S500-8-R
S500-80-R	S500-400-R	S500-2-R	S500-10-R
S500-100-R	S500-500-R	S500-2.5-R	
S500-125-R	S500-630-R	S500-3.15-R	

* GDB is not available with axial leads. To order axial leads, place "V" in the S500 catalog number. E.g., S500-**V**-32-R.
† When ordering GDB versions, do not add "-R" suffix to catalog number.

S501 ferrule (GDA†) and S501-V Axial lead fast-acting high breaking capacity 5x20 mm ceramic tube fuses

Ratings

- Volts
  - 250 Vac (or less)
  - 32 Vdc (self certified)
- Amps 50mA-10 A**
- IR 1500 A @ 250 Vac

Agency information

- cURus, SEMKO, VDE, IMQ, CCC, CSA, BSI, MITI/JET, RoHS compliant, CE
- Agency information not applicable to all ratings, see data sheet for details.

Features

- Fast-acting for maximum protection
- High break capacity for use in higher fault energy electronic circuitry
- Conforms to IEC standards

Typical applications

- Electronic circuits

Catalog no. (amps)*			
S501-50-R	S501-200-R	S501-800-R	S501-3.15-R
S501-63-R	S501-250-R	S501-1-R	S501-4-R
S501-80-R	S501-315-R	S501-1.25-R	S501-5-R
S501-100-R	S501-400-R	S501-1.6-R	S501-6.3-R
S501-125-R	S501-500-R	S501-2-R	S501-8-R
S501-160-R	S501-630-R	S501-2.5-R	S501-10-R

* GDA is not available with axial leads. To order axial leads, place "V" in the S501 catalog number. E.g., S501-**V**-125-R.
† When ordering GDA version, do not add "-R" suffix to catalog number, GDA is not available above 6.3 A.

Data sheet no. 2051 (S501), 2014 (GDA)

S505 ferrule, and S505SC axial lead time-delay, high-breaking capacity 5x20 mm ceramic tube fuses

Ratings

- Volts
  - 250 Vac (or less)
  - 32 Vdc (self certified)
- Amps 500mA-12 A
- IR 1500 A @ 250 Vac

Agency information

- cURus, CSA, IMQ, VDE, SEMKO, CCC/CQC, PSE/JET, KC, BS, RoHS compliant
- Agency information not applicable to all ratings, see data sheet for details.

Features

- Time-delay performance ideal for inductive circuits.
- Conforms to IEC standards.

Typical applications

- Electronic circuits

Catalog no. (amps)*			
S505-500-R**	S505-1.6-R	S505-4-R	S505-10-R
S505-800-R**	S505-2-R	S505-5-R	S505-12-R**
S505-1-R	S505-2.5-R	S505-6.3-R	
S505-1.25-R	S505-3.15-R	S505-8-R	

* To order axial leads, place "SC" in catalog number. E.g., S505**SC**-2-R.
**Axial leads not available.

Data sheet no. 2037

S505H ferrule, and S505H-V and S505SCH axial time-delay high breaking capacity 5x20 mm ceramic tube fuses

RoHS 2011/65/EU

Ratings

- Volts
  - 600 Vac/400 Vdc (S505H 500mA-5 A
  - 500 Vac/400 Vdc (S505H 6.3-10 A)
  - 250 Vac (S505SCH)
- Amps
  - 500mA-10 A (S505H)
  - 3.15-6.3 A (S505SCH)
- IR @ 250 Vac
  - 35 A (S505H)
  - 1.5 kA (S505SCH / 50 Hz / 250 Vac / 400 Vdc)
  - 100 A max AC

Agency information

- cURus, CCC, CQC, TUV, PSE/JET (S505H)
- cURus, KC, CQC, TUV (S505SCH)
- RoHS compliant
- Agency information not applicable to all ratings; see data sheets for details.

Features

- Time-delay, high breaking capacity
- Conforms to IEC standards

Typical applications

- Power supplies/adapters
- Desktops/notebooks

Catalog no. (amps)			
S505H*			
S505H-500-R	S505H-1.6-R	S505H-4-R	S505H-10-R
S505H-800-R	S505H-2-R	S505H-5-R	
S505H-1-R	S505H-2.5-R	S505H-6.3-R	
S505H-1.25-R	S505H-3.15-R	S505H-8-R	
S505SCH (axial lead only			
S505SCH-3.15-R	S505SCH-5-R	S505SCH-6.3-R	

* To order an axial lead S505H fuse, place "V" in catalog number. E.g., S505H-**V**-5-R.

S506 ferrule (GDC†) and S506-V axial lead time-delay low breaking capacity 5x20 mm glass tube fuses

RoHS 2011/65/EU

Ratings

- Volts
  - 250 Vac (or less)
  - 32 Vdc (self certified)
- Amps 32mA-15 A**
- IR 35 A @ 250 Vac

Agency information

- UR, CSA, cURus, SEMKO, VDE, BSI, IMQ, VDE, PSE/JET, CCC, RoHS compliant
- Agency information not applicable to all ratings; see data sheet for details.

Features

- Time-delay for inductive circuits
- Conforms to IEC standards

Typical applications

- Electronic circuits

Catalog no. (amps)*			
S506-32-R	S506-160-R	S506-800-R	S506-4-R
S506-40-R	S506-200-R	S506-1-R	S506-5-R
S506-50-R	S506-250-R	S506-1.25-R	S506-6.3-R
S506-63-R	S506-315-R	S506-1.6-R	S506-8-R
S506-80-R	S506-400-R	S506-2-R	S506-10-R
S506-100-R	S506-500-R	S506-2.5-R	S506-12.5-R
S506-125-R	S506-630-R	S506-3.15-R	S506-15-R

* GDC is not available with axial leads. To order axial leads, place "V" in the S506 catalog number. E.g., S506-**V**-15-R.
† When ordering GDC version, do not add "-R" suffix to catalog number., GDC fuses are not available above 6.3 A.

GMA ferrule and GMA-V axial leads fast-acting 5x20 mm glass tube fuses

RoHS 2011/65/EU

Ratings

- Volts
  - 250 Vac (63mA-3 A)
  - 125 Vac (3.15-15 A)
  - 32 Vdc (self certified)
- Amps 63mA-15 A
- IR
  - 35 A (63mA-1 A @ 250 Vac, p.f. = 0.7-0.8)
  - 10 kA (63mA-6 A @ 125 Vac, p.f. = 0.7-0.8)
  - 100 A (1.25-2.5 A @ 250 Vac, p.f. = 0.7-0.8)
  - 200 A (7-8 A @ 125 Vac, p.f. = 1.0)
  - 150 A (10-15 A @ 125 Vac, p.f. = 1.0)

Agency information

- UL Listed, Std. 248-14 Guide JDYX, File E19180 up to 6 A, UL Recognized, Guide JDYX2, File E19180, 7-15 A, CSA Certified, Class 1422-01,File 53787 up to 6 A, PSE Approval 1-15 A, RoHS compliant, CE

Features

- Fast-acting for maximum protection

Typical applications

- Electronic circuits

Catalog no. (amps)*			
GMA-63-R	GMA-600-R	GMA-2-R	GMA-7-R
GMA-100-R	GMA-750-R	GMA-2.5-R	GMA-8-R
GMA-125-R	GMA-800-R	GMA-3.15-R	GMA-10-R
GMA-200-R	GMA-1-R	GMA-3.5-R	GMA-15-R
GMA-250-R	GMA-1.25-R	GMA-4-R	
GMA-300-R	GMA-1.5-R	GMA-5-R	
GMA-500-R	GMA-1.6-R	GMA-6-R	

* To order axial leads, place "V" in catalog number. E.g., GMA-**V**-8-R.

Data sheet no. 2017

GMC ferrule and GMC-V axial lead medium time-delay 5x20 mm glass tube fuses

RoHS 2011/65/EU

Ratings

- Volts
  - 250 Vac (63mA-3.15 A)
  - 125 Vac (3.5-10 A)
  - 32 Vdc (self certified)
- Amps 63mA-10 A
- IR
  - 35 A (63mA-1 A @ 250 Vac, p.f. = 0.7-0.8)
  - 10 kA (63mA-6 A @ 125 Vac, p.f. = 0.7-0.8)
  - 100 A (1.25-3.15 A @ 250 Vac, p.f. = 0.7-0.8)
  - 200 A (6.3-10 A @ 125 Vac, p.f. = 1.0)

Agency information

- UL Listed, Std. 248-14, Guide JDYX, File E19180 up to 6.3 A, UL Recognized, Guide JDYX2, File E19180 7-10 A, CSA Certified, Class 1422-01, File 53787 up to 6.3 A, MITI Approval, 1-10 A, KC, RoHS compliant, CE
- KC not applicable to all ratings; see data sheet for details

Features

- Conforms to UL standards

Typical applications

- Electronic circuits

Catalog no. (amps)*			
GMC-63-R	GMC-315-R	GMC-1.25-R	GMC-5-R
GMC-80-R	GMC-400-R	GMC-1.5-R	GMC-6-R
GMC-100-R	GMC-500-R	GMC-1.6-R	GMC-6.3-R
GMC-125-R	GMC-600-R	GMC-2-R	GMC-7-R
GMC-150-R	GMC-630-R	GMC-2.5-R	GMC-8-R
GMC-200-R	GMC-750-R	GMC-3.15-R	GMC-10-R
GMC-250-R	GMC-800-R	GMC-3.5-R	
GMC-300-R	GMC-1-R	GMC-4-R	

* To order axial leads, place "V" in catalog number. E.g., GMC-**V**-5-R.

Data sheet no. 4395

GMD ferrule and GMD-V axial leads time-delay 5x20 mm glass tube fuses

Ratings

- Volts
  - 250 Vac
  - 32 Vdc (self certified)
- Amps 125mA-4 A
- IR
  - 10 kA (125mA-3 A @ 125 Vac, p.f. = 0.7-0.8)
  - 10 kA (4 A @ 125 Vac, p.f. = 1.0)
  - 35 A (125mA-1 A @ 250 Vac, p.f. = 0.7-0.8)
  - 100 A (1.2-3. A @ 250 Vac, p.f. = 0.7-0.8)
  - 200 A (4 A @ 250 Vac, p.f. = 1.0)

Agency information

- UL Listed Guide JDYX, File E19180, UL Recognized Card (4 A), Guide JDYX2, File E19180, 4 A, CSA Certified, Class 1422-01, File 53787, PSE/JET, File 1641-31003-1001, RoHS complaint, CE
- Agency information not applicable to all ratings; see data sheet for details

Features

- Time-delay for inductive circuits
- Conforms to UL standards

Typical applications

- Electronic circuits

Catalog no. (amps)*			
GMD-125-R	GMD-375-R	GMD-800-R	GMD-2-R
GMD-150-R	GMD-400-R	GMD-1-R	GMD-2.5-R
GMD-200-R	GMD-500-R	GMD-1.2-R	GMD-3-R
GMD-250-R	GMD-600-R	GMD-1.25-R	GMD-4-R
GMD-300-R	GMD-630-R	GMD-1.5-R	
GMD-315-R	GMD-750-R	GMD-1.6-R	

* To order axial leads, place "V" in catalog number. E.g., GMD-**V**-2.5-R.

AGA fast-acting 1/4″ x 5/8″ glass tube fuse

Ratings

- Volts
  - 125 Vac (or less)
  - 32 Vdc (self certified)
- Amps 1-30 A
- IR
  - 10 kA (1 to 1-1/2 A @ 125 Vac)
  - 200 A (2-5 A @ 125 Vac)
  - 1000 A (6-30 A @ 32 Vac)

Agency information

- UL Listed, Std. 248-14, Guide JDYX, File E19180 up to 3-1/2 A UL Recognized, Guide JDYX2 12-30 A, CE

Features

- Fast-acting for maximum protection
- Size rejects insertion of other fuse types

Typical applications

- Electronic circuits

Catalog no. (amps)			
AGA-1	AGA-3	AGA-7-1/2	AGA-25
AGA-1-1/2	AGA-5	AGA-10	AGA-30
AGA-2	AGA-6	AGA-15	
AGA-2-1/2	AGA-7	AGA-20	

Data sheet no. 2019
Data sheet no. 2039

AGW fast-acting 1/4″ x 7/8″ glass tube fuse

Ratings

- Volts
  - 32 Vac
  - 32 Vdc (self certified)
- Amps 1-30 A
- IR 1 kA AC

Features

- Fast-acting for maximum protection

Typical applications

- Electronic circuits

Catalog no. (amps)			
AGW-1	AGW-3	AGW-7-1/2	AGW-25
AGW-1-1/2	AGW-4	AGW-10	AGW-30
AGW-2	AGW-5	AGW-15	
AGW-2-1/2	AGW-6	AGW-20	

Data sheet no. 2040

AGX fast-acting 1/4″ x 1″ glass tube fuse

Ratings

- Volts
  - 250 Vac (1//4-20 A)
  - 125 Vac (25-30 A)
  - 32 Vdc (1/4-30 A)
- Amps 1/4-30 A
- IR
  - 35 A (1/4-1 A @ 250 Vac)
  - 10 kA (1/4-10 A @ 125 Vac)
  - 200 A (15-20 A @ 125 Vac)
  - 100 A (25-30 A @ 125 Vac)
  - 1000 A (8-30 A @ 32 Vac)

Agency information

- cULus up to 10 A, Guide JDYX, File E 19180 and Guide JDYX7, File E19180, UL Recognized Card 15-30 A Guide JDYX2, File E19180, CSA Component Acceptance Card 15-30 A Class No. 1422-01, File 53787

Features

- Size rejects inserting of other fuse types

Typical applications

- Electronic circuits

Catalog no. (amps)			
AGX-1/4	AGX-1	AGX-4	AGX-15
AGX-3/10	AGX-1-1/4	AGX-5	AGX-20
AGX-3/8	AGX-1-1/2	AGX-6	AGX-25
AGX-4/10	AGX-2	AGX-7	AGX-30
AGX-1/2	AGX-2-1/2	AGX-8	
AGX-3/4	AGX-3	AGX-10	

Data sheet no. 2041

AGC ferrule and AGC-V axial lead fast-acing 1/4" x 1-1/4˝ glass tube fuses

Ratings

- Volts
  - 250 Vac (1/20-10 A)
  - 32 Vac (12-40 A)
  - 32 Vdc (self certified)
- Amps 1/20-40 A
- IR
  - 35 A (1/20-1 A @ 250 Vac)
  - 100 A (11/4-3 A @ 250 Vac)
  - 200 A (4-10 A @ 250 Vac)
  - 10 kA (1/20-10 A @ 125 Vac)
  - 1000 A (12-40 A @ 32 Vac)

Agency information

- UL Listed, Guide JDYX, File E19180, up to 10 A, UL Recognized, Guide JDYX2, File E19180, 12-30 A, CSA Certified, Class 1422-01, CSA Component Acceptance Card, Class No. 1422-30, RoHS compliant, CE

Features

- Original electronic glass tube fuse
- Fast-acting for maximum protection
- Wide amp/volt ratings allow versatility of protecting electronic circuits

Typical applications

- Electronic circuits

Catalog no. (amps)*			
AGC-1/20-R	AGC-3/4-R	AGC-5-R	AGC-15-R
AGC-1/10-R	AGC-1-R	AGC-6-R	AGC-20-R
AGC-1/8-R	AGC-1-1/4-R	AGC-7-R	AGC-25-R
AGC-3/16-R	AGC-1-1/2-R	AGC-7-1/2-R	AGC-30-R
AGC-2/10-R	AGC-2-R	AGC-8-R	AGC-35-R
AGC-1/4-R	AGC-2-1/4-R	AGC-9-R	AGC-40-R
AGC-3/10-R	AGC-2-1/2-R	AGC-10-R	
AGC-3/8-R	AGC-3-R	AGC-12-R	
AGC-1/2-R	AGC-4-R	AGC-14-R	

* To order axial leads, place "V" in catalog number. E.g., AGC-**V**-1/10-R.

ABC ferrule and ABC-V axial leads fast-acting 1/4" x 1-1/4˝ ceramic tube fuse

Ratings

- Volts
  - 250 Vac/125 Vdc (1/4-15 A, 20-30 A)*
  - 250 Vac (18 A)
  - 32 Vdc (self certified)
- Amps 1/4-30 A
- IR**
  - 35 A (1/4-1 A @ 250 Vac)
  - 100 A (11/2-3 A @ 250 Vac)
  - 200 A (4-10 A @ 250 Vac)
  - 750 A (12-15 A @ 250 Vac)
  - 400 A (18-20 A @ 250 Vac)
  - 10 kA (1/4-15 A @ 125 Vac)
  - 1 kA (18-30 A @ 125 Vac)
  - 10 kA (1/4-15, 20 A @ 125 Vdc)
  - 400 A (25-30 A @ 125 Vdc)
  - 200 A (25-30 A @ 250 Vac)

* CSA approvals for 25 A and 30 A are at 125 Vac – IR 1000 A and Vdc – IR 400 A (IR 1000 A at 75 Vdc)

** Interrupting ratings measured at 70% – 80% power factor on AC. The interrupting ratings for 18 A and 20 A were measured at 85%-95% power factor on AC. The interrupting ratings for 25 A and 30 A were measured at 89% power factor on AC.

Agency information

- UL Listed, Std. 248-14, Guide JDYX File E19180 up to 15 A; UL Recognized, Guide JDYX2, File E19180, 18-30 A; CSA Certified, Class 1422-01 and 1422-30, File 53787, RoHS compliant, CE

Features

- Ceramic body allows for higher amp/volt rating combinations

Typical applications

- Electronic circuits

Catalog no. (amps)			
ABC-1/4-R	ABC-2-R	ABC-6-R	ABC-15-R
ABC-1/2-R	ABC-2-1/2-R	ABC-7-R	ABC-18-R
ABC-3/4-R	ABC-3-R	ABC-8-R	ABC-20-R
ABC-1-R	ABC-4-R	ABC-10-R	ABC-25-R
ABC-1-1/2-R	ABC-5-R	ABC-12-R	ABC-30-R

* To order axial leads, place "V" in catalog number. E.g., ABC-**V**-7-R.

Data sheet no. 2543
Data sheet no. 2000

GBB ferrule and GBB-V axial lead very-fast-acting 1/4" x 1-1/4˝ ceramic tube fuses

Ratings

- Volts 250 Vac/125 Vdc
- Amps 1-30 A
- IR
  - 200 A @ 250 Vac
  - 200 A (20-30 A @ 125 Vac/dc)
  - 10 kA (1-15 A @ 125 Vac/dc)

Agency information

- UL Recognized, Std. 248-14, Guide JFHR2, File E56412, CSA Component Acceptance Class 1422-30, File 53787, RoHS complaint, CE

Features

- Very fast-acting performance allows protection of highly sensitive electronic circuitry

Typical applications

- Electronic circuits

Catalog no. (amps)*			
GBB-1-R	GBB-4-R	GBB-8-R	GBB-15-R
GBB-1-1/4-R	GBB-5-R	GBB-9-R	GBB-20-R
GBB-2-R	GBB-6-R	GBB-10-R	GBB-25-R
GBB-3-R	GBB-7-R	GBB-12-R	GBB-30-R

* To order axial leads, place "V" in catalog number. E.g., GBB-**V**-10-R.

MDL ferrule and MDL-V axial lead time-delay 1/4" x 1-1/4˝ glass tube fuses

Ratings

- Volts
  - 250 Vac (1/16-8 A)
  - 32 Vac (9-30 A)
  - 32 Vdc (self certified)
- Amps 1/16-30 A
- IR*
  - 35 A (1/16-1 A @ 250 Vac)
  - 100 A (11/4-3 A @ 250 Vac)
  - 200 A (4-8 A @ 250 Vac)
  - 10000 A (1/16-8 A @ 125 Vac)
  - 1000 A (9-30 A @ 32 Vac)

* Interrupting ratings were measured at 70% – 80% power factor on AC, and at a time constant described in UL 198L.

Agency information

- UL Listed, Guide JDYX, File E19180 up to 8 A; CSA Certified Class 1422-01 up to 8 A; UL Recognized, Guide JDYX2, File E19180, 9-30 A; CSA Component Acceptance, Class 1422-30, 9-30 A, RoHS compliant, CE

Features

- Time-delay allows close sizing on inductive circuits

Typical applications

- Electronic circuits

Catalog no. (amps)*			
MDL-1/16-R	MDL-1/2-R	MDL-3-R	MDL-10-R
MDL-1/10-R	MDL-3/4-R	MDL-3-2/10-R	MDL-12-R
MDL-1/8-R	MDL-1-R	MDL-4-R	MDL-15-R
MDL-2/10-R	MDL-1-1/4-R	MDL-5-R	MDL-20-R
MDL-3/16-R	MDL-1-1/2-R	MDL-6-R	MDL-25**
MDL-1/4-R	MDL-2-R	MDL-7-R	MDL-30**
MDL-3/10-R	MDL-2-1/4-R	MDL-8-R	
MDL-3/8-R	MDL-2-1/2-R	MDL-9-R	

* To order axial leads, place "V" in catalog number. E.g., MDL-**V**-3-R.
**RoHS compliant construction not available.

Data sheet no. 2013

Data sheet no. 2004

MDQ ferrule and MDQ-V axial lead dual-element, time-delay 1/4" x 1-1/4˝ glass tube fuses

Ratings

- Volts
  - 250 Vac (1/100-7 A)
  - 32 Vac (7-1/2 to 15 A)
  - 32 Vdc (self certified)
- Amps 1/100-15 A
- IR
  - 35 A (1/100-1 A @ 250 Vac)
  - 100 A (1-1/4 to 3 A @ 250 Vac)
  - 200 A (4-7 A @ 250 Vac)
  - 1000 A (7-1/2 to 12 A @ 32 Vac)

Agency information

- UL Listed, Std. 248-14, Guide JDYX, File E19180 1/16-7 A, CSA Component Acceptance, Class 1422-01, File 47233 1/16 -15 A, UL Recognized, Guide JDYX2, File E19180, 7-1/2-15 A.

Features

- Dual-element design allows closer sizing to inductive circuits than any other fuses

Typical applications

- Electronic relay and control circuits

Catalog no. (amps)*			
MDQ-1/100	MDQ-3/10	MDQ-1-1/2	MDQ-5
MDQ-1/32	MDQ-3/8	MDQ-1-6/10	MDQ-6
MDQ-1/16	MDQ-4/10	MDQ-1-8/10	MDQ-6-1/4
MDQ-1/10	MDQ-1/2	MDQ-2	MDQ-7
MDQ-1/8	MDQ-6/10	MDQ-2-1/4	MDQ-7-1/2
MDQ-15/100	MDQ-3/4	MDQ-2-1/2	MDQ-8
MDQ-175/1000	MDQ-8/10	MDQ-2-8/10	MDQ-9
MDQ-3/16	MDQ-1	MDQ-3	MDQ-10
MDQ-2/10	MDQ-1-2/10	MDQ-3-2/10	MDQ-12
MDQ-1/4	MDQ-1-1/4	MDQ-4	MDQ-15

* To order axial leads, place "V" in catalog number. E.g., MDQ-**V**-1-1/4.

MDA ferrule and MDA-V axial lead time-delay 1/4" x 1-1/4˝ ceramic tube fuses

Ratings

RoHS 2011/65/EU

- Volts
  - 250 Vac (or less)
  - 125 Vdc (20-30 A)
  - 32 Vdc (self certified)
- Amps 1/4-30 A
- IR**
  - 35 A (1/4 to 1 A @ 250 Vac)
  - 100 A (1-1/2 to 2 A @ 250 Vac)
  - 200 A (2-1/2 to 10 A @ 250 Vac)
  - 750 A (12-15 A @ 250 Vac)
  - 1500 A (20-30 A @ 250 Vac)
  - 10 kA (1/4-30 A @ 125 Vac)
  - 10 kA (20-30 A @ 125 Vdc)

**Interrupting ratings were measured at 70% – 80% power factor on AC, and at a time constant described in UL 248.

Agency information

- UL Listed, Std. 248-14, Guide JDYX, File E19180 up to 20 A, CSA Certified, Class 1422-01, File 53787 up to 20 A.
  UL Recognized, Guide JDYX2, File E19180, 25-30 A, CSA Component Acceptance, Class 1422-30, 25-30 A, RoHS compliant, CE

Features

- Ceramic body for higher amp/volt ratings
- Inventory consolidation by replacing MDL fuses allows for reduced SKU investment and minimizing potential for misapplying fuse

Typical applications

- Electronic circuits

Catalog no. (amps)*			
MDA-1/4-R	MDA-2-R	MDA-6-R	MDA-15-R
MDA-1/2-R	MDA-2-1/2-R	MDA-7-R	MDA-20-R
MDA-3/4-R	MDA-3-R	MDA-8-R	MDA-25 A-R
MDA-1-R	MDA-4-R	MDA-10-R	MDA-30 A-R
MDA-1-1 /2-R	MDA-5-R	MDA-12-R	

* To order axial leads, place "V" in catalog number. E.g., MDA-**V**-1-1/2-R.

H15-V vertical mount 5 mm fuse holder with threaded cap

RoHS 2011/65/EU

Ratings

- Volts 250 Vac
- Amps 10 A (cURus and VDE)
- Temperature rise 41°C

Agency information

- cURus Recognized, Guide IZLT2/IZLT8, File E14853
- VDE File 40039714

Materials

- Tin-plated clip
- Tin-plated copper terminals
- Thermoplastic body (UL 94V0, glow wire test: 960°C per IEC 695-2-1)

Catalog no.	Carton qty.
BK-H15-V-1	200
BK1-H15-V-1	1000
BK-H15-V-1-B	100 holder body only
BK-H15-V-1-K	100 holder cap only

Dimensions - in (mm)

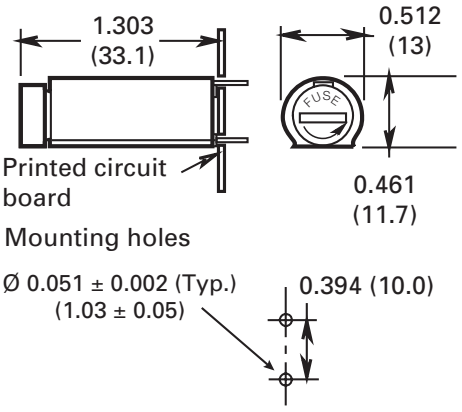

Data sheet no. 4426

H15-H horizontal mount 5 mm fuse holder with threaded cap

RoHS 2011/65/EU

Ratings

- Volts 250 Vac
- Amps 10 A (cURus) 6.3 A (VDE)
- Temperature rise 41°C

Agency information

- cURus Recognized, Guide IZLT2/IZLT8, File E14853
- VDE File 40039714

Materials

- Tin-plated clip
- Tin-plated copper terminals
- Thermoplastic body (UL 94V0, glow wire test: 960°C per IEC 695-2-1)

Catalog no.	Carton qty.
BK-H15-H-1	200
BK1-H15-H-1	1000
BK-H15-H-1-B	100 holder body only
BK-H15-H-1-K	100 holder cap only

Dimensions - in (mm)

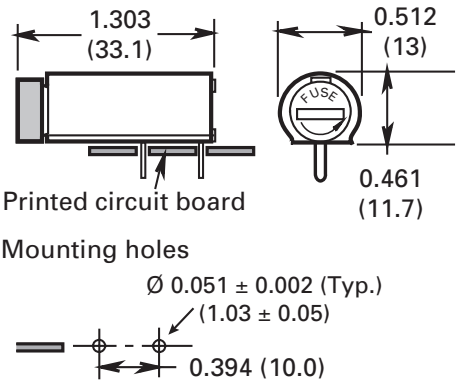

Data sheet no. 4426

HTC-60M four-leg stand-off mount 5 mm fuse holder

RoHS 2011/65/EU

Ratings

- Volts 250 Vac
- Amps 6.3 (cURus and VDE)

Agency information

- cURus Recognized, Guide IZLT2/IZLT8, |File E14853
- VDE File 4004459

Materials

- Tin-plated brass terminals

Catalog no.	Qty.
HTC-60M	10
BK-HTC-60M	100 (bulk)

Dimensions - in (mm)

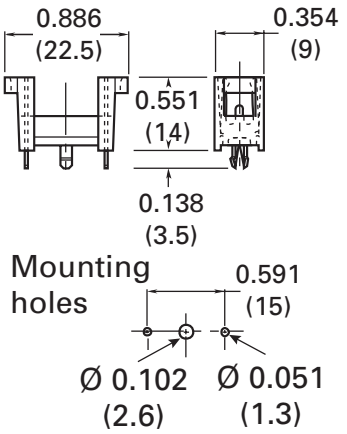

Data sheet no. 2110

HBH-I (1/4" x 1-1/4˝) and HBH-M (5x20 mm) horizontal mount fuse holders

Dimensions - in (mm)

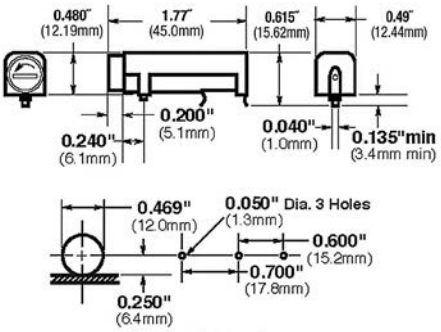

Ratings

- UL 16 A/250 V
- CSA 12 A/250 V
- VDE 6.3 A/250 V
- SEMKO 10 A/250 V

Agency information

- UL Recognized, Guide IZLT2, File EI4853, CSA Certified, Class 6225-01, File 47235, VDE 4009241 (HBV, HBW), SEMKO 800444, CE

Electrical

- Insulation resistance 10 MΩ 500 Vdc
- Contact resistance less than 0.005 Ω @ 200mV
- Dielectric strength over 200 V/mil

HBV-I (1/4" x 1-1/4˝) and HBV-M (5x20 mm) vertical mount fuse holders with stability pins

Dimensions - in (mm)

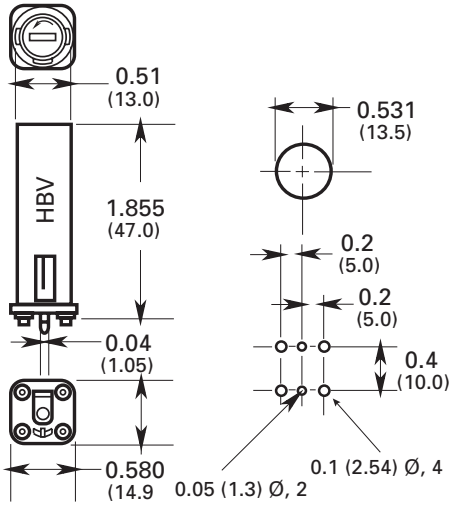

Material

- High dielectric molded phenolic with a UL 94V0 flammability rating
- Fuse carrier and knob: spring-loaded, bayonet-type, tin-plated brass with screwdriver slot

Mounting

- "Kicked" terminals (all) and stability pins on HBV and HBW
- Temperature rating (RTI): body 150°C, knob 130°C

HBW-I (1/4" x 1-1/4˝) and HBW-M (5x20 mm) vertical mount fuse holder without stability pins

Dimensions - in (mm)

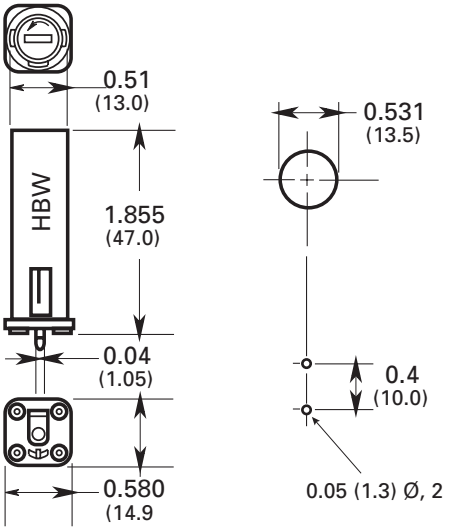

Replacement fuse caps

FBI and FBM fuse caps fit PCB fuse holders HBH-_, HBV-_ and HBW-_.

To order, specify Catalog numbers:

- FBI for 1/4" diameter fuses
- FBM for 5 mm diameter fuses

FBI

FBM

HTC-15M, HTC-140M 5 mm fuse holder and snap-on cover

Ratings

- 250 V / 6.3 A / 1.6 W

Agency information

- cURus, Guide 1ZLT2 and IZLT8, File E14853
- VDE 40004458
- RoHS compliant

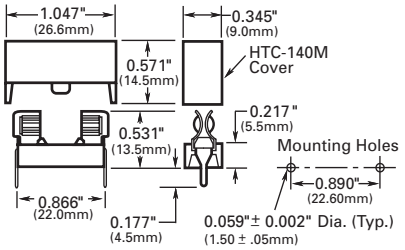

Catalog no.	Description
HTC-15M	Holder only
HTC-140M	Holder with natural color cover
HTC-150M*	Holder with transparent cover

* Available in bulk only, order BK/HTC-150M.

HTC-200M 5 mm fuseclip

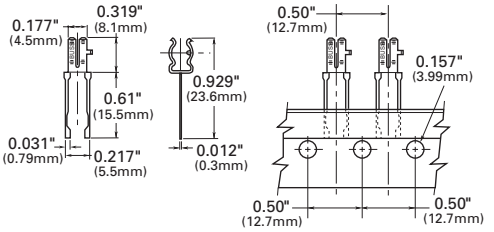

Catalog no.	Material	Description
HTC-200M	Tin-plated bronze	Tape and fan fold pack
AP/HTC-200M		Ammo pack 1000 pieces per box

HTC-210M 5 mm fuseclip with end stops

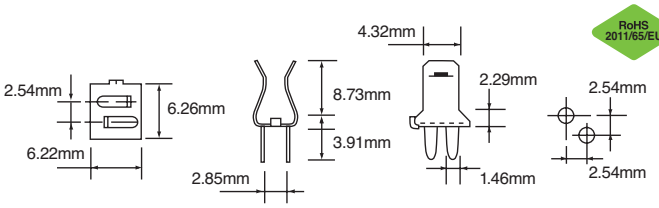

Catalog no.	Material	Description
HTC-210M	Tin-plated bronze	Tape and fan fold pack
AP/HTC-210M		Ammo pack 1000 pieces per box

1A3399 low profile 5 mm fuseclips with end stops and straight leads

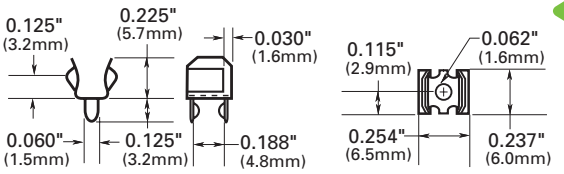

Catalog no.	Material*	Finish
1A3399-01	BeCu	Silver
1A3399-04-R	BeCu	Bright tin
1A3399-10-R	Copper alloy	Bright tin

* BeCu recommended for more than 15 A.

1A5018 high profile 5 mm fuseclips with end stops and straight leads

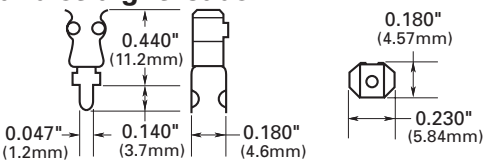

Catalog no.	Material*	Finish
1A5018-07	Copper alloy	Silver
1A5018-10-R	Copper alloy	Bright tin

* BeCu 1A3399 fuseclips recommended for more than 15 A.

1A5601 5 mm fuseclip (≤ 7 A)

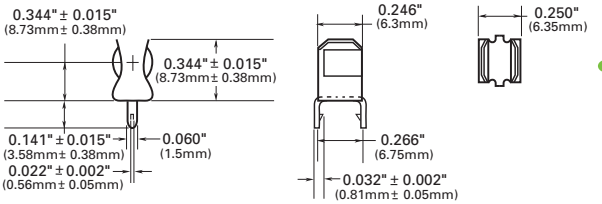

Catalog no.	Material	Finish
1A5601	Cartridge brass	Bright tin

1A5602 fuseclip with end stops (≤ 7 A)

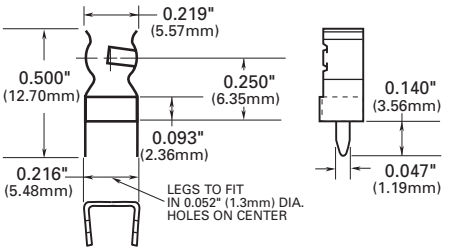

Catalog no.	Material	Finish
1A5602	Cartridge brass	Bright tin

Data sheet no. 2110

Data sheet no. 2131

1A1119 1/4" fuseclips with end stops and angled-in leads

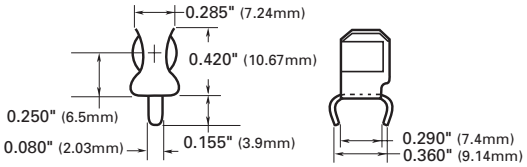

Catalog no.	Material*	Finish
1A1119-04-R	High performance copper	Bright tin
1A1119-05	High performance copper	Silver
1A1119-10-R	Cartridge brass	Bright tin

* High performance copper recommended for more than 15 A.

1A3398 PCB 1/4" fuseclips without end stops with straight leads

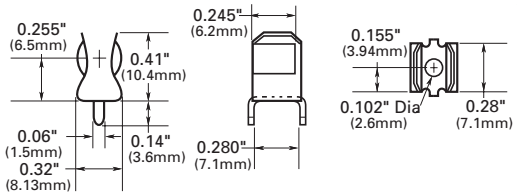

Catalog no.	Material	Finish
1A3398-07-R	Cartridge brass	Bright tin

1A1120 1/4" fuseclips without end stops or angled-in leads

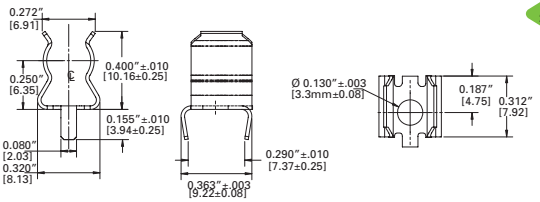

Catalog no.	Material*	Finish
1A1120-02	Cartridge brass	None/bright dipped
1A1120-05	High performance copper	Silver
1A1120-06-R	High performance copper	Bright tin
1A1120-09-R	Cartridge brass	Bright tin

* High performance copper recommended for more than 15 A.

1A4533 1/4" fuseclips without end stops or angled out leads

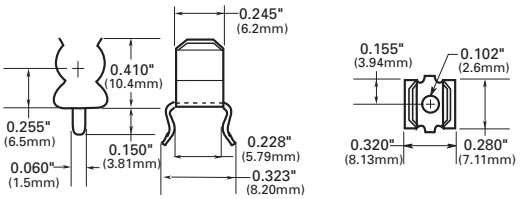

Catalog no.	Material*	Finish
1A4533-01-R	High performance copper	Bright tin
1A4533-06-R	Cartridge brass	Bright tin

* High performance copper recommended for more than 15 A.

1A1907 1/4" fuseclips with end stops and straight leads

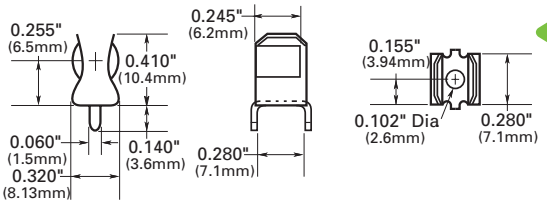

Catalog no.	Material*	Finish
1A1907-02	Cartridge brass	None/bright dipped
1A1907-03-R	High performance copper	Bright tin
1A1907-05	High performance copper	Silver
1A1907-06-R	Cartridge brass	Bright tin

* High performance copper recommended for more than 15 A.

1A4534 1/4" fuseclips with end stops and angled out leads

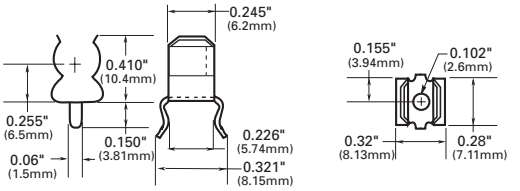

Catalog no.	Material*	Finish
1A4534-01-R	High performance copper	Bright tin
1A4534-06-R	Cartridge brass	Bright tin

* High performance copper recommended for more than 15 A.

5681 and 5682 1/4" fuseclips with mounting holes

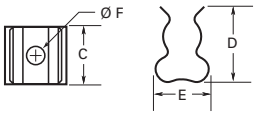

Figure 1

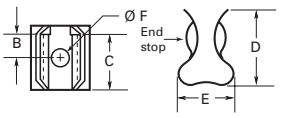

Figure 2

RoHS 2011/65/EU

Catalog no.	Clip mat.	Finish	Dimensions - in B	C	D	E	Ø F	Ref.
Without end stop								
5681-01	BeCu	Silver	†	0.265	0.41	0.32	0.132	Fig. 1
With end stop								
5682-01	BeCu	Silver	0.108	0.262	0.41	0.32	0.132	Fig. 2
5682-02			0.131					
5682-11-R	BeCu	Bright tin	0.106					

† Hole in center of both clip and contact area.

Data sheet no. 2132

5674 PCB fuseclips with mounting holes for 9/32˝ dia. fuses

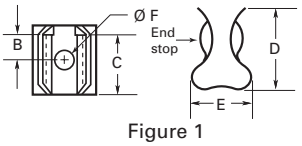

Figure 1

RoHS 2011/65/EU

Catalog no.	Clip mat.	Finish	Dimensions - in B	C	D	E	Ø F	Ref.
With end stop								
5674-01	BeCu	Silver	0.168	0.356	0.52	0.38	0.172	Fig. 1
5674-10		Bright tin						

Data sheet no. 2132

5960 PCB fuseclips with mounting holes for 13/32˝ dia. fuses

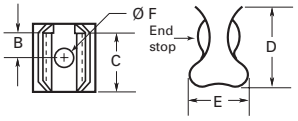

Figure 1

RoHS 2011/65/EU

Catalog no.	Clip mat.	Finish	Dimensions - in B	C	D	E	Ø F	Ref.
With end stop								
5960-07	BeCu	Silver	0.168	0.387	0.71	0.47	0.196	Fig. 1
5960-09			0.2				0.172	

Data sheet no. 2132

5592 PCB fuseclips with mounting holes for 9/16˝ dia. fuses

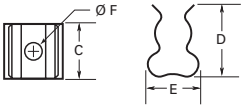

Figure 1

RoHS 2011/65/EU

Catalog no.	Clip mat.	Finish	Dimensions - in B	C	D	E	Ø F	Ref.
Without end stop								
5592-01	BeCu	Silver	0.252	0.56	0.875	0.6	0.2	Fig. 1

Data sheet no. 2132

1A3400 fuseclips with end stops and straight leads for 13/32˝ dia. fuses

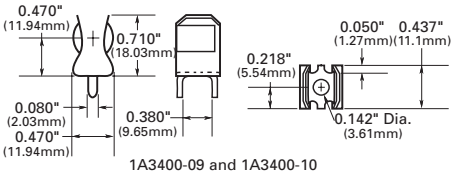

1A3400-09 and 1A3400-10

RoHS 2011/65/EU

Catalog no.	Clip mat.	Finish	Max amps
1A3400-09-R	Copper-clad steel	Bright tin	20
1A3400-10-R	Copper-clad steel	Silver	30

Data sheet no. 2131

Contents

Fuse type	Volts	Amp range	Catalog symbol/size	Section page
Compact high speed fuses				
Fuses	500 Vac/dc	50 to 400	CHSF	3
UL Class J full range drive fuse				
Fuses	600 Vac/450 Vdc	1 to 600	DFJ	4
North American fuses				
Fuses	130 Vac/dc	1000 to 4000	FWA	5
	150 Vac/dc	70 to 1000	FWA	6
	250 Vac/dc	35 to 2500	FWX	7
	500 Vac/dc	35 to 1600	FWH	8
	600 Vac	1 to 1000	KAC	9
	600 Vac	35 to 800	KBC	10
	700 Vac/dc	5 to 1200	FWP	11-12
	1000 Vac/800 Vdc	35 to 2000	FWJ	13
Accessories	Modular fuse blocks			14
British Standard BS88 fuses				
Fuses	240-250-280 Vac/150 Vdc	6 to 180	LCT, LET	15
	240-250 Vac/150 Vdc	160 to 900	LMT, LMMT	16
	690-700 Vac/500 Vdc	6 to 200	CT, ET, FE, EET and FEE	17-18
	690-700 Vac/350-450-500 Vdc	160 to 710	FM, FMM, MT and MMT	19-20
Accessories	Trip indicators, clips and microswitches			21

Continued next page

Lead the charge with compact designs

Bussmann series 50-400 amp compact high speed fuses use up to 48% less enclosure space

Contents

Fuse type	Volts	Amp range	Catalog symbol/size	Section page
Ferrule				
Fuses	150 Vac/dc	5 to 30	FWA-_A10F (10x38mm)	22
	150 Vac/dc	35 to 60	FWA-_A21F (21x51mm)	
	250 Vac/dc	1 to 50	FWX (14x51mm)	23
	500 Vac	0.25 to 30	FWH-_A6F (6x32mm)	24
	500 Vac/dc	1 to 30	FWH-_14F (14x51mm)	25
	600-700 Vac/700 Vdc	1 to 32	FWC (10x38mm)	26
	690 Vac	4 to 32	FWP-_G10F (10x38mm)	27
	690-700 Vac/600-700 Vdc	1 to 50	FWP-_A14F (14x51mm)	28
	690 Vac	4 to 50	FWP-_G14F_ (14x51mm)	29
	700 Vac/dc	20 to 100	FWP-_A22F (22x58mm)	30
	690 Vac	20 to 100	FWP-_G22F_ (22x58mm)	31
	750 Vdc	5 to 30	FWK-_A20F (20x127mm)	32
	750 Vdc	35-60	FWK-_A25F (25x146mm)	
	1000 Vac/800 Vdc	20 to 30	FWJ (14x67mm)	33
	1200 Vac/1000 Vdc	20 to 30	FWL (20x127mm)	34
	1400-2000 Vac/1000 Vdc	2 to 15	FWS (20x127mm)	35
Accessories	J70032 700 V panel mount block for FWP 14x51mm fuses			36
	JM70100 700 V DIN-Rail/panel mount modular blocks for FWP 22x58mm fuses			
	CHM modular holders for FWA and FWC 10x38mm fuses			
	CH14 modular holders for FWX, FWH and FWP 14x51mm fuses			37
	CH22 modular holders for FWP 22x58mm fuses			
Square body				
DIN 43653	690-700 Vac/ 700 Vdc	10 to 400	170M — size 000 and 00	38-39
	690-700 Vac	40 to 2000	170M — size 1* to 3	40-41
	1000 Vac	20 to 315	170M — size 00	42
	1000 Vac	50 to 1400	170M — size 1* to 3	43-44
	1250-1300 Vac	50 to 1400	170M — size 1* to 3	45-46
DIN 43620	690 Vac	10 to 800	170M — size 00 to 3	47-48
	690-700 Vac	10 to 1600	170M — size 000 to 3 dual indicator	49-50
	1000 Vac	20 to 225	170M — size 00	51
French style	690-700 Vac	40 to 1600	170M — size 1* to 3	52-53
US style	690-700 Vac	40 to 2000	170M — size 1* to 3	54-55
	1000 Vac	50 to 1400	170M — size 1* to 3	56-57
	1250-1300 Vac	50 to 1400	170M — size 1* to 3	58-59
Flush-end contact	690 Vac	25 to 400	170M — size 00	60
	690-700 Vac	40 to 2000	170M — size 1* to 3	61-62
	1000 Vac	50 to 1400	170M — size 1* to 3	63-64
	1250-1300 Vac	50 to 1400	170M — size 1* to 3	65-66
	690-700 Vac	1000 to 4000	170M — size 4	67-68
	1000 Vac	1000 to 3000	170M — size 4	69
	1250 Vac	800 to 2500	170M — size 4	70
	660 Vac	1000 to 4000	170M — size 23	71-72
	1250 Vac	630 to 2800	170M — size 23	73
	690 Vac	2000 to 7500	170M — size 24	74
	1000 Vac	2000 to 5000	170M — size 24	75
Accessories	Fixed center blocks for DIN 43653 fuses			76-77
	Indicators			78
	Microswitches			78
IGBT fuses				
Fuses	750-800 Vdc	25 to 630	170M — size 000 and 230	79-80
	1000 Vdc	25 to 500	170M — size 000 and 230	81-82

CHSF — UL compact high speed fuse

500 Vac/dc (UL), 50 to 400 A

Bussmann™ series compact high speed fuses feature space-saving case sizes for protecting semiconductor devices up to 500 Vac/dc in ratings from 50 to 400 amps.

Ratings

- Volts
  - 500 Vac/dc (UL)
- Amps 50-400 A
- Interrupting rating
  - Max AC – 200 kA
  - Min AC 400%
  - Max DC – 50 kA
  - Min DC 800%

Operating class aR

Agency information

- UL Recognized, Guide JFHR2, File E56412
- CSA Component Acceptance, Class 1422-30, File 53787
- IEC aR (self certified)
- RoHS compliant
- CE

Features

- Requires up to 48% less enclosure space to help reduce the overall assembly size
- Innovative design allows for a significantly smaller package without compromising heat rise performance, preventing extensive equipment redesign
- Global acceptance with UL, CSA, IEC and RoHS for products sold worldwide
- Bolt-on design provides design flexibility for installation in fuse blocks or direct mounting on busbars
- Meets JASO D622 spec for thermal shock, humidity, and vibration
- Superior current cycling performance helps withstand demanding applications

Recommended fuse blocks
Up to 100 amps

Catalog no.	AWG wire size	Stud size
BH-0111	14-2/0 Cu	1/4-20
BH-0112	14-2/0 Cu	5/16-18
BH-0121	(2) 14-1/0 Cu	1/4-20
BH-0122	(2) 14-1/0 Cu	5/16-18
1BS101	14-2/0 Cu	1/4-20 x 1/2
See data sheet no. 1200 (BH-01_) and 1206 (1BS101) for details.		

Up to 400 amps

Catalog no.	AWG wire size	Stud size
BH-1131	6-250kcmil Cu	1/4-20
BH-1132	6-250kcmil Cu	5/16-18
1BS102	6-250kcmil Cu	1/4-20 x 1/2
See data sheet no. 1201 (BH-11_) and 1207 (1BS102) for details.		

Catalog no.	Amps	AC/DC I^2t (A^2s) pre-arcing	AC* I^2t (A^2s) total clear	DC** I^2t (A^2s) total clear	Watts loss / percent of rated current @ 80%	@ 50%
CHSF-50	50	304	1875	935	3.8	1.3
CHSF-60	60	438	2700	1346	4.5	1.5
CHSF-70	70	596	3675	1833	5.3	1.8
CHSF-80	80	778	4800	2394	6.1	2.0
CHSF-100	100	1216	7500	3740	7.6	2.5
CHSF-125	125	2042	12,721	6465	12.0	3.6
CHSF-150	150	2941	18,318	9309	14.3	4.3
CHSF-175	175	4003	24,933	12,671	16.7	5.1
CHSF-200	200	5228	32,566	16,550	19.1	5.8
CHSF-225	225	6835	48,028	21,278	26.1	7.0
CHSF-250	250	8438	59,293	26,270	29.0	7.8
CHSF-300	300	12,151	85, 382	37,828	34.8	9.4
CHSF-350	350	16,539	116,215	51,488	40.6	10.9
CHSF-400	400	21,603	151,791	67,250	46.4	12.5

* @ 200 kA/500 Vac.
**@ 50 kA/500 Vdc.

Dimensions — mm

Amps	A	B	C	D1	D2	E	F	G	H
50-100	81	20	40	61	57	8.7	16	7.7	3.2
125-200	92	25	53	77	68	8.7	19	7.8	3.2
225-400	92	30	53	74	68	8.7	25	9.0	4.8

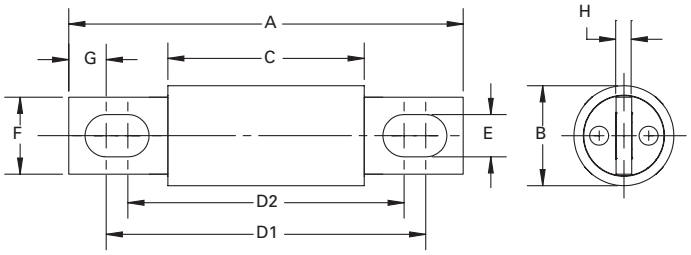

Data sheet no. 10414

DFJ — UL Class J full range high speed fuse

600 Vac/450 Vdc (UL), 1 to 600 A

UL Class J high speed, full range current-limiting fuses provide maximum protection for AC and DC drives and controllers. The UL Class J Bussmann series DFJ fuse has the lowest I^2t of any branch circuit fuse to protect power semiconductor devices that utilize diodes, GTOs, SCRs and SSRs. The DFJ fuse combines the performance of high speed fuses in a full range Class J branch circuit package, allowing the use of readily available Class J fuse blocks, holders and switches. The DFJ uses standard Class J holders and blocks. See section 8 for available catalog numbers.

Ratings

- Volts
  - 600 Vac (UL)
  - 450 Vdc (UL 15-600 A)
- Amps 1-600 A
- IR
  - 200 kA RMS Sym.
  - 100 kA DC

Operating class gR

Agency information

- UL Listed, Std 248-8, Class J, Guide JDDZ, File E4273
- CSA Certified, C22-2 No 248.8, Class 1422-02, File 53787
- CE

Dimensions — in

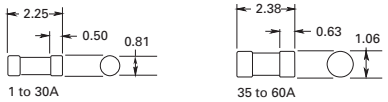

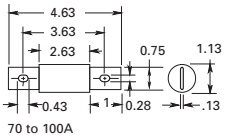

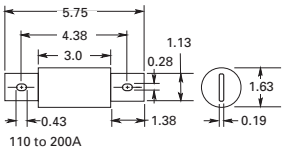

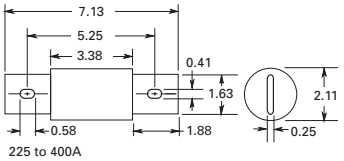

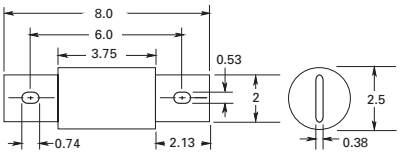

Catalog no.	Amps	I^2t (A^2Sec) @ 600 Vac/100 kA Pre-arc	Clearing	Watts loss*
DFJ-1	1	—	—	—
DFJ-2	2	—	—	—
DFJ-3	3	—	—	—
DFJ-4	4	—	—	—
DFJ-5	5	—	—	—
DFJ-6	6	—	—	—
DFJ-8	8	—	—	—
DFJ-10	10	—	—	—
DFJ-12	12	—	—	—
DFJ-15	15	4	110	4.1
DFJ-17.5	17.5	—	—	—
DFJ-20	20	8	365	4.0
DFJ-25	25	12	610	4.9
DFJ-30	30	20	1000	5.5
DFJ-35	35	55	1100	6.8
DFJ-40	40	90	1900	8.6
DFJ-50	50	140	2800	8.7
DFJ-60	60	290	6000	8.5
DFJ-70	70	450	3100	12
DFJ-80	80	650	4600	13
DFJ-90	90	1010	7200	13
DFJ-100	100	1460	10,500	13
DFJ-110	110	1710	9500	17
DFJ-125	125	3580	20,000	15
DFJ-150	150	5080	28,000	19
DFJ-175	175	6310	35,000	23
DFJ-200	200	9850	54,500	24
DFJ-225	225	11,420	51,000	29
DFJ-250	250	17,000	74,500	30
DFJ-300	300	23,500	103,000	36
DFJ-350	350	38,800	170,000	39
DFJ-400	400	62,200	272,000	40
DFJ-450	450	44,600	270,000	56
DFJ-500	500	79,500	480,000	52
DFJ-600	600	138,000	830,000	57

† Watts loss at rated current.

Data sheet no. 1048

FWA — North American

130 Vac/dc (UL), 1000 to 4000 A

North American style flush-end high speed fuses for the protection of DC common bus, DC drives, power converters/rectifiers and reduced rated voltage starters.

Ratings

- Volts 130 Vac/dc
- Amps 1000-4000 A
- IR
  - 200 kA RMS Sym at 130 Vac
  - 50 kA at 130 Vdc

Agency information

- UL Recognized, JFHR2, E91958 on 1000-2000 A fuses
- CE

Rated voltage	Rated current (amps)	I^2t (A^2s) Pre-arcing	I^2t (A^2s) Clearing at 130 Vac	Watts loss (W)†	Catalog no.
130 Vac/dc (UL)	1000	170,000	460,000	60	FWA-1000AH
	1200	270,000	730,000	70	FWA-1200AH
	1500	520,000	1,400,000	78	FWA-1500AH
	2000	860,000	2,400,000	108	FWA-2000AH
	2500	1,500,000	4,100,000	130	FWA-2500AH
	3000	2,100,000	5,700,000	150	FWA-3000AH
	4000	3,400,000	9,200,000	257	FWA-4000AH

† Watts loss at rated current.

Dimensions — in

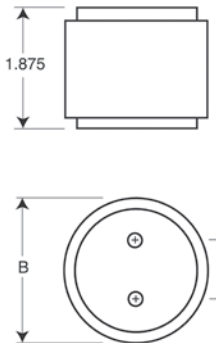

1000-3000 A

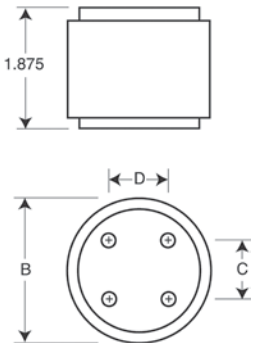

4000 A

Amp range	B	C	D	Thread / depth
1000 to 2000	2.0	1.0	—	3/8-24 x 1/2″ UNF
2500 to 3000	3.0	1.5	—	1/2-20 x 1/2″ UNF
4000	3.5	1.5	1.5	1/2-20 x 1/2″ UNF

1″ = 25.4mm

For details on electrical characteristics, contact Application Engineering and ask for data sheets: 720001, 5785301

FWA — North American

150 Vac/dc (UL), 70 to 1000 A

North American style bolted tag high speed fuses used for the protection of DC common bus, DC drives, power converters / rectifiers and reduced rated voltage starters.

Ratings

- Volts
  - 150 Vac/dc (UL)
  - 80 Vdc 1000 A only
- Amps 70-1000 A
- IR
  - 100 kA RMS Sym. (70-400 A)
  - 200 kA RMS Sym. (450-1000 A)
  - 20 kA at 150 Vdc (70-800 A)
  - 100 kA at 80 Vdc (70-1000 A)

Agency information

- UL Recognized JFHR2, E91958
- CE

Rated voltage	Rated current (amps)	I^2t (A^2s) Pre-arcing	I^2t (A^2s) Clearing at 150 Vac	Watts loss (W)†	Catalog no.
150 Vac/dc (UL)	70	470	4000	6.9	FWA-70B
	80	670	6000	7.7	FWA-80B
	100	1200	12,000	9.0	FWA-100B
	125	1870	18,000	11.2	FWA-125B
	150	2700	26,000	13.5	FWA-150B
	200	4780	45,000	17.6	FWA-200B
	250	7470	70,000	22.5	FWA-250B
	300	10,760	100,000	27.0	FWA-300B
	350	15,700	140,000	30.6	FWA-350B
	400	20,300	180,000	35.2	FWA-400B
	500	39,000	120,000	35.0	FWA-500A
	600	46,000	140,000	47.0	FWA-600A
	700	75,000	220,000	49.0	FWA-700A
	800	92,000	280,000	58.0	FWA-800A
80 Vdc	1000	170,000	510,000	60.0	FWA-1000A

† Watts loss at rated current.

Dimensions — mm

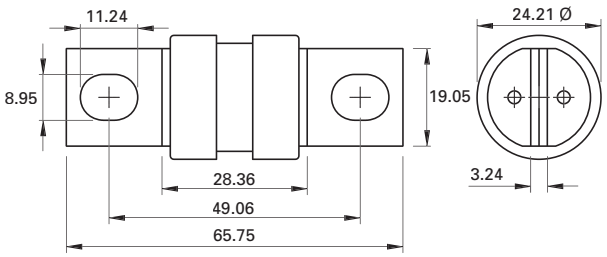

70-400 A

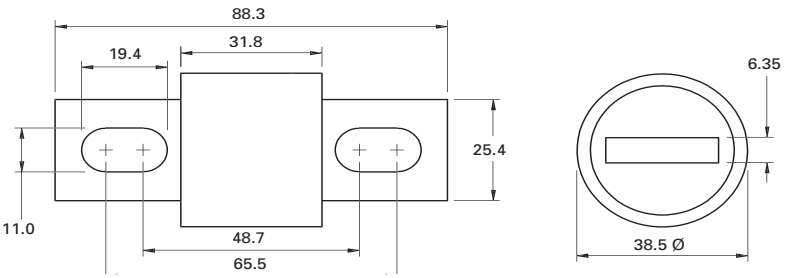

500-1000 A

For details on electrical characteristics, contact Application Engineering and ask for data sheets: 720002, 5785310

FWX — North American

250 Vac/dc (UL), 35 to 2500 A

North American style bolted tags and flush-end high speed fuses for the protection of DC common bus, DC drives, power converters/ rectifiers and reduced rated voltage starters.

Ratings

- Volts 250 Vac/dc (UL)
- Amps 35-2500 A
- IR
  - 200 kA RMS Sym.
  - 20 kA at 250 Vdc (35-800 A)

Agency information

- UL Recognized, JFHR2, E56412
- CSA Class 1422-30, (53787) on 35-800 A fuses (20 kA IR at 250 Vdc)
- CE

Dimensions — in

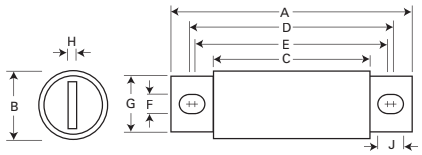

35-800 A

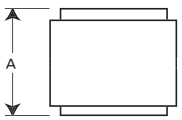

1000-1200 A

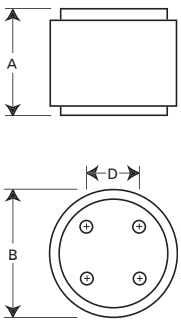

1500-2500 A

Amp range	A	B	C	D	E	F	G	H	J	Thread / depth
35-60	3.19	0.81	1.59	2.59	2.25	0.34	0.63	0.13	0.52	—
70-200	3.13	1.22	1.59	2.44	2.19	0.34	1.00	0.19	0.47	—
225-600	3.84	1.50	1.59	2.94	2.25	0.41	1.00	0.25	0.75	—
700-800	3.84	2.00	1.59	3.03	2.28	0.41	1.50	0.25	0.78	—
1000-1200	2.59	3.00	1.50	—	—	—	—	—	—	3/8-24 x 1/2" UNF
1500-2500	2.59	3.50	1.50	1.50	—	—	—	—	—	

1" = 25.4mm

Rated voltage	Rated current (amps)	I^2t (A^2s) Pre-arcing	I^2t (A^2s) Clearing at 250 Vac	Watts loss (W)†	Catalog no.
250 Vac/dc (UL)	35	50	230	4.2	FWX-35A
	40	60	310	5.2	FWX-40A
	45	80	390	5.7	FWX-45A
	50	100	520	6.0	FWX-50A
	60	140	740	8.1	FWX-60A
	70	330	1400	7.2	FWX-70A
	80	430	1850	8.1	FWX-80A
	90	570	2450	9.0	FWX-90A
	100	740	3150	10.0	FWX-100A
	125	1130	4850	12.5	FWX-125A
	150	1620	6950	15.7	FWX-150A
	175	2170	9300	18.5	FWX-175A
	200	2790	12,000	22.0	FWX-200A
	225	3210	14,700	24.0	FWX-225A
	250	3960	18,100	27.0	FWX-250A
	275	4720	21,600	31.0	FWX-275A
	300	6000	27,300	32.0	FWX-300A
	350	10,600	48,600	39.0	FWX-350A
	400	14,500	66,100	44.0	FWX-400A
	450	22,100	101,000	49.0	FWX-450A
	500	28,000	128,000	54.0	FWX-500A
	600	41,100	188,000	62.0	FWX-600A
	700	48,800	190,000	72.0	FWX-700A
	800	59,000	230,000	84.0	FWX-800A
	1000	44,000	360,000	100.0	FWX-1000AH
	1200	92,000	750,000	103.0	FWX-1200AH
	1500	120,000	880,000	140.0	FWX-1500AH
	1600	160,000	1,200,000	140.0	FWX-1600AH
	2000	320,000	2,300,000	151.0	FWX-2000AH
	2500	670,000	4,700,000	163.0	FWX-2500AH

† Watts loss at rated current.

For details on electrical characteristics, contact Application Engineering and ask for data sheets:720005, 359 (35-800 A), 5785299 (100-2500 A)

FWH — North American

500 Vac/dc (UL), 35 to 1600 A

North American style bolted tags high speed fuses, for the protection of DC common bus, power converters/rectifiers and reduced rated voltage starters.

Ratings

- Volts
  - 500 Vac (UL)
  - 500 Vdc (35-800 A only)
- Amps 35-1600 A
- IR
  - 200 kA RMS Sym.
  - 50 kA at 500 Vdc

Agency information

- UL Recognized, JFHR2, E91958, FWH-_B (35-200 A) and FWH-_A (1000 and 1200 A), JFHR2, E56412 FWH-_A (225-800 A)
- CSA Class 1422-30, File 53787 (35-1600 A)
- CE

Dimensions — in

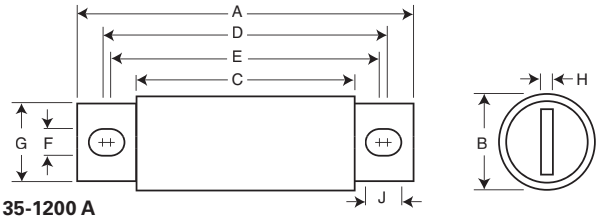

35-1200 A

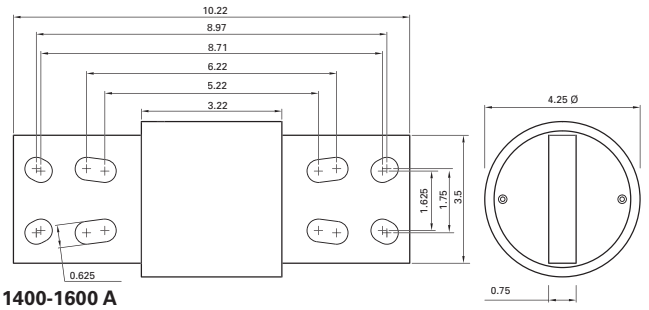

1400-1600 A

Amp range	A	B	C	D	E	F	G	H	J
35-60	3.19	0.81	1.59	2.54	2.19	0.34	0.72	0.13	0.52
70-100	3.62	0.95	1.74	2.85	2.81	0.35	0.75	0.13	0.38
125-200	3.62	1.16	1.84	2.89	2.77	0.34	1.00	0.19	0.41
225-400	4.34	1.50	2.09	3.44	2.75	0.41	1.00	0.25	0.75
450-600	4.34	2.00	2.09	3.53	2.78	0.41	1.50	0.25	0.78
700-800	6.34	2.50	2.09	4.97	3.44	0.53	2.00	0.38	1.30
1000-1200	6.97	3.00	3.22	5.47	4.48	0.62	2.38	0.44	1.12
1400-1600	Refer to drawing								

1″ = 25.4mm

Rated voltage	Rated current (amps)	I²t (A²s) Pre-arcing	I²t (A²s) Clearing at 500 Vac	Watts loss (W)†	Catalog no.
500 Vac/dc (UL)	35	34	150	8.0	FWH-35B
	40	76	320	7.5	FWH-40B
	45	105	450	7.5	FWH-45B
	50	135	670	7.5	FWH-50B
	60	210	900	9.9	FWH-60B
	70	210	900	10.6	FWH-70B
	80	305	1400	12.7	FWH-80B
	90	360	1600	15.0	FWH-90B
	100	475	2000	17.0	FWH-100B
	125	800	3500	25.0	FWH-125B
	150	1100	4600	30.0	FWH-150B
	175	1450	6200	35.0	FWH-175B
	200	1900	8500	40.0	FWH-200B
500 Vac/dc (UL)	225	4600	23,300	39.0	FWH-225A
	250	6300	32,200	41.0	FWH-250A
	275	7900	40,300	46.0	FWH-275A
	300	9800	49,800	51.0	FWH-300A
	325	13,700	63,800	53.0	FWH-325A
	350	14,500	72,900	58.0	FWH-350A
	400	19,200	96,700	65.0	FWH-400A
	450	24,700	127,000	74.0	FWH-450A
	500	29,200	149,000	84.0	FWH-500A
	600	41,300	206,000	108.0	FWH-600A
	700	55,000	298,000	120.0	FWH-700A
	800	76,200	409,000	129.0	FWH-800A
500 Vac (UL)	1000	92,000	450,000	145.0	FWH-1000A
	1200	122,000	600,000	180.0	FWH-1200A
	1400	200,000	1,000,000	210.0	FWH-1400A
	1600	290,000	1,400,000	230.0	FWH-1600A

† Watts loss at rated current.

For details on electrical characteristics, contact Application Engineering and ask for data sheets: 720007, 360 (225-800 A), 5785304 (35-200 A, 1000-1600 A)

KAC — North American

600 Vac (UL), 1 to 1000 A

North American style bolted tags high speed fuses. These fuses are supplied as replacements only. For new installations, Eaton recommends the 700 V FWP. See page 4-11.

Ratings

- Volts 600 Vac
- Amps 1-1000 A
- IR 200 kA RMS Sym.

Agency information

- UL Recognized, JFHR2, E56413 (1-600 A only)
- CE

Rated voltage	Rated current (amps)	Catalog no.
	1	KAC-1
	2	KAC-2
	3	KAC-3
	4	KAC-4
	5	KAC-5
	6	KAC-6
	7	KAC-7
	8	KAC-8
	9	KAC-9
	10	KAC-10
	12	KAC-12
	15	KAC-15
	17.5	KAC-17.5
	20	KAC-20
	25	KAC-25
	30	KAC-30
	35	KAC-35
	40	KAC-40
	45	KAC-45
	50	KAC-50
600 Vac (UL)	60	KAC-60
	70	KAC-70
	80	KAC-80
	90	KAC-90
	100	KAC-100
	110	KAC-110
	125	KAC-125
	150	KAC-150
	175	KAC-175
	200	KAC-200
	225	KAC-225
	250	KAC-250
	300	KAC-300
	350	KAC-350
	400	KAC-400
	450	KAC-450
	500	KAC-500
	600	KAC-600
	700	KAC-700
	800	KAC-800
	1000	KAC-1000

Dimensions — in

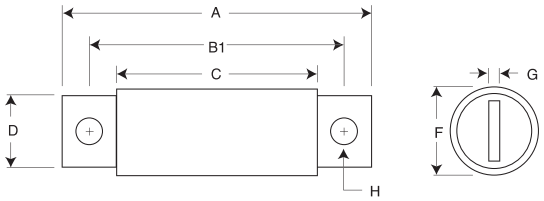

1-30 A and 450-1000 A

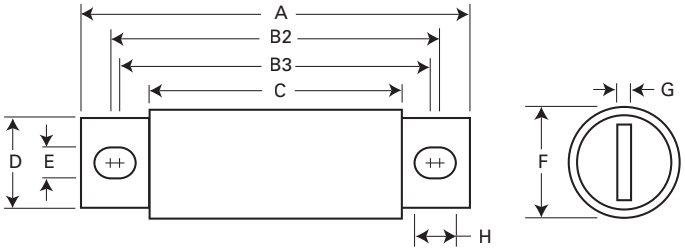

35-400 A

Amp range	A	B1	B2	B3	C	D	E	F	G	H
1-30	2.88	2.50	—	—	1.88	0.41	—	0.56	0.06	0.26
35-60	4.38	—	3.75	3.50	2.75	0.63	0.34	0.81	0.09	0.47
70-100	5.00	—	4.06	3.66	2.75	0.75	0.41	1.00	0.13	0.61
110-200	5.14	—	4.39	3.77	2.91	1.00	0.41	1.50	0.19	0.72
225-400	6.18	—	4.82	4.57	3.00	1.63	0.56	2.00	0.25	0.69
450-800	6.25	4.75	—		3.06	2.00	—	2.50	0.25	0.56
1000	7.25	4.75	—		3.06	2.75	—	3.50	0.38	0.56

1 ″ = 25.4mm

Data sheet no. 720009

KBC — North American

600 Vac (UL), 35 to 800 A

North American style bolted tags and flush-end high speed fuses. These fuses are supplied as replacements only. For new installations, Eaton recommends the 700 V FWP fuses. See page 4-11.

Ratings

- Volts 600 Vac (UL)
- Amps 35-800 A
- IR 200 kA RMS Sym.

Agency information

- UL Recognized, JFHR2, E56412 (35-600 A only)
- CE

Rated voltage	Rated current (amps)	Catalog no.
	35	KBC-35
	40	KBC-40
	45	KBC-45
	50	KBC-50
	60	KBC-60
	70	KBC-70
	80	KBC-80
	90	KBC-90
	100	KBC-100
	110	KBC-110
	125	KBC-125
600 Vac (UL)	150	KBC-150
	175	KBC-175
	200	KBC-200
	225	KBC-225
	250	KBC-250
	300	KBC-300
	350	KBC-350
	400	KBC-400
	450	KBC-450
	500	KBC-500
	600	KBC-600
	800	KBC-800

Dimensions — in

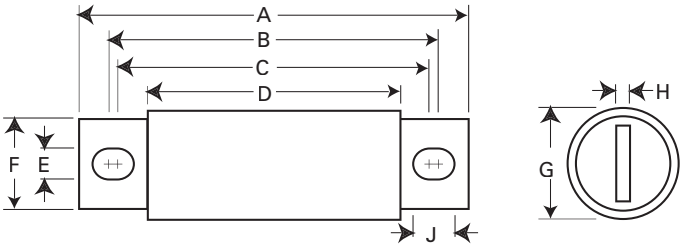

35-60 and 110-600 A

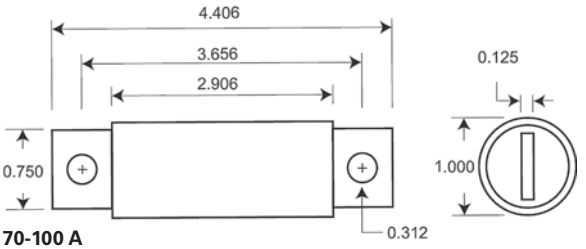

70-100 A

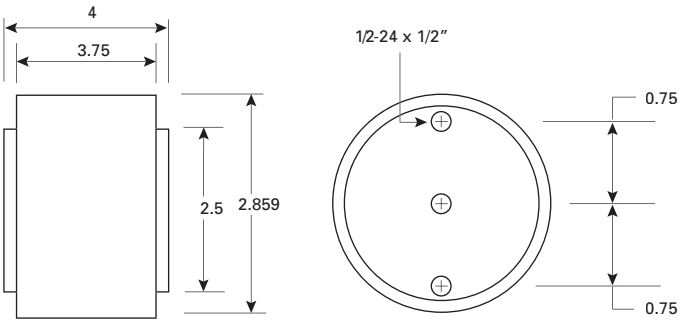

800 A

Rated current (amps)	A	B	C	D	E	F	G	H	J
35-60	4.38	3.75	3.50	2.75	0.34	0.63	0.81	0.09	0.47
70-100	Refer to drawing								
110-200	4.41	3.72	3.59	2.91	0.31	0.88	1.22	0.19	0.38
225-400	5.13	4.19	3.56	2.91	0.41	1.00	1.50	0.25	0.72
450-600	5.13	4.39	3.69	2.88	0.41	1.50	2.00	0.25	0.76
800	Refer to drawing								

1" = 25.4mm

Data sheet no. 720010

FWP — North American

700 Vac/dc (UL), 5 to 1200 A

North American style bolted tags high speed fuses for the protection of DC common bus, DC drives, power converters/rectifiers, reduced rated voltage starters.

Ratings

- Volts 700 Vac/dc (UL)
- Amps 5-1200 A
- IR
  - 200 kA RMS Sym.
  - 50 kA at 700 Vdc (Type A)
  - 50 kA at 500 Vdc (Type B)

Agency information

- UL Recognized, JFHR2, E91958 FWP-_B (5-100 A, 700-1200 A), JFHR2, E56412 FWP-_A (125-600 A)
- CSA Class 1422-30, (53787) on 5-800 A
- CE

Rated voltage	Rated current (amps)	I²t (A²s) Pre-arcing	I²t (A²s) Clearing at 700 Vac	Watts loss (W)†	Catalog no.
	5	1.6	11	1.5	FWP-5B
	10	3.6	22	4.0	FWP-10B
	15	10.0	70	5.5	FWP-15B
	20	26.0	180	6.0	FWP-20B
	25	44.0	320	7.0	FWP-25B
	30	58.0	450	9.0	FWP-30B
	35	34.0	160	12.0	FWP-35B
	40	76.0	320	12.0	FWP-40B
	50	135.0	600	12.0	FWP-50B
	60	210.0	950	15.5	FWP-60B
	70	305.0	2000	18.0	FWP-70B
	80	360.0	2400	21.0	FWP-80B
	90	415.0	2700	25.0	FWP-90B
	100	540.0	3500	27.0	FWP-100B
	125	1800.0	7300	28.0	FWP-125A
700 Vac/dc (UL)	150	2900.0	11,700	32.0	FWP-150A
	175	4200.0	16,700	35.0	FWP-175A
	200	5500.0	22,000	43.0	FWP-200A
	225	7700.0	31,300	45.0	FWP-225A
	250	10,500.0	42,500	48.0	FWP-250A
	300	17,600.0	71,200	58.0	FWP-300A
	350	23,700.0	95,600	65.0	FWP-350A
	400	31,000.0	125,000	78.0	FWP-400A
	450	36,400.0	137,000	94.0	FWP-450A
	500	45,200.0	170,000	107.0	FWP-500A
	600	66,700.0	250,000	122.0	FWP-600A
	700	54,000.0	300,000	125.0	FWP-700A
	800	78,000.0	450,000	140.0	FWP-800A
	900	91,500.0	530,000	150.0	FWP-900A
	1000	120,000.0	600,000	170.0	FWP-1000A
	1200	195,000.0	1,100,000	190.0	FWP-1200A

† Watts loss at rated current.

For details on electrical characteristics, contact Application Engineering and ask for data sheets: 720012, 5785316 (5-30 A), 361 (125-600 A), 5785308 (35-100 A, 700-1200 A)

FWP — North American

700 Vac/dc (UL), 5 to 1200 A

Dimensions — in

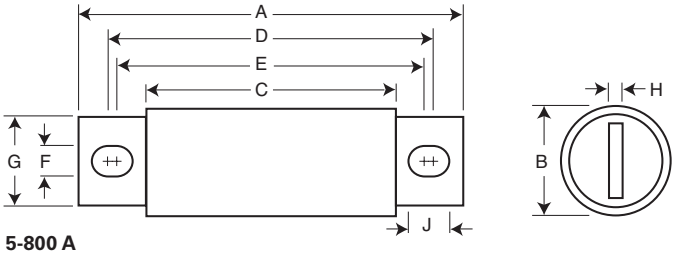

5-800 A

Amp range	A	B	C	D	E	F	G	H	J
5-30	2.87	0.56	1.86	2.48	2.48	0.25	0.41	0.06	0.25
35-60	4.38	0.81	2.75	3.71	3.31	0.34	0.73	0.13	0.54
70-100	4.41	0.95	2.59	3.63	3.56	0.34	0.75	0.13	0.38
125-200	5.09	1.50	2.84	4.19	3.5	0.41	1.00	0.25	0.75
225-400	5.09	2.00	2.84	4.28	3.53	0.41	1.50	0.25	0.78
450-600	7.09	2.50	2.84	5.72	4.19	0.53	2.00	0.38	1.30
700-800	6.63	2.00	2.76	5.56	5.06	0.63	1.50	0.25	0.88
900-1000	Refer to drawing								
1200									

1″ = 25.4mm

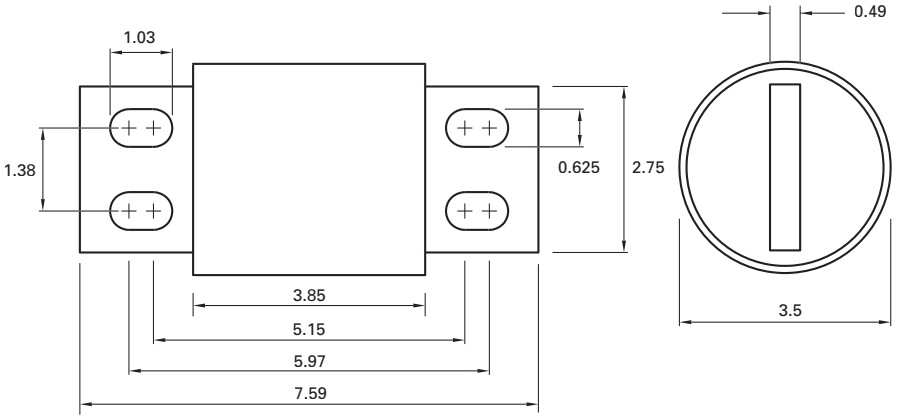

900-1000 A -mm

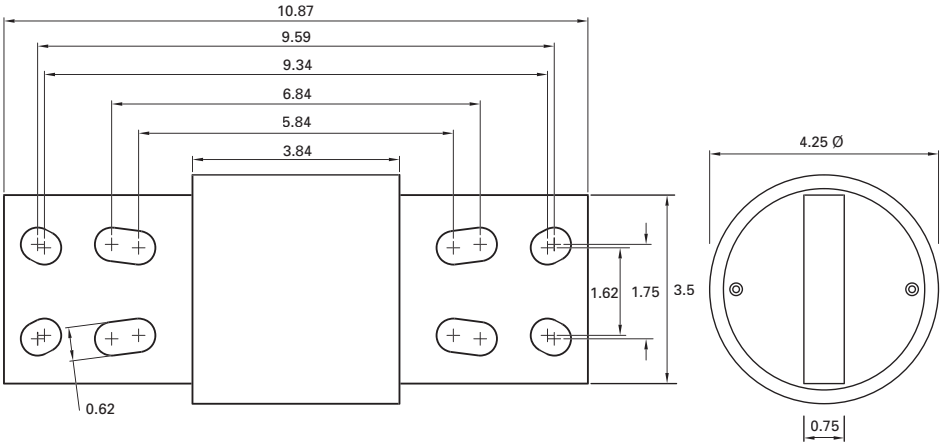

1200 A -mm

For details on electrical characteristics, contact Application Engineering and ask for data sheets: 720012, 5785316 (5-30 A), 361 (125-600 A), 5785308 (35-100 A, 700-1200 A)

FWJ — North American

1000 Vac /800 Vdc (UL), 35 to 2000 A

North American style bolted tags high speed fuses for the protection of DC common bus, DC drives power converters/rectifiers, reduced rated voltage starters and high voltage traction inverters.

Ratings

- Volts
  - 1000 Vac
  - 800 Vdc
- Amps 35-2000 A
- IR
  - 25 kA RMS Sym. (35-200 A)
  - 100 kA RMS Sym. (250-2000 A)
  - 50 kA at 800 Vdc (35-200 A and 450-600 A)

Agency information

- UL Recognized, JFHR8, E91958 on 50-600 A only
- CE

Rated voltage	Rated current (amps)	I²t (A²s) Pre-arcing	I²t (A²s) Clearing at 1000 Vac	Watts loss (W)†	Catalog no.
1000 Vac/ 800 Vdc (UL)	35	210	2000	7	FWJ-35A
	40	300	2500	8	FWJ-40A
	50	470	3500	10	FWJ-50A
	60	670	5000	11	FWJ-60A
	70	1100	6900	12	FWJ-70A
	80	1550	9700	13	FWJ-80A
	90	1900	12,000	14	FWJ-90A
	100	2800	17,500	15	FWJ-100A
	125	4800	35,000	16	FWJ-125A
	150	6300	45,000	25	FWJ-150A
	175	7500	65,000	30	FWJ-175A
	200	11,700	80,000	32	FWJ-200A
	250	16,000	112,000	50	FWJ-250A
	300	23,500	164,000	56	FWJ-300A
	350	33,000	231,000	62	FWJ-350A
	400	47,000	330,000	67	FWJ-400A
	500	39,500	329,000	95	FWJ-500A
	600	61,000	520,000	105	FWJ-600A
	800	87,000	500,000	182	FWJ-800A
	1000	190,000	1,100,000	206	FWJ-1000A
	1200	370,000	2,100,000	240	FWJ-1200A
	1400	470,000	2,700,000	248	FWJ-1400A
	1600	700,000	4,000,000	267	FWJ-1600A
	1800	925,000	5,300,000	239	FWJ-1800A
	2000	1,330,000	7,600,000	244	FWJ-2000A

† Watts loss at rated current.

Dimensions — in

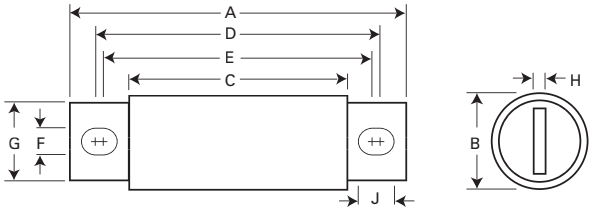

Amp range	A	B	C	D	E	F	G	H	J
35-60	5.00	0.94	3.11	4.24	4.18	0.35	0.75	0.13	0.38
70-100	4.93	1.13	3.09	4.27	4.16	0.35	1.00	0.19	0.41
125-200	5.69	1.53	3.26	4.80	4.06	0.45	1.00	0.25	0.82
250-400	5.77	2.00	3.50	4.81	4.15	0.43	1.50	0.25	0.76
500-600	7.20	2.50	3.47	5.98	4.71	0.56	2.00	0.38	1.20
800-2000	6.81	3.50	3.31	5.47	4.96	0.63	2.75	0.50	0.88

1″ = 25.4mm

For details on electrical characteristics, contact Application Engineering and ask for data sheets: 720027, 5785303 (35-600 A), 5785309 (800-2000 A),

North American Accessories

Modular fuse blocks

Bussmann series line of fuse blocks provides the user with design and manufacturing flexibility. Two identical half blocks make up a modular assembly that can be panel mounted any distance apart to accommodate any length fuse.

C5268 stud type

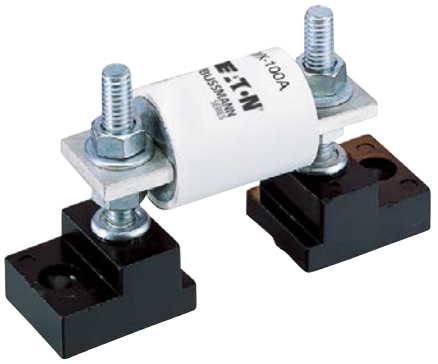

The simpler design is the C5268 modular fuse block. With this design, the fuse terminal and cable (with termination) are mounted on the same stud, minimizing installation labor. The stud type block is available in the configurations shown in the table below.

Catalog no.	Max fuse amp rating	Stud
C5268-1	200	5/16-18 x 1"
C5268-2	200	5/16-18 x 1-3/4"
C5268-3	200	5/16-18 x 3/4"
C5268-4	100	1/4-20 x 1"
C5268-5	100	1/4-20 x 1-3/4"

1BS10x connector type

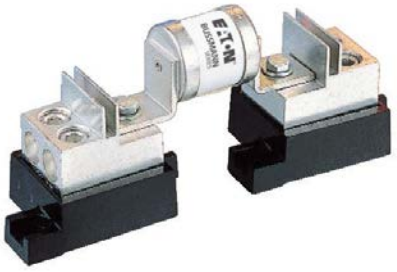

Bussmann series 1BS10 blocks utilize a tin-plated connector for wire termination and heat dissipation), and a plated-steel stud for fuse mounting. The connector type block is available in the configurations shown below. Consult your Bussmann series product representative for additional product details.

Catalog no.	Max rated voltage	Max fuse amp rating
1BS101	600	100
1BS102	600	400
1BS103	600	400
1BS104	600	600

BH modular type

BH modular blocks provide a wide range of mounting configurations for Bussmann series high speed semiconductors fuses. BH fuse blocks have a short-circuit current rating up to 200 kA RMS Sym.

Catalog no.	Max rated voltage	Max fuse amp rating
BH-0	700	100
BH-1	2500	400
BH-2	5000	600
BH-3	1250	700

Data sheets: 1200 (BH-0), 1201 (BH-1), 1202 (BH-2), 1203 (BH-3), 1206 (1BS101), 1207 (1BS102), 1208 (1BS103), 1209 (1BS104)

LCT, LET BS88

240 Vac/150 Vdc (IEC), 250-280 Vac/150 Vdc (UL), 6 to 180 A

BS88 style bolted tag high speed fuses for the protection of DC common bus, DC drives, power converters/rectifiers and reduced rated voltage starters. Low watts loss in a compact size.

Ratings

- Volts
  - LCT 240 Vac/150 Vdc (IEC), 250 Vac/150 Vdc (UL)
  - LET 280 Vac/150 Vdc (UL, 25-160 A), 250 Vac/150 Vdc (UL 180 A)
- Amps 6-180 A
- IR
  - 200 kA RMS Sym.
  - 50 kA DC at 125 Vdc
  - 100 kA at 80 Vdc (70-1000 A)

Operating class aR.

Agency information

- Designed and tested to BS88 Part 4 and IEC 60269 Part 4
- UL Recognized*
- CCC (LCT only)
- CE

* All fuses have been tested at 318 Vac. Consult Bussmann series product representative for UL Recognized status.

Dimensions — mm

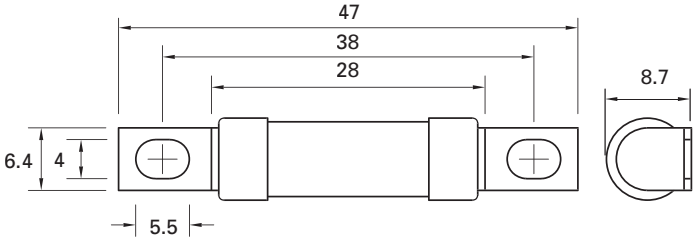

LCT

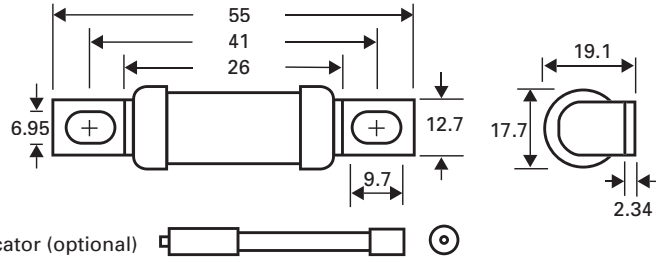

Indicator (optional)

LET — indicator optional

Fuse symbol	Rated voltage	Rated current(amps)	I²t (A²s) Pre-arcing	I²t (A²s) Clearing at 240 Vac	Watts loss (W)†	Catalog no.
LCT	240 Vac/150 Vdc (IEC) 250 Vac/150 Vdc (UL)	6	2.0	9	1.0	6LCT
		10	3.8	22	2.5	10LCT
		12	7.0	32	2.5	12LCT
		16	20.0	100	2.5	16LCT
		20	25.0	160	4.0	20LCT
LET	280 Vac/150 Vdc (UL)	25	18.0	250	4.0	25LET
		32	32.0	450	5.0	32LET
		35	50.0	600	5.0	35LET
		50	100.0	1400	7.0	50LET
		63	180.0	2200	9.0	63LET
		80	300.0	3800	10.0	80LET
		100	600.0	7500	10.0	100LET
		125	600.0	7500	16.0	125LET
		160	1100.0	16,000	20.0	160LET
	250 Vac/150 Vdc (UL)	180	1600.0	29,000	21.0	180LET

† Watts loss at rated current.
Note: 7LET, 10LET, 12LET and 16LET are available for replacement purposes on existing equipment.

For details on electrical characteristics, contact Application Engineering and ask for data sheets: 720004, 5785296 (LCT), 5785293 (LET)

LMT, LMMT BS88

240 Vac/150 Vdc (IEC), 250 Vac/150 Vdc (UL), 160 to 900 A

BS88 style bolted tags high speed fuses for the protection of DC common bus, DC drives, power converters/rectifiers and reduced rated voltage starters. Low watts loss in a compact size.

Ratings

- Volts
  - 240 Vac/150 Vdc (IEC)
  - 250 Vac/150 Vdc (UL)
- Amps 160-900 A
- IR
  - 200 kA RMS Sym., 40 kA at 150 Vdc (IEC)
  - 200 kA RMS Sym., 50 kA at 150 Vdc (UL)

Operating class aR

Agency information

- Designed and tested to BS88 Part 4 and IEC 60269 Part 4
- UL Recognized*
- CCC
- CE

* All fuses have been tested at 318 Vac. Consult Bussmann series product representative for UL Recognized status.

Fuse symbol	Rated voltage	Rated current (amps)	I²t (A²s) Pre-arcing	I²t (A²s) Clearing at 120 Vac	I²t (A²s) Clearing at 240 Vac	Watts loss (W)†	Catalog no.
LMT	240 Vac /150 Vdc (IEC) 250 Vac /150 Vdc (UL)	160	1100	7000	16,000	17	160LMT
		200	1500	10,000	20,000	28	200LMT
		250	3200	20,000	40,000	28	250LMT
		315	6000	35,000	75,000	35	315LMT
		355	8000	50,000	100,000	35	355LMT
		400	14,000	70,000	160,000	40	400LMT
		450	18,000	100,000	220,000	42	450LMT
LMMT	240 Vac /150 Vdc (IEC) 250 Vac /150 Vdc (UL)	400	6000	35,000	80,000	60	400LMMT
		500	14,000	80,000	170,000	64	500LMMT
		630	24,000	150,000	300,000	75	630LMMT
		710	32,000	200,000	460,000	77	710LMMT
		800	52,000	300,000	600,000	82	800LMMT
		900	75,000	400,000	800,000	97	900LMMT

† Watts loss at rated current.

Dimensions — mm

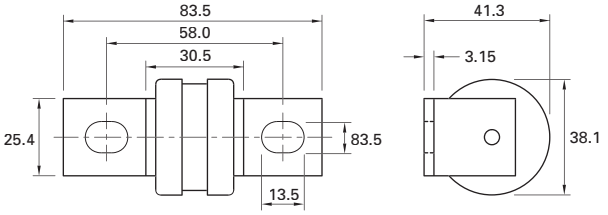

LMT — indicator optional

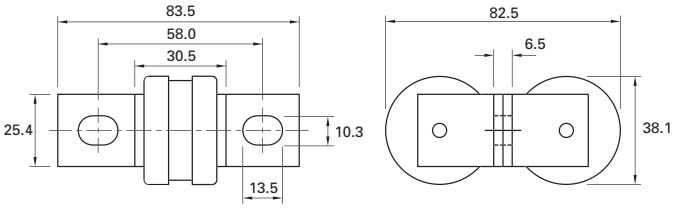

LMMT — indicator optional

For details on electrical characteristics, contact Application Engineering and ask for data sheets: 720004, 5785294 (LMT), 5785295 (LMMT)

CT, ET, FE, EET, FEE BS88

690 Vac/500 Vdc (IEC), 700 Vac/500 Vdc (UL), 6 to 200 A

BS88 style bolted tags high speed fuses for the protection of DC common bus, DC drives, power converters /rectifiers and reduced rated voltage starters.

Ratings

- Volts
  - 690 Vac/500 Vdc (IEC)
  - 700 Vac/500 Vdc (UL)
- Amps 6-200 A
- IR
  - CT: IEC — 90 kA RMS Sym., 40 kA at 500 Vdc, UL — 200 kA RMS Sym., 50 kA at 500 Vdc
  - ET, EET, FE and FEE: 200 kA RMS Sym.,50 kA at 500 Vdc

Operating class aR

Agency information

- Designed and tested to BS88 part 4 and IEC 60269 Part 4
- UL Recognized*
- CCC for ET, FE, EET, FEE
- CE

* Consult your Bussmann series product representative for UL Recognized status.

Dimensions — mm

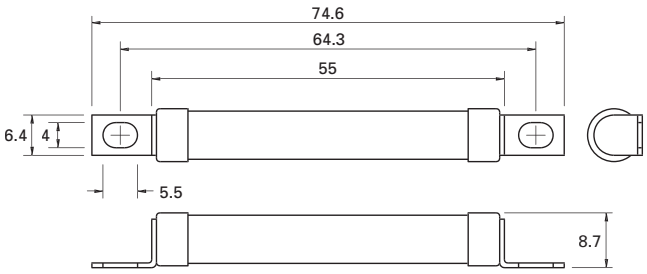

CT

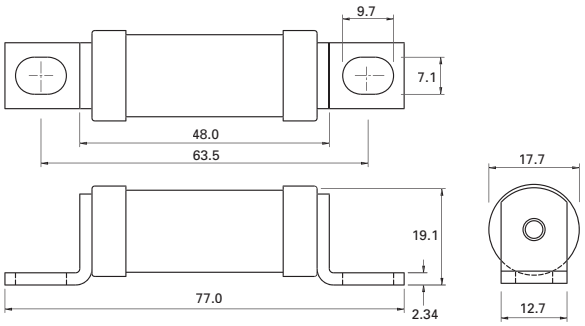

ET, FE — indicator optional

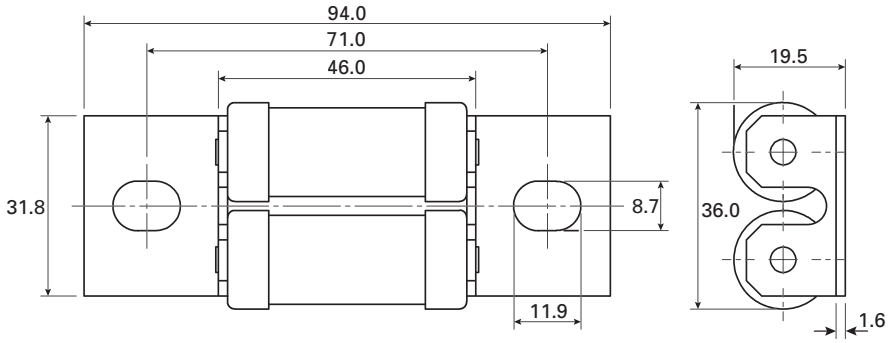

EET, FEE — indicator optional

For details on electrical characteristics, contact Application Engineering and ask for data sheets: 5785312 (CT, ET), 5785314 (FE), 5785313 (EET), 5785292 (FEE)

CT, ET, FE, EET, FEE BS88

690 Vac/500 Vdc (IEC), 700 Vac/500 Vdc (UL), 6 to 200 A

Fuse symbol	Rated voltage	Rated current (amps)	I²t (A²s) Pre-arcing	I²t (A²s) Clearing at 415 Vac	I²t (A²s) Clearing at 660 Vac	Watts loss (W)†	Catalog no.
CT	690 Vac/500 Vdc (IEC) 700 Vac/500 Vdc (UL)	6	1.8	8.5	12	2	6CT
		10	7.0	30.0	48	3	10CT
		12	10.0	40.0	65	3	12CT
		16	16.0	66.0	110	7	16CT
		20	32.0	150.0	220	7	20CT
ET	690 Vac/500 Vdc (IEC) 700 Vac/500 Vdc (UL)	25	25.0	150.0	250	7	25ET
		32	32.0	190.0	350	11	32ET
		35	52.0	310.0	500	11	35ET
		40	103.0	600.0	900	9	40ET
		45	103.0	680.0	1100	11	45ET
		56	135.0	950.0	1500	14	56ET
		63	171.0	1200.0	2000	16	63ET
		80	360.0	2500.0	4000	18	80ET
FE	690 Vac/500 Vdc (IEC) 700 Vac/500 Vdc (UL)	35	33.0	130.0	200	9	35FE
		40	52.0	180.0	300	9	40FE
		45	76.0	270.0	450	11	45FE
		50	103.0	380.0	600	11	50FE
		63	135.0	480.0	750	12	63FE
		71	210.0	600.0	950	17	71FE
		80	250.0	900.0	1500	20	80FE
		90	360.0	1300.0	2100	20	90FE
		100	470.0	1800.0	2800	23	100FE
EET	690 Vac/500 Vdc (IEC) 700 Vac/500 Vdc (UL)	90	490.0	300.0	4500	19	90EET
		110	600.0	4000.0	6500	27	110EET
		140	1050.0	7000.0	12,000	35	140EET
		160	1500.0	10,000.0	17,000	39	160EET
FEE	690 Vac/500 Vdc (IEC) 700 Vac/500 Vdc (UL)	100	400.0	1600.0	2400	24	100FEE
		120	540.0	1900.0	3100	32	120FEE
		140	850.0	2500.0	3800	36	140FEE
		160	1000.0	3700.0	5700	46	160FEE
		180	1400.0	5300.0	8400	46	180FEE
		200	1900.0	7100.0	11,400	52	200FEE

† Watts loss at rated current.

Note: FC, 8ET, 12ET, 15ET, 20ET, 65EET and 75EET are available for replacement purposes on existing equipment.

For details on electrical characteristics, contact Application Engineering and ask for data sheets: 5785312 (CT, ET), 5785314 (FE), 5785313 (EET), 5785292 (FEE)

FM, FMM, MT, MMT BS88

690 Vac/350-450 Vdc (IEC),700 Vac/500 Vdc (UL), 160 to 710 A

BS88 style bolted tags high speed fuses for the protection of DC common bus, DC drives, power converters /rectifiers and reduced rated voltage starters.

Ratings

- Volts
  - FM: 690 Vac/450 Vdc (IEC); 700 Vac/500 Vdc (UL)
  - FMM: 690 Vac/450 Vdc (IEC); 700 Vac (UL)
  - MT and MMT: 690 Vac/350 Vdc (IEC); 700 Vac (UL)
- Amps 160-710 A
- IR
  - FM: 200 kA RMS Sym. (IEC/UL), 40 kA at 450 Vdc (IEC), 50 kA at 500 Vdc (UL)
  - FMM: 200 kA RMS Sym. (IEC/UL), 40 kA at 450 Vdc (IEC).
  - MT and MMT: 200 kA RMS Sym. (IEC/UL), 40 kA at 350 Vdc (IEC).

Operating class aR

Agency information

- Designed and tested to BS88 Part 4 and IEC 60269 Part 4
- UL Recognized MT and MMT 350 Vdc (IEC) rating*
- CCC for FM and FMM
- CE

Consult your Bussmann series product representative for UL Recognized status.

Dimensions — mm

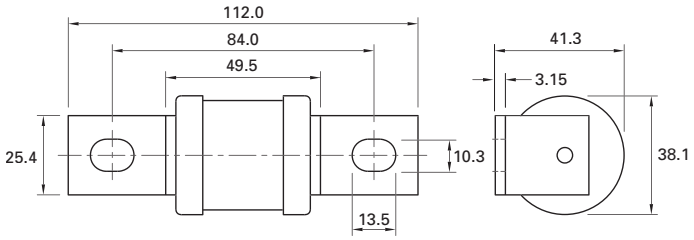

FM, MT — indicator optional

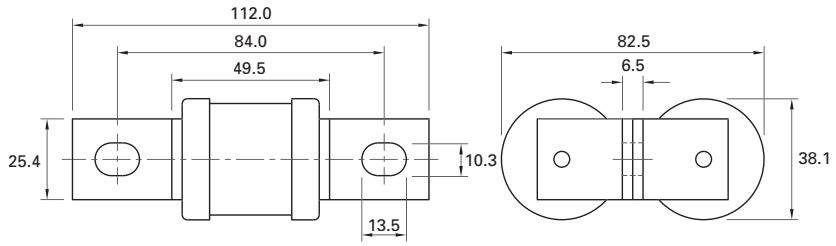

FMM, MMT — indicator optional

For details on electrical characteristics, contact Application Engineering and ask for data sheets: 5785314 (FM), 5785313 (MT), 5785292 (FMM), 5785311 (MMT)

FM, FMM, MT, MMT BS88

690 Vac/350-450 Vdc (IEC), 700 Vac/500 Vdc (UL), 160 to 710 A

Fuse symbol	Rated voltage	Rated current (amps)	I²t (A²s) Pre-arcing	I²t (A²s) Clearing at 415 Vac	I²t (A²s) Clearing at 660 Vac	Watts loss (W)†	Catalog no.
FM	690 Vac/450 Vdc (IEC) 700 Vac/500 Vdc (UL)	180	1400	7500	13,500	40	180FM
		200	2600	10,500	18,500	40	200FM
		225	3700	14,500	26,500	44	225FM
		250	5200	20,500	37,500	48	250FM
		280	7000	30,500	55,000	48	280FM
		315	10,000	40,000	77,000	55	315FM
		350	15,000	60,000	105,000	55	350FM
FMM	690 Vac/450 Vdc (IEC) 700 Vac (UL)	400	10,000	40,000	72,500	85	400FMM
		450	15,000	60,000	105,000	90	450FMM
		500	20,000	82,000	150,000	100	500FMM
		550	30,000	120,000	215,000	100	550FMM
		630	45,000	180,000	310,000	100	630FMM
		700	60,000	245,000	420,000	120	700FMM
MT	690 Vac/350 Vdc (IEC) 700 Vac (UL)	160	2400	15,000	25,000	26	160MT
		180	3800	25,000	38,000	26	180MT
		200	6000	40,000	58,000	27	200MT
		250	11,500	80,000	110,000	32	250MT
		280	16,500	100,000	150,000	35	280MT
		315	19,000	125,000	180,000	42	315MT
		355	22,000	160,000	200,000	51	355MT
MMT	690 Vac/350 Vdc (IEC) 700 Vac (UL)	180	1650	12,000	18,000	42	180MMT
		200	2200	16,000	23,000	42	200MMT
		225	3700	26,000	40,000	42	225MMT
		280	6600	47,000	70,000	47	280MMT
		315	8600	62,000	91,000	51	315MMT
		355	13,500	97,000	140,000	54	355MMT
		400	21,000	150,000	220,000	60	400MMT
		450	30,000	220,000	320,000	57	450MMT
		500	42,000	300,000	450,000	64	500MMT
		560	60,000	430,000	640,000	64	560MMT
		630	68,500	500,000	720,000	86	630MMT
		710	78,000	600,000	850,000	105	710MMT

† Watts loss at rated current.

For details on electrical characteristics, contact Application Engineering and ask for data sheets: 5785314 (FM), 5785313 (MT), 5785292 (FMM), 5785311 (MMT)

BS 88 Accessories

Trip indicator

Trip-indicator fuses are available for use in parallel with the main BS88-4 fuses. They can either be attached to the associated fuse or mounted separately in panel mounted fuse clips. Push-on adapters with microswitch (catalog numbers MAI and MBI) are available for use with the trip indicator to provide a means for remote indication.

Fuse ratings of 20 A and below cannot usually accommodate a trip fuse in parallel.

When a trip-indicator is to be attached to the main fuse, an accessory pack comprising a pair of mounting clips and an appropriate trip indicator is required. The clips are snapped onto the fuse and the indicator is pressed into clips as shown below.

Trip indicator kit catalog numbers (indicator + clips)

For fuse symbol	Catalog no.
ET	EC-600
EET	EC-600
FE	EC-600
FEE	EC-600
LET	EC-250
FM	MC-600
FMM	MC-600
LMT	MC-250
LMMT	MC-250

Indicator only

Catalog no.	Rated current	Dim. 'A' (mm)
TI250	250	37.6
TI500	500	47.5
TI600	600	55.7
TI700	700	61.8
TI1100	1100	98.4
TI1500	1500	120.8
TI2000	2000	147.5
TI2500	2500	198.3

Indicator dimensions — mm

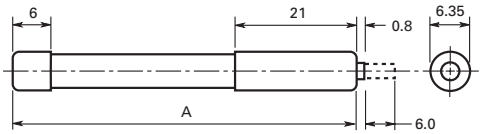

Indicator panel mount clips

CL1 panel mount fuse clips are available for mounting a trip-indicator directly to a PCB or insulated panel, or when mounting directly on the fuse is impractical. Order catalog number CL1.

CL1 dimensions — mm

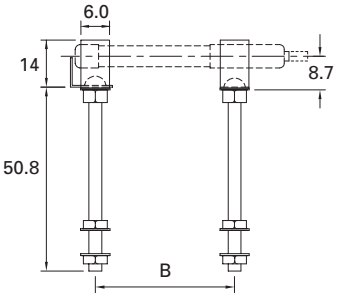

Microswitches

Microswitch/adapter: MAI and MBI

To provide a means of remote indication with the trip indicators, we offer two microswitch/adapters. The microswitches are provided with double pole, single throw contacts, having both a normally open (NO) and a normally closed (NC) position. A special material is used in the construction of the adapter to provide reliable operation in the temperatures ranges associated with standard operating conditions and during fuse operation.

Catalog no.	Description	Terminal orientation
MAI	Trip indicator adapter and microswitch	Back
MBI	Trip indicator adapter and microswitch	Side

Microswitch ratings (MAI and MBI)		
Terminals	**Quick connect**	
Current rating		
AC 50/60 Hz resistive load	4 A @ 250 V RMS	
	6 A @ 127 V RMS	
DC, resistive load	0.7 A @ 110 Vdc	
	2 A @ 30 Vdc	
Maximum working voltage		
Contact-to-contact (RMS)	1000 V	
	1500 V	
Maximum DC volts	110 Vdc	

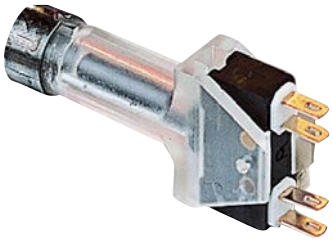

Microswitch/adapter dimensions — mm

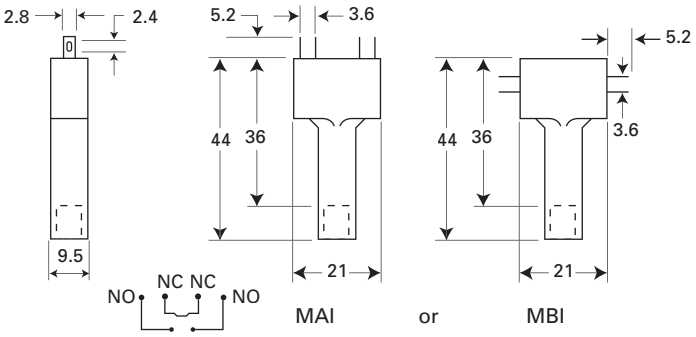

FWA Ferrule

150 Vac/dc (UL), 10x38mm and 21x51mm, 5 to 60 A

Ferrule style high speed fuses for the protection of DC common bus, DC drives, power converters /rectifiers and reduced rated voltage starters.

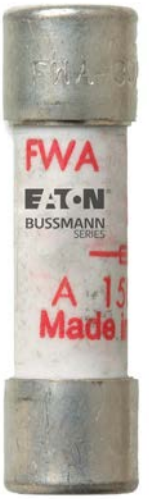

Ratings

- Volts 150 Vac/dc (UL)
- Amps 5-60 A
- IR
  - 200 kA RMS Sym.
  - 50 kA DC at 150 Vdc

Operating class aR

Agency information

- UL Recognized, JFHR2, E91958
- CE

Fuse size	Rated voltage	Rated current (amps)	I^2t (A^2s) Pre-arcing	I^2t (A^2s) Clearing at 150 Vac	Watts loss (W)†	Catalog no.
10x38mm (13/32"x1-1/2")	150 Vac/dc (UL)	5	1.6	8	2.0	FWA-5A10F
		10	3.6	16	2.7	FWA-10A10F
		15	14.0	50	3.3	FWA-15A10F
		20	33.0	130	3.8	FWA-20A10F
		25	58.0	220	4.9	FWA-25A10F
		30	100.0	400	4.9	FWA-30A10F
21x51mm (13/16"x2")		35	75.0	800	4.5	FWA-35A21F
		40	100.0	1000	5.1	FWA-40A21F
		45	130.0	1300	6.0	FWA-45A21F
		50	170.0	1600	7.3	FWA-50A21F
		60	250.0	2400	8.0	FWA-60A21F

† Watts loss at rated current.

Dimensions — in (mm)

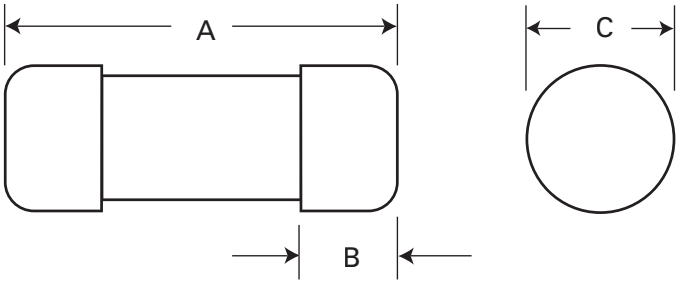

Amp range	A	B	C
5-30	1.5 (38.1)	0.38 (9.5)	0.41 (10.3)
35-60	2.0 (50.8)	0.63 (15.9)	0.81 (20.6)

For details on electrical characteristics, contact Application Engineering and ask for data sheets: 720003,5785317 (5-30 A), 5785305 (35-60 A)

FWX Ferrule

250 Vac/dc (UL), 14x51mm, 1 to 50 A

Ferrule style high speed fuses for the protection of DC common bus, DC drives, power converters/rectifiers rated voltage starters.

Ratings

- Volts
  - 250 Vac (UL, all ratings)
  - 250 Vdc (UL, 5-50 A only)
- Amps 1-50 A
- IR
  - 200 kA RMS Sym. (UL, all ratings)
  - 50 kA at 250 Vdc (UL, 5-50 A only)

Operating class aR

Agency information

- UL Recognized, JFHR2, E91958 1-50 A
- CSA Class 1422-30, 1422-90 (53787) 5-30 A
- CE

Fuse size	Rated voltage	Rated current(amps)	I²t (A²s) Pre-arcing	I²t (A²s) Clearing at 250 Vac	Watts loss (W)†	Catalog no.
14x51mm (9/16"x2")	250 Vac (UL)	1	0.03	0.40	5.7	FWX-1A14F
		2	0.08	0.10	8.6	FWX-2A14F
		3	0.11	0.26	2.8	FWX-3A14F
		4	0.1	0.23	3.0	FWX-4A14F
	250 Vac/dc (UL)	5	1.6	13.00	1.3	FWX-5A14F
		10	3.6	24.00	3.4	FWX-10A14F
		15	14.0	83.00	3.8	FWX-15A14F
		20	33.0	200.00	4.6	FWX-20A14F
		25	58.0	300.00	5.3	FWX-25A14F
		30	100.0	500.00	5.9	FWX-30A14F
		50	200.0	1800.00	5.7	FWX-50A14F

† Watts loss at rated current.

Dimensions — mm (in)

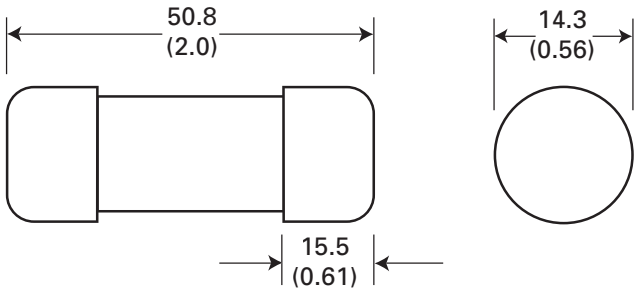

For details on electrical characteristics, contact Application Engineering and ask for data sheets: 720006, 5785302

FWH Ferrule

500 Vac (UL), 6x32mm, 0.25 to 30 A

Ferrule style high speed fuses for the protection of DC common bus, DC drives, power converters/rectifiers and reduced rated voltage starters.

Ratings

- Volts
  - 500 Vac (UL — 0.25-1 A and 3.15-30 A)
  - 1000 Vac (UL — 2 A)
  - 600 Vdc (UL — 1-5 A)
- Amps 0.25-30 A
- IR
  - 50 kA AC (0.25-1 A and 3.15-20 A)
  - 30 kA AC (2 A)
  - 20 kA AC (25-30 A)[1]
  - 50 kA DC (1-5 A))

[1] Tested at PF = 76%.

Operating class aR

Dimensions — mm (in)

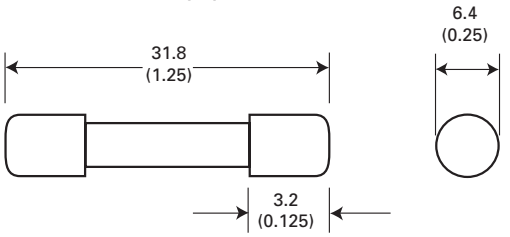

Agency information

- UL Recognized, JFHR2, E91958 (0.25-7 A) and JDYX2, E19180 (10-30 A)
- CSA Component Acceptance Class 1422-30, 1422-90 (53787) 0.25-7 A
- RoHS compliant
- CE

Opening times

Amp range	150%	200%	300%	Min IR
0.25-7	>30 min	>30 min	≤ 10 sec	300 %
10-30				200 %

	Rated voltage		I²t (A²s)			Catalog no.	
Amps	Vac	Vdc	Pre-arcing	Clearing @ 500Vac	Watts loss (W)†	Standard	RoHS compliant
0.25	500	—	0.01	0.05	2.7	—	FWH-.250A6F
0.5			0.05	0.25	1.2		FWH-.500A6F
1	1000	600	0.4	2	1.7		FWH-001A6F
2			1.3	3.5	3.2		FWH-002A6F
3.15	500		3.1	7.7	2.9		FWH-3.15A6F
4			—	—	—		FWH-004A6F
5			15	40	2.1		FWH-005A6F
6.3		—	36	90	2.3		FWH-6.30A6F
7			50	125	2.5		FWH-007A6F
10			9.9	139	2.86	FWH5-010A6F	FWH5-010A6FR
12.5			20	60	3.53	FWH5-12-5A6F	FWH5-12-5A6FR
15			44	146	3.08	FWH5-015A6F	FWH5-015A6FR
16			48	177	4.48	FWH5-016A6F	FWH5-016A6FR
20			75	259	4.26	FWH5-020A6F	FWH5-020A6FR
25			126	345	—	FWH-025A6F	FWH-025A6FR
30			145	430	—	FWH-030A6F	FWH-030A6FR

† Watts loss at rated current.

Data sheet no.720038

FWH Ferrule

500 Vac/ Vdc (UL), 14x51mm, 1 to 30 A

Ferrule style high speed fuses for the protection of DC common bus, DC drives, power converters/rectifiers and reduced rated voltage starters.

Ratings

- Volts
  - 500 Vac (UL, all ratings)
  - 500 Vdc (UL, 5-30 A only)
- Amps 1-30 A
- IR
  - 200 kA RMS Sym. all ratings
  - 50 kA at 500 Vdc 5-30 A only

Operating class aR

Agency information

- UL Recognized 1-30 A
- CSA Class 1422-30, (53787) 5-30 A
- CE

Fuse size	Rated voltage	Rated current (amps)	I²t (A²s) Pre-arcing	I²t (A²s) Clearing at 500 Vac	Watts loss (W)†	Catalog no.
14x51mm (9/16"x2")	500 Vac (UL)	1	0.04	0.2	5.7	FWH-1A14F
		2	0.08	0.1	8.7	FWH-2A14F
		3	0.11	0.2	2.8	FWH-3A14F
		4	0.10	0.2	3.0	FWH-4A14F
	500 Vac/dc (UL)	5	2.00	7.0	1.5	FWH-5A14F
		6	2.00	7.0	1.5	FWH-6A14F
		10	4.00	15.0	4.0	FWH-10A14F
		12	7.00	25.0	4.3	FWH-12A14F
		15	10.00	40.0	5.5	FWH-15A14F
		20	26.00	100.0	6.5	FWH-20A14F
		25	49.00	200.0	7.0	FWH-25A14F
		30	58.00	240.0	9.0	FWH-30A14F

† Watts loss at rated current.

Dimensions — mm (in)

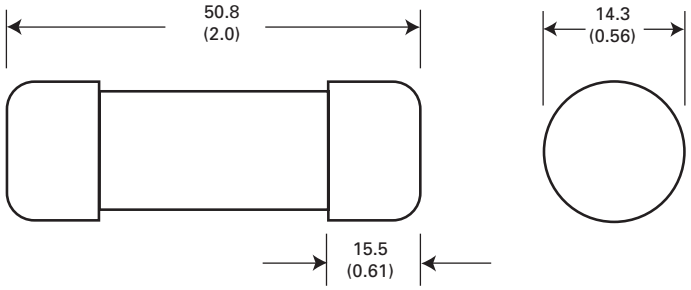

For details on electrical characteristics, contact Application Engineering and ask for data sheets:720008, 5785298

FWC Ferrule

600-700 Vac/700 Vdc (UL), 10x38mm, 1 to 32 A

Ferrule style high speed fuses for the protection of DC common bus, DC drives, power converters/rectifiers and reduced rated voltage starters.

Ratings

- Volts
  - 700 Vac/dc (UL, 1-4 A)
  - 600 Vac (UL, 6-32 A), 700 Vdc (UL, 6-25 A)
- Amps 1-32 A
- IR
  - 200 kA RMS Sym. at 600 Vac (6-32 A)
  - 200 kA RMS Sym. at 700 Vac (1-4 A)
  - 10 kA DC at 700 Vdc (1-25 A)

Operating class aR

Agency information

- UL Recognized, JFHR8, E91958 6-32 A
- CSA Class 1422-30, (53787) 6-32 A
- CE

Fuse size	Rated voltage	Rated current (amps)	I^2t (A^2s) Pre-arcing	I^2t (A^2s) Clearing at 600 Vac	Watts loss (W)†	Catalog no.
10x38mm (13/32"x1-1/2")	700 Vac/dc (UL)	1	0.2	1.2	0.5	FWC-1A10F
		2	0.5	3.0	1.2	FWC-2A10F
		3	1.6	11.0	1.5	FWC-3A10F
		4	5.2	32.0	1.5	FWC-4A10F
	600 Vac/700 Vdc (UL)	6	4.0	30.0	1.5	FWC-6A10F
		8	6.0	50.0	2.0	FWC-8A10F
		10	9.0	70.0	2.5	FWC-10A10F
		12	15.0	120.0	3.0	FWC-12A10F
		16	25.0	150.0	3.5	FWC-16A10F
		20	34.0	260.0	4.8	FWC-20A10F
		25	60.0	390.0	6.0	FWC-25A10F
	600 Vac (UL)	32	95.0	600.0	7.5	FWC-32A10F

† Watts loss at rated current.

Dimensions — mm

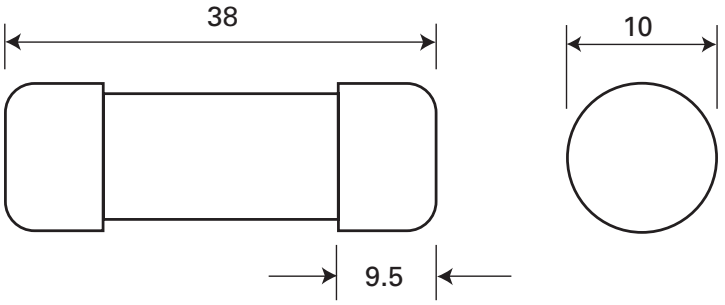

For details on electrical characteristics, contact Application Engineering and ask for data sheets:720011, 5785306

FWP Ferrule

690 Vac (IEC) 10x38mm, 4 to 32 A

Ferrule style Class gR high speed fuses for the protection of AC/DC drives and semiconductors.

Ratings

- Volts 690 Vac
- Amps 4-32 A
- IR
  - 200 kA RMS Sym.

Operating class gR

Agency information

- UL 248-13
- Designed and tested to IEC 60269, Part 4
- CE

Fuse type	Fuse size	Rated voltage	Rated current (amps)	I²t (A²s) Pre-arcing	I²t (A²s) Clearing at 690 Vac	Watts loss (W)† $0.8I_n$	Watts loss (W)† I_n	Catalog no.
Without striker	10x38 mm	690 Vac (IEC)	4	5.6	17	1.13	2.05	FWP-4G10F
			6	16.0	48	1.56	3.0	FWP-6G10F
			8	4.3	38	0.97	1.68	FWP-8G10F
			10	6.6	59	1.20	2.09	FWP-10G10F
			12	9.6	84	1.69	2.99	FWP-12G10F
			16	17.0	150	2.31	4.27	FWP-16G10F
			20	23.5	200	2.86	5.35	FWP-20G10F
			25	60.2	512	2.94	5.52	FWP-25G10F
			32**	94.0	800	3.82	7.43	FWP-32G10F

† Watts loss at rated current.
**32 A rated current with 25mm² conductors, derate to 27 A with 6mm² conductors.

Data sheet no. 10467

FWP Ferrule

690 Vac (IEC), 700 Vac (UL), 600 - 700 Vdc (UL), 14x51mm, 1 to 50 A

Ferrule style Class aR high speed fuses for the protection of DC common bus, DC drives, power converters/rectifiers and reduced rated voltage starters. Available with or without striker.

Ratings

- Volts 690 Vac (IEC), 700 Vac/600 Vdc (UL) with striker (see table for striker version)
- Amps 1-50 A
- IR
  - 200 kA RMS Sym.
  - 50 kA at 800 Vdc (5-50 A non striker version)
  - 600 Vdc for striker version

Operating class aR

Agency information

- UL Recognized, (without striker only) JFHR2, E91958
- CSA (without striker only) Class 1422-30, 1422-90 (53787)
- Designed and tested to IEC 60269, Part 4
- CE

Fuse type	Fuse size	Rated voltage	Rated current (amps)	I^2t (A^2s) Pre-arcing	I^2t (A^2s) Clearing at 700 Vac	Watts loss (W)†	Catalog no.
Without striker	14x51mm (9/16"x2")	700 Vac (UL)	1	0.04	0.41	5.7	FWP-1A14F
			2	0.08	0.11	8.7	FWP-2A14F
			3	0.11	0.26	2.8	FWP-3A14F
			4	0.10	0.23	3.0	FWP-4A14F
		690 Vac (IEC) 700 Vac/dc (UL)	5	2.00	11.00	1.5	FWP-5A14F
			10	4.00	22.00	4.0	FWP-10A14F
			15	10.00	70.00	5.5	FWP-15A14F
			20	26.00	180.00	6.5	FWP-20A14F
			25	49.00	320.00	7.0	FWP-25A14F
			30	58.00	400.00	9.0	FWP-30A14F
			32	68.00	600.00	8.0	FWP-32A14F
			40	84.00	750.00	8.0	FWP-40A14F
			50	200.00	1800.00	9.0	FWP-50A14F
With striker		700 Vac/600 Vdc (UL)	10	4.00	32.00	2.0	FWP-10A14FI
			15	7.00	63.00	4.0	FWP-15A14FI
			20	26.00	234.00	4.0	FWP-20A14FI
			25	42.00	378.00	4.0	FWP-25A14FI
			30	52.00	468.00	6.0	FWP-30A14FI
			32	68.00	600.00	8.0	FWP-32A14FI
			40	84.00	750.00	8.0	FWP-40A14FI
			50	200.00	1800.00	9.0	FWP-50A14FI

† Watts loss at rated current.

Dimensions — mm (in)

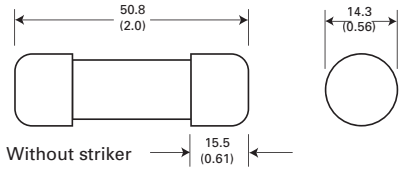

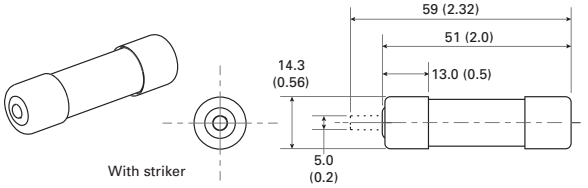

For details on electrical characteristics, contact Application Engineering and ask for data sheets: 720025, 5781724 fuses without striker; 5785566 fuses with striker

FWP Ferrule

690 Vac 14x51mm, 1 to 50 A

Ferrule style Class gR high speed fuses for the protection of AC/DC drives, semiconductors and high voltage auxiliary circuits in electric vehicles. Available with or without striker.

Ratings

- Volts 690 Vac
- Amps 4-50 A
- IR 200 kA RMS Sym.

Operating class gR

Agency information

- UL 248-13
- Designed and tested to IEC 60269, Part 4
- CE

Fuse type	Fuse size	Rated voltage	Rated current (amps)	I^2t (A^2s) Pre-arcing	I^2t (A^2s) Clearing at 690 Vac	Watts loss (W)† $0.8I_n$	Watts loss (W)† I_n	Catalog no.
Without striker	14x51mm (9/16"x2")	690 Vac (UL/IEC)	4	5.6	17	1.56	2.94	FWP-4G14F
			6	16	48	2.25	4.2	FWP-6G14F
			8	3.8	30	1.18	2.0	FWP-8G14F
			10	5.9	47	1.41	2.52	FWP-10G14F
			12	8.4	68	1.95	3.54	FWP-12G14F
			16	15	120	5.67	4.83	FWP-16G14F
			20	27	170	2.91	5.4	FWP-20G14F
			25	53	333	3.38	6.0	FWP-25G14F
			32	108	679	3.72	6.93	FWP-32G14F
			40	211	1331	4.13	7.52	FWP-40G14F
			50	350	2200	5.36	9.8	FWP-50G14F
With striker			8	3.8	30	1.18	2.0	FWP-8G14FI
			10	5.9	47	1.41	2.52	FWP-10G14FI
			12	8.4	68	1.95	3.54	FWP-12G14FI
			16	15	120	5.67	4.83	FWP-16G14FI
			20	27	170	2.91	5.4	FWP-20G14FI
			25	53	333	3.38	6.0	FWP-25G14FI
			32	108	679	3.72	6.93	FWP-32G14FI
			40	211	1331	4.13	7.52	FWP-40G14FI
			50	350	2200	5.36	9.8	FWP-50G14FI

† Watts loss at rated current.

Dimensions — mm (in)

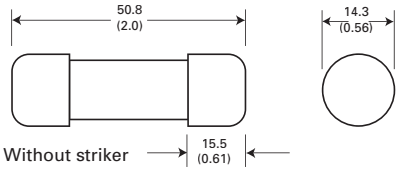

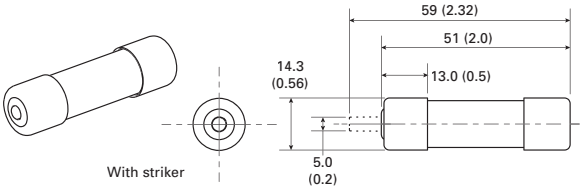

Data sheet no. 10468

FWP Ferrule

700 Vac/dc (UL), 22x58mm, 20 to 100 A

Ferrule style high speed fuses for the protection of DC common bus, DC drives, power converters/rectifiers and reduced rated voltage starters. Available with or without striker.

Ratings

- Volts 700 Vac/dc (UL)
- Amps 20-100 A
- IR
  - 200 kA RMS Sym.
  - 50 kA at 700 Vdc, L/R 5 ms

Operating class aR

Agency information

- UL Recognized, (without striker only) JFHR2, E91958
- CSA (without striker only) Class 1422-30, 1422-90 (53787)
- CE

Fuse type	Fuse size	Rated voltage	Rated current (amps)	I²t (A²s) Pre-arcing	I²t (A²s) Clearing at 700 Vac	Watts loss (W)†	Catalog no.
Without striker	22x58mm (7/8"x2-9/32")	700 Vac/dc (UL	20	23.0	330	5.0	FWP-20A22F
			25	37.0	530	6.0	FWP-25A22F
			32	55.0	780	8.0	FWP-32A22F
			40	68.0	960	12.0	FWP-40A22F
			50	155.0	2200	12.5	FWP-50A22F
			63	280.0	4000	15.0	FWP-63A22F
			80	550.0	7800	15.0	FWP-80A22F
			100	1100.0	15,600	16.5	FWP-100A22F
With striker			20	19.0	260	5.0	FWP-20A22FI
			25	34.0	410	6.0	FWP-25A22FI
			32	53.5	605	8.0	FWP-32A22FI
			40	68.0	750	9.0	FWP-40A22FI
			50	135.0	1600	9.5	FWP-50A22FI
			63	280.0	3080	11.0	FWP-63A22FI
			80	600.0	6600	13.5	FWP-80A22FI
			100	1100.0	12,500	16.0	FWP-100A22FI

† Watts loss at rated current.

Dimensions — mm (in)

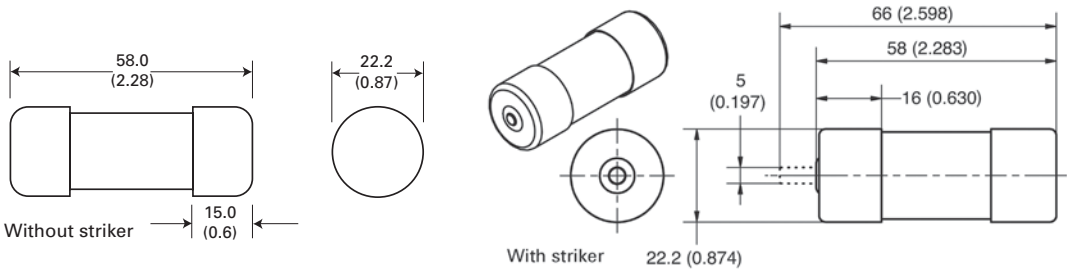

For details on electrical characteristics, contact Application Engineering and ask for data sheets:720026, 5781723

FWP Ferrule

690 Vac, 500 Vdc 22x58mm, 20 to 100 A

Ferrule style Class gR high speed fuses for the protection of AC/DC drives, semiconductors and high voltage auxiliary circuits in electric vehicles. Available with or without striker.

Ratings

- Volts
  - 690 Vac
  - 500 Vdc
- Amps 20-100 A
- IR
  - 200 kA RMS Sym.
  - 50 kA DC

Operating class gR

Agency information

- UL 248-13
- Designed and tested to IEC 60269, Part 4
- CE

Fuse type	Fuse size	Rated voltage	Rated current (amps)	I²t (A²s) Pre-arcing	I²t (A²s) Clearing at 690 Vac	Watts loss (W)† $0.8I_n$	Watts loss (W)† I_n	Catalog no.
Without striker	22x58 mm (7/8"x2-9/32")	690 Vac, 500Vdc	20	24	154	3.23	6.00	FWP-20G22F
			25	43	274	3.66	6.65	FWP-25G22F
			32	97	616	4.86	9.21	FWP-32G22F
			40	180	899	4.50	8.24	FWP-40G22F
			50	273	1362	6.26	11.85	FWP-50G22F
			63	516	2575	7.35	13.80	FWP-63G22F
			80	1092	5448	8.40	14.00	FWP-80G22F
			100	2065	10,300	9.40	17.70	FWP-100G22F
With striker			20	24	154	3.23	6.00	FWP-20G22FI
			25	43	274	3.66	6.65	FWP-25G22FI
			32	97	616	4.86	9.21	FWP-32G22FI
			40	180	899	4.50	8.24	FWP-40G22FI
			50	273	1362	6.26	11.85	FWP-50G22FI
			63	516	2575	7.35	13.80	FWP-63G22FI
			80	1092	5448	8.40	14.00	FWP-80G22FI
			100	2065	10,300	9.40	17.70	FWP-100G22FI

† Watts loss at rated current.

Dimensions — mm (in)

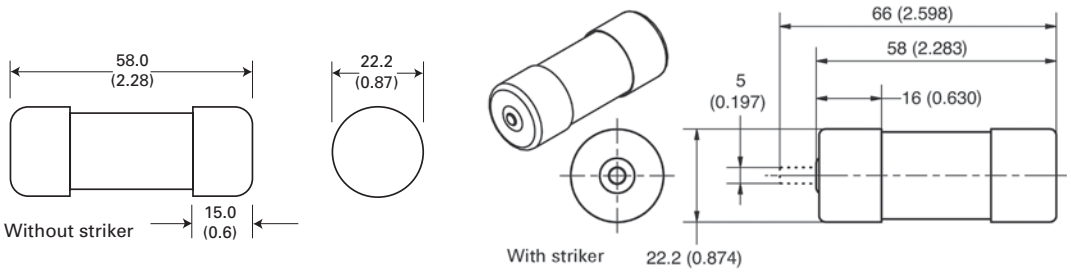

Data sheet no. 10469

FWK Ferrule

750 Vdc (IEC), 20x127mm and 25x146mm, 5 to 60 A

Ferrule style high speed fuses for the protection of DC common bus, DC drives, power converters/rectifiers and reduced rated voltage starters.

Ratings

- Volts 750 Vdc (IEC)
- Amps
  - 5-30 A (20x127mm)
  - 35-60 A (25x146mm)
- IR 50 kA at 750 Vdc, L/R 10-15 ms

Operating class gG

Agency information

- CE

Fuse size	Rated voltage	Rated current (amps)	I²t (A²s) Pre-arcing	I²t (A²s) Clearing at 750 Vac	Watts loss (W)†	Catalog no.
20x127mm (13/32"x5")	750 Vdc (IEC)	5	8.5	16	6.7	FWK-5A20F
		8	50	100	8.8	FWK-8A20F
		10	95	200	8.5	FWK-10A20F
		15	100	240	5.0	FWK-15A20F
		20	125	315	7.8	FWK-20A20F
		25	400	1100	6.5	FWK-25A20F
		30	800	2600	6.5	FWK-30A20F
25x146mm (1"x5-3/4")		35	1300	4600	6.0	FWK-35A25F
		40	1600	5300	6.8	FWK-40A25F
		50	3100	12,000	7.3	FWK-50A25F
		60	5900	24,000	7.7	FWK-60A25F

† Watts loss at rated current.

Dimensions — mm (in)

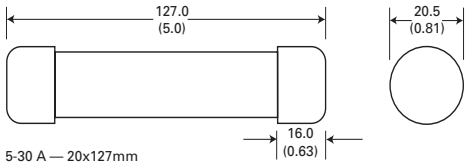

5-30 A — 20x127mm

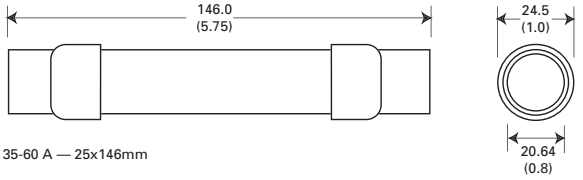

35-60 A — 25x146mm

For details on electrical characteristics, contact Application Engineering and ask for data sheets:720039, 5785031

FWJ Ferrule

1000 Vac/800 Vdc (UL), 14x67mm, 20 to 30 A

Ferrule style high speed fuses for the protection of DC common bus, DC drives, power converters/rectifiers, reduced rated voltage starters and high voltage auxiliary circuits in electric vehicles.. Available with or without striker for remote indication.

Ratings

- Volts 1000 Vac/800 Vdc
- Amps 20-30 A
- IR
  - 25 kA RMS Sym.
  - 50 kA at 800 Vdc

Operating class aR

Agency information

- UL Recognized, JFHR2, E91958
- CE

Fuse size	Rated voltage	Rated current (amps)	I²t (A²s) Pre-arcing	I²t (A²s) Clearing at 1000 Vac	Watts loss (W)†	Catalog no.
14x67mm (9/16"x2-5/8")	1000 Vac/ 800 Vdc (UL)	20	25	220	9	FWJ-20A14F
		25	33	350	11	FWJ-25A14F
		30	52	450	14	FWJ-30A14F

† Watts loss at rated current.

Dimensions — mm

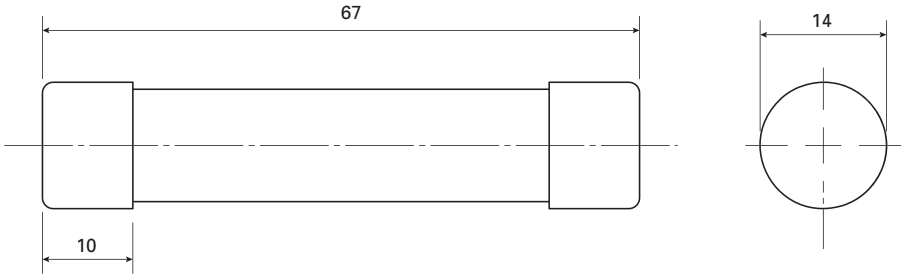

For details on electrical characteristics, contact Application Engineering and ask for data sheets:720028, 5785315

FWL Ferrule

1200 Vac/1000 Vdc (IEC), 20x127mm, 20 to 30 A

Ferrule style high speed fuses for the protection of DC common bus, DC drives, power converters/rectifiers and reduced rated voltage starters. Available with indicator.

Ratings

- Volts
  - 1200 Vac (IEC)
  - 1000 Vdc (IEC)
- Amps 20-30 A
- IR
  - 50 kA RMS Sym.
  - 50 kA at 1000 Vdc

Operating class gR

Agency information

- IEC 60077
- CE

Fuse type	Fuse size	Rated voltage	Rated current (amps)	I²t (A²s) Pre-arcing	I²t (A²s) Clearing at 1000 Vac	Watts loss (W)†	Catalog no.
Without indicator	20x127mm (13/16"x5")	1200 Vac/1000 Vdc (IEC)	20	675	1550	5.9	FWL-20A20F
			25	1200	2760	6.5	FWL-25A20F
			30	1850	4300	7.5	FWL-30A20F
With indicator			20	675	1550	5.9	FWL-20A20FI
			25	1200	2760	6.5	FWL-25A20FI
			30	1850	4300	7.5	FWL-30A20FI

† Watts loss at rated current.

Dimensions — mm

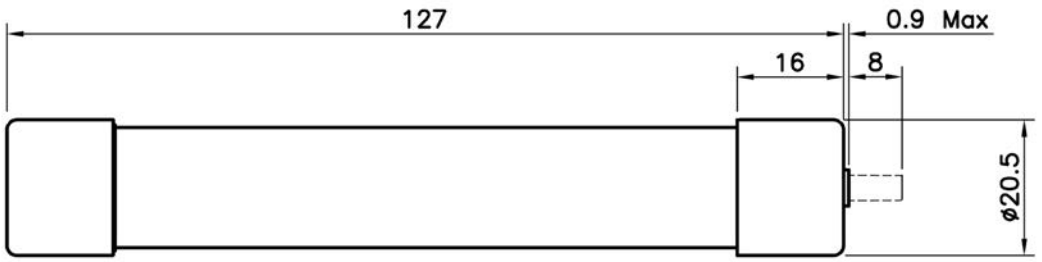

For details on electrical characteristics, contact Application Engineering and ask for data sheets:720040, 5785455

FWS Ferrule

1400 - 2000 Vac/1000 Vdc (IEC), 20x127mm, 2 to 15 A

Ferrule style high speed fuses for the protection of DC common bus, DC drives, power converters/rectifiers and reduced rated voltage starters. Available with indicator.

Ratings

- Volts
  - 2000 Vac/1000 Vdc (IEC, 2-8 A)
  - 1400 Vac/1000 Vdc (IEC, 10-15 A)
- Amps 2-15 A
- IR
  - 50 kA RMS Sym.
  - 50 kA at 1000 Vdc (2-10 A only)

Operating class gG

Agency information

- IEC 60077
- CE

Fuse type	Fuse size	Rated voltage	Rated current (amps)	I²t (A²s) Pre-arcing	I²t (A²s) Clearing at 1000 Vac	Watts loss (W)†	Catalog no.
Without indicator	20x127mm (13/16"x5")	2000 Vac/1000 Vdc (IEC)	2	0.8	2.4	4.4	FWS-2A20F
			6	27.0	81.0	6.7	FWS-6A20F
			8	64.0	192.0	7.6	FWS-8A20F
		1400 Vac/1000 Vdc (IEC)	10	118.0	277.0	3.0	FWS-10A20F
			12	170.0	380.0	3.4	FWS-12A20F
			15	209.0	500.0	5.0	FWS-15A20F
With indicator		2000 Vac/1000 Vdc (IEC)	2	0.8	2.4	4.4	FWS-2A20FI
			6	27.0	81.0	6.7	FWS-6A20FI
			8	64.0	192.0	7.6	FWS-8A20FI
		1400 Vac/1000 Vdc (IEC)	10	118.0	277.0	3.0	FWS-10A20FI
			12	170.0	380.0	3.4	FWS-12A20FI
			15	209.0	500.0	5.0	FWS-15A20FI

† Watts loss at rated current.

Dimensions — mm

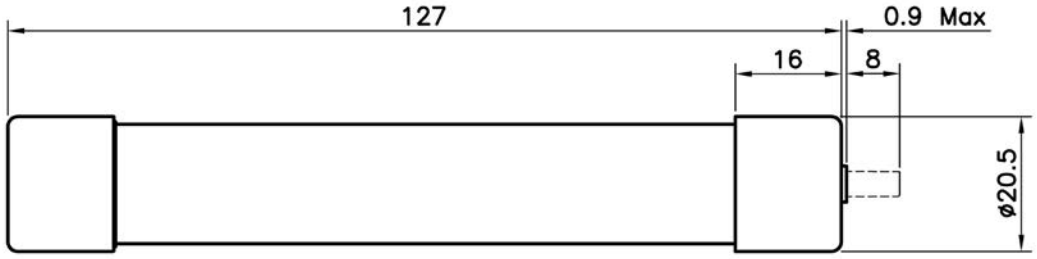

For details on electrical characteristics, contact Application Engineering and ask for data sheets:720040, 5785109

Ferrule fuse accessories

JM70100 DIN-Rail/panel mount block for 22x58mm fuses

Modular, open-style fuse blocks for 22x58mm cylindrical fuses feature versatile 35mm DIN-Rail or screw-to-panel mounting. Available optional IP20 finger-safe covers with lockout/tagout capability come in indicating and non-indicating versions. For use with FWP fuses.

Ratings

- Volts 700 Vac
- Amps 100 A
- Withstand rating 200 kA

Agency information

- UL Recognized, Guide IZTL2, File 14853

Catalog no.	Poles	Terminal type	Optional IP20 cover catalog no.* Indicating**	Non-indicating
JM70100-1CR	1	Box lug	CVRI-J-60060	CVR-J-60060
JM70100-2CR	2			
JM70100-3CR	3			

* Order separately, one cover per pole.
** Indication requires 90 V minimum and energized, closed circuit.

Data sheet no. 10496

CHM modular DIN-Rail mount holders for 10x38mm fuses

Bussmann series compact IP20 finger-safe modular DIN-Rail mount fuse holders for 10x38mm cylindrical fuses.

Catalog no. With indicator	Catalog no. Without indicator	Rated voltage and current	Agency information	Number of poles	Terminal rating	Rated withstand capacity	Compatible Bussmann series fuses
CHM1DIU	CHM1DU	IEC 690 Vac/32 A UL 600 Vac/30 A	IEC 60269-2 UR; CSA; CCC	1	IEC: 1 to 25mm² 70°C PVC/copper cable, solid, stranded, fine stranded, fork lug, comb busbar; single and dual	IEC 120 kA RMS Sym. UL 200 kA RMS Sym. CCC 100 kA RMS Sym.	FWA, FWC.
CHM2DIU	CHM2DU			2			
CHM3DIU	CHM3DU			3			
CHM4DIU	CHM4DU			4			
CHM1DNIU	CHM1DNU		IEC 60269-2	1-pole + 1 neutral			
CHM3DNIU	CHM3DNU			3-pole + 1 neutral			
—	CHM1DNXU	IEC 690 Vac/32 A	IEC 60269-2	1 neutral		N/A	N/A

Data sheet no. 10430

Ferrule fuse accessories

CH14 and CH22 modular DIN-Rail holders

Bussmann series compact DIN-Rail mount fuse holders for 14x51mm and 22x58mm cylindrical fuses. Available in different versions with neutral and microswitch.

Mounting

- 35mm DIN-Rail
- Panel mount (2xM4 screws)

CH14

CH22

Catalog no.							
Without indicator	With indicator	Description	Rated voltage and current	Agency markings	Terminal rating	Rated withstand capacity	Compatible Bussmann series fuses
14x51mm							
CH141DNXU	—	Neutral only	690 Vac/50 A 750 Vdc/50 A	IEC 60269-1 IEC 60269-2	Size: 2.5-50mm² Torque: 3 N•m max	120 kA AC	FWX-A14F[1,] FWH-A14F[1,] FWP-A14F[1, 2]
CH141DU	CH141DIU	1 pole					
CH142DU	CH142DIU	2 pole					
CH143DU	CH143DIU	3 pole					
CH144DU	CH144DIU	4 pole					
CH141DNU	CH141DNIU	1 pole + neutral					
CH143DNU	CH143DNIU	3 pole + neutral					
CH141DMSU-F	—	1 pole with microswitch					
CH143DMSU-F	—	3 pole with microswitch					
CH143DNMSU-F	—	3 pole +neutral with microswitch					
22x58mm							
CH221DNXU	—	Neutral holder	690 Vac/125 A 1000 Vdc/125 A	IEC 60269-1 IEC 60269-2	Size: 4 - 50 mm² Torque: 4 N•m max	120 kA AC 50 kA DC	FWP ferrule[1, 2]
CH221DU	CH221DIU	1 pole fuse holder					
CH222DU	CH222DIU	2 pole fuse holder					
CH223DU	CH223DIU	3 pole fuse holder					
CH224DU	CH224DIU	4 pole fuse holder					
CH221DNU	CH221DNIU	1 pole + neutral					
CH223DNU	CH223DNIU	3 pole + neutral					
—	CH221DMSU-F	1 pole with microswitch					
—	CH223DMSU-F	3 pole with microswitch					
—	CH223DNMSU-F	3 pole with microswitch + neutral					

[1] Maximum allowed continuous current applies. Please refer to data sheet for details.
[2] Please consult our application engineers if you wish to use a FWP fuse with a striker option.

CH14 and CH22 accessories

Catalog no.	Description	For holder
AL-D	Multi-pole ganging clips, one kit will gang up to 4-poles together	CH14 and CH22
CH14-P	Multi-pole handle pins, one kit will gang up to 12 handles together	CH14 and CH22
CH14-L	Lockout padlock support, it will accept up to 5mm diameter padlock shank	CH14
CH22-L	Lockout padlock support, it will accept up to 5mm diameter padlock shank	CH22
CH14-IP20	IP20 protection accessory, provides IP20 protection to terminals with 10mm² or less cable	CH14
CH22-IP20		CH22
CH14-MS1	1-pole microswitch for blown fuse monitoring	CH14
CH22-MS1		CH22
CH14-MS3	3-pole microswitch for blown fuse monitoring	CH14
CH22-MS3		CH22

Data sheet no. 10080 (CH14), 10115 (CH22)

170M — Square Body size 000 and 00, DIN 43653

690 Vac (IEC), 700 Vac/dc (UL), 10 to 400 A

Square body DIN 43653 bolted tags high speed fuses, for the protection of DC common bus, DC drives, power converters/ rectifiers and reduced rated voltage starters. Available with and without visual indicator, and Type T indicator for a microswitch.

Ratings

- Volts
  - 690 Vac (IEC, size 000 and 00)
  - 700 Vac (UL, size 000; size 00 100-400 A only)
  - 700 Vdc (UL, size 000)
- Amps 10-400 A
- IR
  - 200 kA RMS Sym.
  - 50 kA at 700 Vdc (size 000 only)

Operating class

- gR - size 000 (10-63 A), size 00 (25-80 A)
- aR - size 000 (>63 A), size 00 (>80 A)

Agency Information

- Designed and tested to IEC 60269 Part 4
- UL Recognized, JFHR2, E125085
- CSA Class 53787, File 1422-30 on size 000
- CCC
- CE

Dimensions — mm

The dotted line represents the Type T indicator fuse.

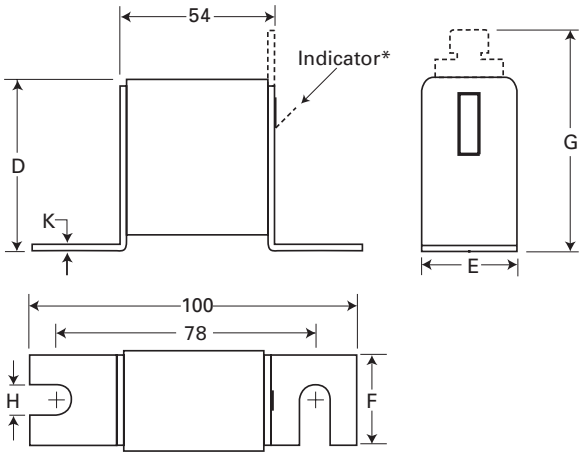

Type -U/80, -/80, -TN/80

Size	D	E	F	G	H	K
000	40	21	20	51	8	2
00	51	30	28	67	10	2

* Indicatior for size 00 fuses is a red pin.

For details on electrical characteristics, contact Application Engineering and ask for data sheets:170K6310 (Size 000), 170K6312 (Size 00)

170M — Square Body size 000 and 00, DIN 43653

690 Vac (IEC), 700 Vac/dc (UL), 10 to 400 A

Fuse size	Rated voltage	Rated current (amps)	I²t (A²s) Pre-Arcing	I²t (A²s) Clearing at 660 Vac	Watts loss (W)†	Catalog no. -U/80 without indicator	Catalog no. -/80 with indicator	Catalog no. -TN/80 Type T indicator for microswitch
000	690 Vac (IEC) 700 Vac/dc (UL)	10	3.8	25.5	3.0	170M1308	170M1358	170M1408
		16	7.2	48.0	5.5	170M1309	170M1359	170M1409
		20	11.5	78.0	7.0	170M1310	170M1360	170M1410
		25	19.0	130.0	9.0	170M1311	170M1361	170M1411
		32	40.0	270.0	10.0	170M1312	170M1362	170M1412
		40	69.0	460.0	12.0	170M1313	170M1363	170M1413
		50	115.0	770.0	15.0	170M1314	170M1364	170M1414
		63	215.0	1450.0	16.0	170M1315	170M1365	170M1415
		80	380.0	2550.0	19.0	170M1316	170M1366	170M1416
		100	695.0	4650.0	24.0	170M1317	170M1367	170M1417
		125	1250.0	8500.0	28.0	170M1318	170M1368	170M1418
		160	2350.0	16,000.0	32.0	170M1319	170M1369	170M1419
		200	4200.0	28,000.0	37.0	170M1320	170M1370	170M1420
		250	7750.0	51,500.0	42.0	170M1321	170M1371	170M1421
		315	12,000.0	80,500.0	53.0	170M1322	170M1372	170M1422
00	690 Vac (IEC)	25	19.0	130.0	6.0	—	170M2608	170M2658
		32	28.5	195.0	7.0		170M2609	170M2659
		40	50.0	360.0	9.0		170M2610	170M2660
		50	95.0	640.0	10.0		170M2611	170M2661
		63	170.0	1200.0	12.0		170M2612	170M2662
		80	310.0	2100.0	15.0		170M2613	170M2663
00	690 Vac (IEC) 700 Vac (UL)	100	620.0	4150.0	20.0		170M2614	170M2664
		125	1000.0	6950.0	25.0		170M2615	170M2665
		160	1900.0	13,000.0	30.0		170M2616	170M2666
		200	3400.0	23,000.0	35.0		170M2617	170M2667
		250	6250.0	42,000.0	45.0		170M2618	170M2668
		315	10,000.0	68,500.0	55.0		170M2619	170M2669
		350	13,500.0	91,500.0	60.0		170M2620	170M2670
		400	18,000.0	125,000.0	70.0		170M2621	170M2671

† Watts loss at rated current.

For details on electrical characteristics, contact Application Engineering and ask for data sheets:170K6310 (Size 000), 170K6312 (Size 00)

170M — Square Body size 1* to 3, DIN 43653

690 Vac (IEC), 700 Vac (UL), 40 to 2000 A

Square body DIN 43653 bolted tags high speed fuses, for the protection of DC common bus, DC drives, power converters/ rectifiers and reduced rated voltage starters. Available with visual indicator, and Type K and T indicator for a microswitch.

Ratings

- Volts
  - 690 Vac (IEC)/700 Vac (UL)
  - 750 Vdc (UL, see catalog number table for specific fuses)
- Amps 40-2000 A
- IR 200 kA RMS Sym.

Operating class aR

Agency information

- Designed and tested to IEC 60269 Part 4
- UL Recognized, JFHR2*, E125085
- CSA Class 53787, File 1422-30*
- CCC except where noted
- CE

* Consult your Bussmann series product representative for status.

Dimensions — mm

1mm = 0.0394"

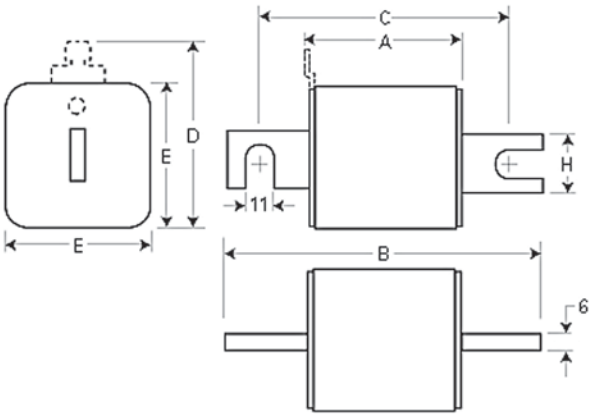

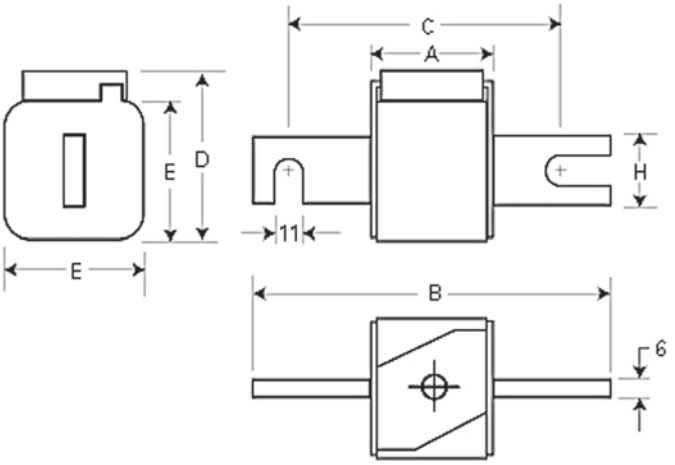

Type -/80, -TN/80, -/110, -TN/110

Size	A	B	B[1]	C	C[1]	D[2]	E	H
1*	50	104	134	78	108	58	45	22
1	50	108	138	78	108	66	53	25
2	50	108	138	78	108	75	61	25
3	51	109	139	78	108	90	76	30

1 Valid for fuse Types -/110 and -TN/110.
2 Valid for fuse Types -TN/80 and -TN/110.

Type -KN/80, -KN/110

Size	A	B	B[3]	C	C[3]	D	E	H
1*	50	104	134	78	108	59	45	22
1	50	108	138	78	108	69	53	25
2	50	108	138	78	108	77	61	25
3	51	109	139	78	108	92	76	30

3 Valid for fuse Type -KN/110.

For details on electrical characteristics, contact Application Engineering and ask for data sheets:170K6314 (Size 1*), 170K6316 (Size 1), 170K6318 (Size 2), 170K6320 (Size 3)

170M — Square Body size 1* to 3, DIN 43653

690 Vac (IEC), 700 Vac (UL), 40 to 2000 A

Fuse size	Rated voltage	Rated current (amps)	I²t (A²s) Pre-arcing	I²t (A²s) Clearing at 660 Vac	Watts loss (W)†	Catalog no. -/80 with indicator	Catalog no. -TN/80 Type T indicator for micro	Catalog no. -KN/80 Type K indicator for micro	Catalog no. -/110 with indicator	Catalog no. -TN/110 Type T indicator for micro	Catalog no. -KN/110 Type K indicator for micro
1*	690 Vac (IEC) 700 Vac (UL)	40	40	270	9	170M3008	170M3058	170M3108	170M3158	170M3208	170M3258
		50	77	515	11	170M3009	170M3059	170M3109	170M3159	170M3209	170M3259
		63	115	770	14	170M3010	170M3060	170M3110	170M3160	170M3210	170M3260
		80	185	1250	18	170M3011	170M3061	170M3111	170M3161	170M3211	170M3261
		100	360	2450	21	170M3012	170M3062	170M3112	170M3162	170M3212	170M3262
		125	550	3700	26	170M3013	170M3063	170M3113	170M3163	170M3213	170M3263
		160	1100	7500	30	170M3014	170M3064	170M3114	170M3164	170M3214	170M3264
		200	2200	15,000	35	170M3015	170M3065	170M3115	170M3165	170M3215	170M3265
		250	4200	28,500	40	170M3016	170M3066	170M3116	170M3166	170M3216	170M3266
		315	7000	46,500	50	170M3017	170M3067	170M3117	170M3167	170M3217	170M3267
		350	10,000	68,500	55	170M3018	170M3068	170M3118	170M3168	170M3218	170M3268
		400	15,000	105,000	60	170M3019	170M3069	170M3119	170M3169	170M3219	170M3269
		450	21,000	140,000	65	170M3020	170M3070	170M3120	170M3170	170M3220	170M3270
		500	27,000	180,000	70	170M3021	170M3071	170M3121	170M3171	170M3221	170M3271
		550	34,000	230,000	75	170M3022	170M3072	170M3122	170M3172	170M3222	170M3272
		630	48,500	325,000	80	170M3023	170M3073	170M3123	170M3173	170M3223	170M3273
1	690 Vac (IEC) 700 Vac (UL)	200	1650	11,500	45	170M4008	170M4058	170M4108	170M4158	170M4208	170M4258
		250	3100	21,000	55	170M4009	170M4059	170M4109	170M4159	170M4209	170M4259
		315	6200	42,000	58	170M4010	170M4060	170M4110	170M4160	170M4210	170M4260
		350	8500	59,000	60	170M4011	170M4061	170M4111	170M4161	170M4211	170M4261
		400	13,500	91,500	65	170M4012	170M4062	170M4112	170M4162	170M4212	170M4262
		450	17,000	120,000	70	170M4013	170M4063	170M4113	170M4163	170M4213	170M4263
		500	25,000	170,000	72	170M4014	170M4064	170M4114	170M4164	170M4214	170M4264
		550	34,000	230,000	75	170M4015	170M4065	170M4115	170M4165	170M4215	170M4265
		630	52,000	350,000	80	170M4016	170M4066	170M4116	170M4166	170M4216	170M4266
		700	69,500	465,000	85	170M4017	170M4067	170M4117	170M4167	170M4217	170M4267
		800	105,000	725,000	95	170M4018	170M4068	170M4118	170M4168	170M4218	170M4268
		900[2]	155,000	850,000[2]	100	170M4019[1]	170M4069[1]	170M4119[1]	170M4169[1]	170M4219[1]	170M4269[1]
2	690 Vac (IEC) 700 Vac (UL)	400	11,000	74,000	65	170M5008	170M5058	170M5108	170M5158	170M5208	170M5258
		450	15,500	105,000	70	170M5009	170M5059	170M5109	170M5159	170M5209	170M5259
		500	21,500	145,000	75	170M5010	170M5060	170M5110	170M5160	170M5210	170M5260
		550	28,000	190,000	80	170M5011	170M5061	170M5111	170M5161	170M5211	170M5261
		630	41,000	275,000	90	170M5012	170M5062	170M5112	170M5162	170M5212	170M5262
		700	60,500	405,000	95	170M5013	170M5063	170M5113	170M5163	170M5213	170M5263
		800	86,000	575,000	105	170M5014	170M5064	170M5114	170M5164	170M5214	170M5264
		900	125,000	840,000	110	170M5015	170M5065	170M5115	170M5165	170M5215	170M5265
		1000	180,000	1,250,000	115	170M5016	170M5066	170M5116	170M5166	170M5216	170M5266
		1100[3]	245,000	1,600,000	120	170M5017	170M5067	170M5117	170M5167	170M5217	170M5267
		1250[3]	365,000	2,400,000	130	170M5018	170M5068	170M5118	170M5168	170M5218	170M5268
3	690 Vac (IEC) 700 Vac (UL)	500	14,000	95,000	95	170M6008	170M6058	170M6108	170M6158	170M6208	170M6258
		550	19,500	135,000	100	170M6009	170M6059	170M6109	170M6159	170M6209	170M6259
		630	31,000	210,000	105	170M6010	170M6060	170M6110	170M6160	170M6210	170M6260
		700	44,500	300,000	110	170M6011	170M6061	170M6111	170M6161	170M6211	170M6261
		800	69,500	465,000	115	170M6012	170M6062	170M6112	170M6162	170M6212	170M6262
		900	100,000	670,000	120	170M6013	170M6063	170M6113	170M6163	170M6213	170M6263
		1000	140,000	945,000	125	170M6014	170M6064	170M6114	170M6164	170M6214	170M6264
		1100	190,000	1,300,000	130	170M6015	170M6065	170M6115	170M6165	170M6215	170M6265
		1250	290,000	1,950,000	140	170M6016	170M6066	170M6116	170M6166	170M6216	170M6266
		1400	370,000	2,450,000	155	170M6017	170M6067	170M6117	170M6167	170M6217	170M6267
		1500	460,000	3,100,000	160	170M6018	170M6068	170M6118	170M6168	170M6218	170M6268
		1600	580,000	3,900,000	160	170M6019	170M6069	170M6119	170M6169	170M6219	170M6269
		1800[4]	880,000	5,250,000[4]	165	170M6020††	170M6070††	170M6120	170M6170††	170M6220††	170M6270
		2000[5]	1,150,000	6,350,000[5]	175	170M6021	170M6071	170M6121	170M6171	170M6221	170M6271

† Watts loss at rated current.
††DC voltage rated at 750 Vdc, IR 130 kA DC, UL Recognized, File E12085.
1 Not UL Recognized, 2 Rated voltage: 550 Vac IEC, 3 Rated voltage: 600 Vac IEC, 700 Vac UL, 4 Rated voltage: 600 Vac IEC, 500 Vac UL, 5 Rated voltage: 550 Vac IEC, 500 Vac UL.

For details on electrical characteristics, contact Application Engineering and ask for data sheets: 170K6314 (Size 1*), 170K6316 (Size 1), 170K6318 (Size 2), 170K6320 (Size 3)

170M — Square Body size 00, DIN 43653

1000 Vac (IEC and UL), 20 to 315 A

Square body DIN 43653 bolted tags high speed fuses, for the protection of DC common bus, DC drives, power converters/ rectifiers and reduced rated voltage starters. Available with indicator or Type T indicator for a microswitch.

Ratings

- Volts
  - 1000 Vac (IEC and UL 20-250 A)
  - 900 Vac (IEC, 315 A)
- Amps 20-315 A
- IR 125 kA RMS Sym.

Operating class aR

Agency information

- Designed and tested to IEC 60269 Part 4
- UL Recognized, E125085, JFHR2 (20-250 A)
- CSA Class 53787, File 1422-30 (20-250 A)
- CE

Fuse size	Rated voltage	Rated current (amps)	I^2t (A^2s) Pre-arcing	I^2t (A^2s) Clearing at rated voltage	Watts loss (W)†	Catalog no. 00/80 with indicator	Catalog no. 00TN/80 Type T indicator for micro
00	1000 Vac (IEC/UL)	20	20	140	5	170M4802	170M4822
		25	30	210	7	170M4803	170M4823
		32	55	390	9	170M4804	170M4824
		35	69	500	10	170M4805	170M4825
		40	100	690	11	170M4806	170M4826
		50	170	1200	13	170M4807	170M4827
		63	280	2000	18	170M4808	170M4828
		80	500	3500	22	170M4809	170M4829
		100	950	6850	25	170M4810	170M4830
		125	1500	11,500	33	170M4811	170M4831
		160	3000	22,000	37	170M4812	170M4832
		200	5600	40,500	40	170M4813	170M4833
		250	10,000	74,000	48	170M4814	170M4834
	900 Vac (IEC)	315	18,000	115,000	58	170M4815	170M4835

† Watts loss at rated current.

Dimensions — mm

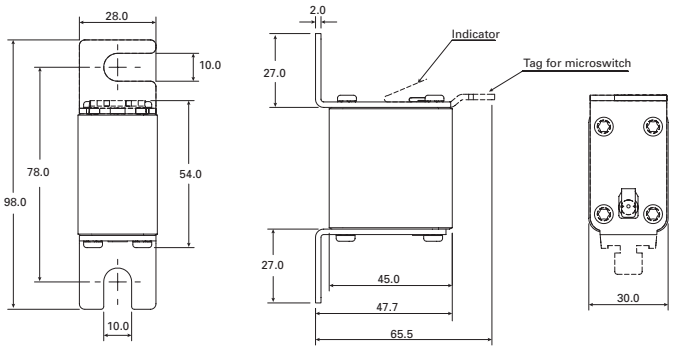

For details on electrical characteristics, contact Application Engineering and ask for Data sheet no. 170K8504

170M — Square Body size 1* to 3, DIN 43653

1000 Vac (IEC and UL), 50 to 1400 A

Square body DIN 43653 bolted tags high speed fuses, for the protection of DC common bus, DC drives, power converters/ rectifiers and reduced rated voltage starters. Available with a Type T or K indicator for a microswitch.

Ratings

- Volts
  - 1000 Vac (IEC, 50-1250 A), 900 Vac (IEC, 1400 A)
  - 1000 Vac (UL size 2, size 3, 315-1100 A only)
  - 900 Vdc (UL, see catalog number table for specific fuses)
- Amps 50-1400 A
- IR 125 kA RMS Sym.

Operating class aR

Agency Information

- Designed and tested to IEC 60269 Part 4
- UL Recognized, JFHR2, E125085 (only sizes 2 and 3)
- CCC (only size 3, 315-1100 A)
- CE

Dimensions — mm

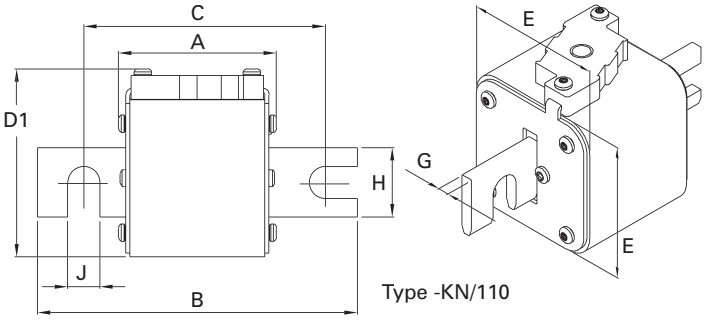

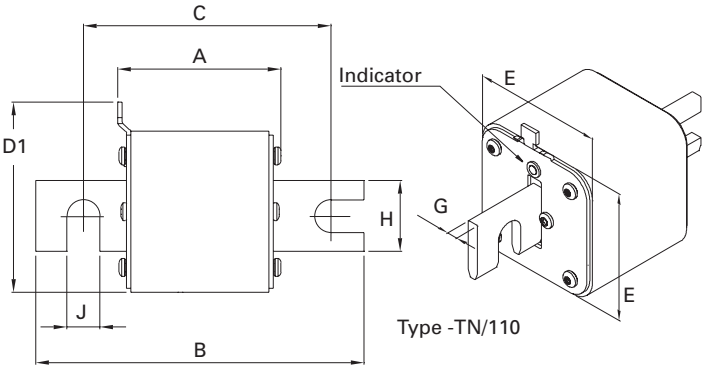

Type -KN/110

Size	A	B	C	D1 (max)	E	G	H	J
1*KN/110	80	138	108	61	43	6	22	11
1KN/110	80	138	108	69	51	6	25	11
2KN/110	80	138	108	77	59	6	25	11
3KN/110	81	139	108	92	74	6	30	11

Type -TN/110

Size	A	B	C	D1 (max)	E	G	H	J
1*TN/110	80	138	108	61	43	6	22	11
1TN/110	80	138	108	69	51	6	25	11
2TN/110	80	138	108	75	59	6	25	11
3TN/110	81	139	108	90	74	6	30	11

For details on electrical characteristics, contact Application Engineering and ask for data sheets:170K8564 (Size 1*), 170K8566 (Size 1), 170K8568 (Size 2), 170K8570 (Size 3)

170M — Square Body size 1* to 3, DIN 43653

1000 Vac (IEC and UL), 50 to 1400 A

Fuse size	Rated voltage	Rated current (amps)	I²t (A²s) Pre-arcing	I²t (A²s) Clearing at rated voltage	Watts loss (W)†	Catalog no. -KN/110 Type K indicator for microswitch	Catalog no. -TN/110 Type T indicator for microswitch
1*	1000 Vac (IEC)	50	135	815	20	170M3965	170M3981
		63	215	1300	25	170M3966	170M3982
		80	460	2750	30	170M3967	170M3983
		100	860	5100	35	170M3968	170M3984
		125	1450	8600	40	170M3969	170M3985
		160	2850	17,500	45	170M3970	170M3986
		200	4950	29,500	50	170M3971	170M3987
		250	9550	57,000	55	170M3972	170M3988
		315	21,500	130,000	65	170M3973	170M3989
		350	29,000	175,000	70	170M3974	170M3990
		400	42,000	250,000	75	170M3975	170M3991
1	1000 Vac (IEC)	160	2200	13,500	40	170M4965	170M4980
		200	4150	24,500	45	170M4966	170M4981
		250	7750	46,000	52	170M4967	170M4982
		315	16,500	98,500	60	170M4968	170M4983
		350	21,500	130,000	65	170M4969	170M4984
		400	31,000	185,000	70	170M4970	170M4985
		450	44,500	265,000	80	170M4971	170M4986
		500	63,000	375,000	85	170M4972	170M4987
		550	84,500	500,000	90	170M4973	170M4988
		630	125,000	755,000	98	170M4974	170M4989
2	1000 Vac (IEC and UL)	250	6750	40,000	65	170M5966	170M5981
		315	13,500	81,500	75	170M5967	170M5982
		350	16,500	99,000	80	170M5968	170M5983
		400	26,000	155,000	85	170M5969	170M5984
		450	35,500	210,000	90	170M5970	170M5985
		500	49,500	295,000	95	170M5971	170M5986
		550	66,000	390,000	100	170M5972	170M5987
		630	93,500	555,000	110	170M5973	170M5988
		700	130,000	770,000	115	170M5974	170M5989
		800	195,000	1,200,000	125	170M5975	170M5990
3	1000 Vac (IEC and UL)	315	9200	54,500	90	170M8614	170M8629††
		350	13,000	77,500	95	170M8615	170M8630††
		400	19,000	115,000	105	170M8616	170M8631††
		450	27,000	160,000	107	170M8617	170M8632††
		500	37,500	225,000	110	170M8618	170M8633††
		550	52,000	310,000	115	170M8619	170M8634††
		630	82,500	490,000	120	170M8620	170M8635††
		700	115,000	700,000	125	170M8621	170M8636††
		800	170,000	1,050,000	135	170M8622	170M8637††
		900	250,000	1,500,000	145	170M8623	170M8638††
		1000	340,000	2,050,000	150	170M8624	170M8639††
		1100	460,000	2,750,000	155	170M8625	170M8640††
	1000 Vac (IEC)	1250	575,000	3,400,000	175	170M8626	170M8641
	900 Vac (IEC)	1400	795,000	4,200,000	185	170M8627	170M8642

† Watts loss at rated current.
††DC voltage rated at 900 Vdc, UL Recognized, File E125085.

For details on electrical characteristics, contact Application Engineering and ask for data sheets:170K8564 (Size 1*), 170K8566 (Size 1), 170K8568 (Size 2), 170K8570 (Size 3)

170M — Square Body size 1* to 3, DIN 43653

1250 Vac (IEC), 1300 Vac (UL), 50 to 1400 A

Square body DIN 43653 bolted tags high speed fuses, for the protection of DC common bus, DC drives, power converters/ rectifiers and reduced rated voltage starters.

Ratings

- Volts
  - 1100 to 1300 Vac (see catalog number table)
  - 900 and 1000 Vdc (UL, see catalog number table for specific fuses)
- Amps 50-1400 A
- IR 100 kA RMS Sym.

Operating class aR

Agency information

- Designed and tested to IEC 60269 Part 4
- UL Recognized, JFHR2*, E125085
- CSA Class 53787, File 1422-30*
- CE

* Consult your Bussmann series product representative for status.

Dimensions — mm

1mm = 0.0394"

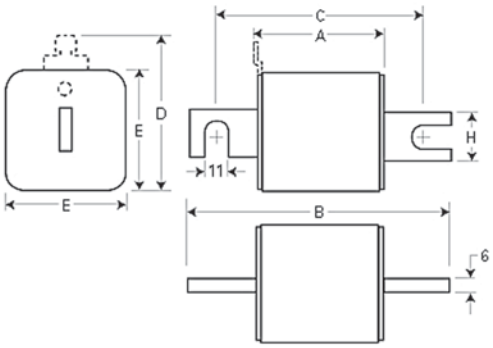

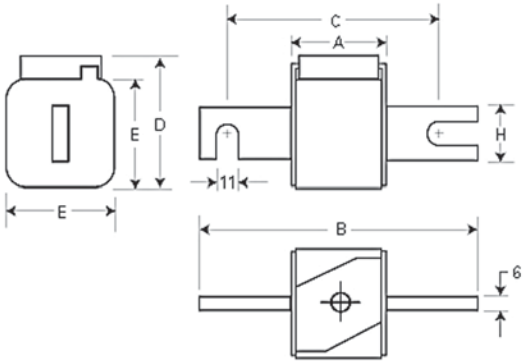

Type-/110-TN/110

Size	A	B	C	D[1]	E	H	K
1*	80	138	108	58	45	20	11
1	80	138	108	66	53	25	11
2	80	138	108	75	61	25	11
3	81	139	108	90	76	30	11

1 Clip on microswitch valid for -TN/110 fuses.

Type-KN/110

Size	A	B	C	D	E	H	K
1*	80	138	108	60	45	20	11
1	80	138	108	69	53	25	11
2	80	138	108	77	61	25	11
3	81	139	108	92	76	30	11

For details on electrical characteristics, contact Application Engineering and ask for data sheets:170K6630 (Size 1*), 170K6632 (Size 1), 170K6634 (Size 2), 170K6636 (Size 3)

170M — Square Body size 1* to 3, DIN 43653, 170M

1250 Vac (IEC), 1300 Vac (UL), 50 to 1400 A

Fuse size	Rated voltage	Rated current (amps)	I²t (A²s) Pre-arcing	I²t (A²s) Clearing at 1000 Vac	I²t (A²s) Clearing at 1250 Vac	Watts loss (W)†	Catalog no. -/110 with indicator	Catalog no. -TN/110 Type T indicator for microswitch	Catalog no. -KN/110 Type K indicator for microswitch
1*	1250 Vac (IEC) 1300 Vac (UL)	50	135	815	1100	15	170M3138	170M3188	170M3238
		63	215	1300	1750	20	170M3139	170M3189	170M3239
		80	420	2500	3350	25	170M3140	170M3190	170M3240
		100	750	4450	5950	30	170M3141	170M3191	170M3241
		125	1450	9000	11,500	35	170M3142	170M3192	170M3242
		160	2600	16,000	21,000	40	170M3143	170M3193	170M3243
		200	5150	31,000	41,000	45	170M3144	170M3194	170M3244
		250	9200	54,500	73,000	55	170M3145	170M3195	170M3245
		315	18,500	115,000	150,000	60	170M3146	170M3196	170M3246
		350	27,000	165,000	220,000	65	170M3147	170M3197	170M3247
		400	53,000	265,000	335,000	70	170M3148	170M3198	170M3248
1	1250 Vac (IEC) 1300 Vac (UL)	160	1900	11,500	15,500	45	170M4138††	170M4188††	170M4238††
		200	3800	22,500	30,000	50	170M4139††	170M4189††	170M4239††
		250	7750	46,000	61,500	60	170M4140††	170M4190††	170M4240††
		315	15,000	90,000	120,000	65	170M4141††	170M4191††	170M4241††
		350	20,000	125,000	165,000	70	170M4142††	170M4192††	170M4242††
		400	29,500	175,000	235,000	75	170M4143††	170M4193††	170M4243††
		450	42,000	250,000	335,000	80	170M4144††	170M4194††	170M4244††
		500	69,500	340,000	435,000	85	170M4145	170M4195	170M4245
		550	95,000	465,000	590,000	95	170M4146	170M4196	170M4246
	1100 Vac (IEC)	630	130,000	660,000	N/A	100	170M4147[1]	170M4197[1]	170M4247[1]
2	1250 Vac (IEC) 1300 Vac (UL)	250	6500	38,500	51,500	65	170M5138	170M5188	170M5238
		280	9350	55,500	74,500	70	170M5139	170M5189	170M5239
		315	13,000	77,500	105,000	75	170M5140	170M5190	170M5240
		350	16,500	97,500	135,000	80	170M5141	170M5191	170M5241
		400	23,000	140,000	180,000	85	170M5142	170M5192	170M5242
		450	34,000	205,000	270,000	90	170M5143	170M5193	170M5243
		500	48,000	285,000	380,000	95	170M5144	170M5194	170M5244
		550	62,000	370,000	495,000	100	170M5145	170M5195	170M5245
		630	115,000	575,000	730,000	120	170M5146††	170M5196††	170M5246
		700	160,000	795,000	1,050,000	125	170M5147††	170M5197††	170M5247
		800	245,000	1,200,000	1,550,000	130	170M5148††	170M5198††	170M5248
	1100 Vac (IEC/UL)	900	360,000	1,750,000	N/A	135	170M5149††	170M5199††	170M5249††
		1000	480,000	2,350,000	N/A	145	170M5150††	170M5200††	170M5250††
3	1300 Vac (UL)	315	9500	58,000	77,500	85	170M6138††	170M6188††	170M6238††
		350	13,500	81,500	110,000	90	170M6139††	170M6189††	170M6239††
		400	19,500	120,000	160,000	95	170M6140††	170M6190††	170M6240††
		450	31,000	185,000	245,000	100	170M6141††	170M6191††	170M6241††
		500	39,000	235,000	310,000	105	170M6142††	170M6192††	170M6242††
		550	55,000	325,000	435,000	110	170M6143††	170M6193††	170M6243††
		630	83,500	495,000	665,000	115	170M6144††	170M6194††	170M6244††
		700	115,000	705,000	940,000	120	170M6145††	170M6195††	170M6245††
		800	205,000	995,000	1,300,000	125	170M6146†††	170M6196†††	170M6246[1]
		900	305,000	1,500,000	1,900,000	130	170M6147†††	170M6197†††	170M6247[1]
		1000	450,000	2,150,000	2,750,000	135	170M6148†††	170M6198†††	170M6248[1]
		1100	575,000	2,800,000	3,600,000	160	170M6149†††	170M6199†††	170M6249[1]
	1100 Vac (IEC)	1250	810,000	3,950,000	N/A	170	170M6150[1],††	170M6200[1]	170M6250[1]
		1400	1,250,000	6,000,000	N/A	175	170M6151[1],††	170M6201[1]	170M6251[1]

† Watts loss at rated current.
†† DC voltage rated at 900 Vdc, UL Recognized, File E125085.
††† DC voltage rated at 1000 Vdc, UL Recognized, File E125085.
1 Not UL Recognized.

For details on electrical characteristics, contact Application Engineering and ask for data sheets:170K6630 (Size 1*), 170K6632 (Size 1), 170K6634 (Size 2), 170K6636 (Size 3)

170M — Square Body size 00 to 3, DIN 43620, full range (gR)

690 Vac (IEC), 10 to 800 A

Square body DIN 43653 blade high speed fuses. Full range protection fuses provide both overload and short-circuit protection. Fuses come with Type T indicator for a microswitch.

Ratings

- Volts 690 Vac (IEC)
- Amps 10-800 A
- IR 200 kA RMS Sym.

Operating class gR

Agency information

- Designed and tested to IEC 60269 Part 4
- CE

Dimensions — mm

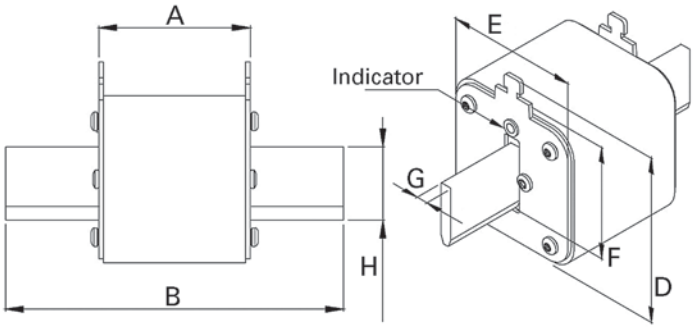

Size	A	B	D (max)	E (max)	F	G	H (min)
00	49	78.5	60	30	35	6	15
1	68	135	66	52	40	6	20
2	68	150	74	60	48	6	25
3	68	150	89	75	60	6	32

For details on electrical characteristics, contact Application Engineering and ask for data sheets:170K6412 (Size 00), 170K6416 (Size 1), 170K6418 (Size 2), 170K6420 (Size 3)

170M — Square Body size 00 to 3, DIN 43620, full range (gR)

690 Vac (IEC), 10 to 800 A

Fuse size	Rated voltage	Rated current (amps)[1]	I²t (A²s) Pre-arcing	I²t (A²s) Clearing at 690 Vac	Watts loss (W)†	Catalog no. - Type T indicator for microswitch
00	690 Vac (IEC)	10	3.8	20	3.5	170M2691
		16	7.2	38	5.5	170M2692
		20	13.0	70	6.0	170M2693
		25	24.0	125	8.0	170M2694
		32	53.0	275	9.0	170M2695
		40	95.0	490	10.0	170M2696
		50	185.0	1000	11.0	170M2697
		63	345.0	1800	14.0	170M2698
		80	695.0	3600	16.0	170M2699
		100	1250.0	6650	19.0	170M2700
		125	2300.0	12,000	23.0	170M2701
		160	4350.0	22,500	29.0	170M2702
1	690 Vac (IEC)	50	135.0	705	12.0	170M4176
		63	245.0	1300	15.0	170M4177
		80	500.0	2600	17.0	170M4178
		100	950.0	4850	20.0	170M4179
		125	1850.0	9500	23.0	170M4180
		160	3450.0	18,000	28.0	170M4181
		200	6750.0	34,500	31.0	170M4182
		250	13,500.0	70,500	35.0	170M4183
		315	26,000.0	135,000	41.0	170M4184
		350	34,000.0	175,000	45.0	170M4185
		400	48,500.0	250,000	48.0	170M4186
2	690 Vac (IEC)	200	5650.0	29,000	33.0	170M5881
		250	10,000.0	52,500	40.0	170M5882
		315	19,500.0	105,000	46.0	170M5883
		350	26,000.0	135,000	50.0	170M5884
		400	39,500.0	205,000	53.0	170M5885
		450	55,500.0	290,000	59.0	170M5886
		500	73,000.0	375,000	66.0	170M5887
		550	100,000.0	515,000	70.0	170M5888
		630	150,000.0	770,000	79.0	170M5889
3	690 Vac (IEC)	350	23,000.0	120,000	55.0	170M6080
		400	34,000.0	175,000	59.0	170M6081
		450	48,500.0	250,000	62.0	170M6082
		500	64,000.0	330,000	67.0	170M6083
		550	84,500.0	435,000	70.0	170M6084
		630	125,000.0	645,000	85.0	170M6085
		700	160,000.0	840,000	93.0	170M6086
		800	245,000.0	1,300,000	99.0	170M6087

† Watts loss at rated current.

1 The RMS Amp rating of this fuses range is given with open fuse blocks connected to copper conductors according to IEC 60269, Part 1, table 10. When used in enclosed fuse blocks/disconnects, derating factors have to be observed. Please contact Eaton's Bussmann Division for application assistance bulehighspeedtechnical@eaton.com.

For details on electrical characteristics, contact Application Engineering and ask for data sheets:170K6412 (Size 00), 170K6416 (Size 1), 170K6418 (Size 2), 170K6420 (Size 3)

170M — Square Body size 000 to 3, DIN 43620, dual indicator fuses

690 Vac (IEC), 700 Vac (UL), 10 to 1600 A

Square body DIN 43620 blade high speed fuses with dual indicator system: one indicator in the fuse body and another one in the metallic end plate. Interchangeable with existing high speed DIN 43620 fuses for the protection of UPS, soft starters, solid state relays, variable speed drives, rectifiers and inverters.

Ratings

- Volts
  - 690 Vac (IEC)
  - 700 Vac (UL)
- Amps 10-1600 A
- IR 200 kA RMS Sym.

Operating class

- gR (size 000, 10-63 A)
- aR (others)

Agency information

- Designed and tested to IEC 60269 Part 4
- UL Recognized, JFHR2, E125085
- CSA Class 1422-30, (53787) with the exception of catalog number 170M4867D
- CE

Dimensions — mm

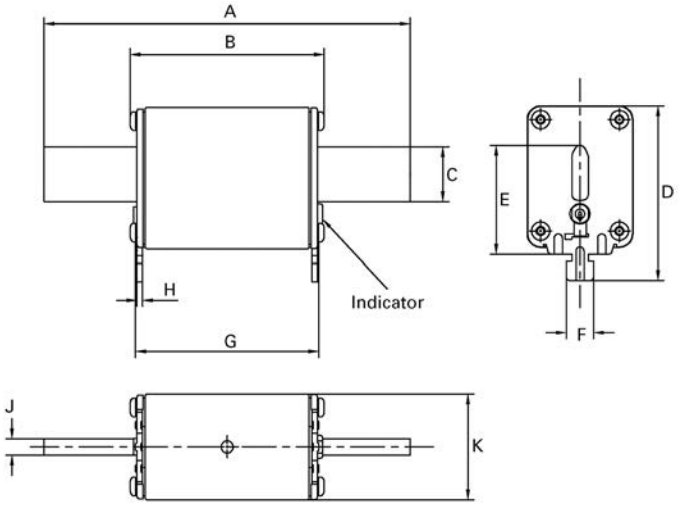

Size	A	B	C	D	E	F	G	H	J	K
000	78.5	53.0	15.0	52	35	10	49.7	1.5	6	20.5
00	78.5	53.0	15.0	59	35	10	49.7	2.0	6	30.0
1	135.0	71.4	20.0	64	40	10	67.5	2.0	6	40.0
2	150.0	71.4	25.1	72	48	10	67.5	2.0	6	54.0
3	150.0	72.4	32.0	87	60	10	68.5	2.5	6	71.0

For details on electrical characteristics, contact Application Engineering and ask for data sheets:170K6386 (Size 000 and 00), 170K6388 (Size 1), 170K6390 (Size 2), 170K6392 (Size 3)

170M — Square Body size 000 to 3, DIN 43620, dual indicator fuses

690 Vac (IEC), 700 Vac (UL), 10 to 1600 A

Fuse size	Rated voltage	Rated current (amps)	Max permissible load current	I^2t (A^2s) Pre-arcing	I^2t (A^2s) Clearing at 690 Vac	Watts loss (W)[3]	Catalog no.
000	690 Vac (IEC) 700 Vac (UL)	10	10	4	27	2.5	170M1558D
		16	16	7	51	4	170M1559D
		20	20	11.5	82.5	5	170M1560D
		25	25	19	140	6	170M1561D
		32	32	40	285	7	170M1562D
		40	40	65	490	8.5	170M1563D
		50	50	115	815	9.5	170M1564D
		63	63	215	1550	11.5	170M1565D
		80	80	380	2700	15	170M1566D
		100	100	695	4950	16.5	170M1567D
		125	125	1180	8250	21.5	170M1568D
		160	160	2300	16,500	25	170M1569D
		200	200	4350	31,000	29.5	170M1570D
		250	250	7900	56,000	35.5	170M1571D
00	690 Vac (IEC) /700 Vac (UL)	315	315	12,000	84,500	45	170M1572D
1	690 Vac (IEC) 700 Vac (UL)	40	25	40	285	4	170M3808D
		50	30	78	550	4.5	170M3809D
		63	38	120	850	6.5	170M3810D
		80	50	185	1350	8.5	170M3811D
		100	60	360	2600	10	170M3812D
		125	75	550	3900	11	170M3813D
		160	95	1150	8250	12	170M3814D
		200	120	2300	16,500	12.5	170M3815D
		250	150	4350	31,000	16	170M3816D
		315	190	7300	52,000	20	170M3817D
		350	210	10,000	73,000	21.5	170M3818D
		400	240	16,000	115,000	23	170M3819D
		450	270	21,500	155,000	26.5	170M4863D
		500	300	27,000	190,000	28.5	170M4864D
		550	330	33,500	240,000	33	170M4865D
		630	380	48,500	345,000	37.5	170M4866D
		700	420	69,500	495,000	39	170M4867D[1]
2	690 Vac (IEC) 700 Vac (UL)	400	240	11,000	79,000	29	170M5808D
		450	270	16,000	115,000	32	170M5809D
		500	300	21,500	155,000	34	170M5810D
		550	330	29,000	215,000	36	170M5811D
		630	380	41,000	295,000	42	170M5812D
		700	420	60,500	430,000	43	170M5813D
		800	480	86,000	610,000	48	170M5814D
		900	540	125,000	895,000	52	170M5820D
		1000	600	180,000	1,300,000	53	170M5816D
		1100	660	245,000	1,750,000	56	170M5817D
3	690 Vac (IEC) 700 Vac (UL)	500	300	14,000	99,500	43	170M6808D
		550	330	19,500	140,000	44	170M6809D
		630	380	31,000	220,000	45	170M6810D
		700	420	45,000	320,000	46	170M6811D
		800	480	69,500	490,000	48	170M6812D
		900	540	100,000	720,000	50	170M6813D
		1000	600	140,000	985,000	56	170M6814D
		1100	660	190,000	1,400,000	57	170M6892D
		1250	750	300,000	2,150,000	61	170M8554D
		1400	840	380,000	2,700,000	70	170M8555D
		1500	900	470,000	3,350,000	72	170M8556D
		1600	960	585,000	4,150,000	74	170M8557D

1 170M4867D is not UL Recognized.
3 Given at maximum load rated current, please refer to data sheets for further details.

For details on electrical characteristics, contact Application Engineering and ask for data sheets:170K6386 (Size 000 and 00), 170K6388 (Size 1), 170K6390 (Size 2), 170K6392 (Size 3)

170M — Square Body size 00, DIN 43620

1000 Vac (IEC and UL), 20 to 225 A

Square body DIN 43620 blade style high speed fuses for the protection of DC common bus, DC drives, power converters/rectifiers and reduced rated voltage starters. Fuses come with Type T indicator for microswitches.

Ratings

- Volts
  - 1000 Vac (IEC and UL)
  - 900 Vac (200 and 225 A)
- Amps 20-225 A
- IR 125 kA RMS Sym.

Operating class aR

Agency information

- Designed and tested to IEC 60269 Part 4
- UL Recognized (20-160 A)
- CSA (20-160 A)
- CE

Fuse size	Rated voltage	Rated current (amps)	I²t (A²s) Pre-arcing	I²t (A²s) Clearing at 1000 Vac	Watts loss (W)†	Catalog no. with Type T indicator for microswitch
00	1000 Vac (IEC/UL)	20	15	110	8.5	170M2673
		25	28.5	210	9.5	170M2674
		32	53	390	11	170M2675
		35	69	500	12	170M2676
		40	105	760	13	170M2677
		50	215	1550	14	170M2678
		63	380	2750	16	170M2679
		80	815	5900	18	170M2680
		100	1550	11,500	21	170M2681
		125	3000	22,000	23	170M2682
		160	6250	45,000	26	170M2683
00	900 Vac (IEC)	200	12,000	86,500	31	170M2684
		225	18,000	115,000	33	170M2685

† Watts loss at rated current.

Dimensions — mm

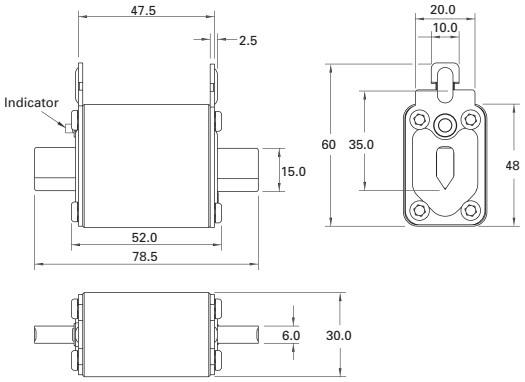

For details on electrical characteristics, contact Application Engineering and ask for Data sheet no. 170K8506

170M — Square Body size 1* to 3, French style

690 Vac (IEC), 700 Vac (UL), 40 to 1600 A

Square body French style high speed fuses for the protection of DC common bus, DC drives, power converters/rectifiers and reduced rated voltage starters. Available with Type T or K indicators for microswitches.

Ratings

- Volts
  - 690 Vac (IEC)
  - 700 Vac (UL)
- Amps 40-1600 A
- IR 200 kA RMS Sym.

Operating class aR

Agency information

- Designed and tested to IEC 60269 Part 4
- UL Recognized, JFHR2, E125085
- CSA Class 1422-30, (53787) on sizes (1, 2, 3) only
- CCC (please consult bulehighspeedtechnical@eaton.com for status)
- CE

Dimensions — mm

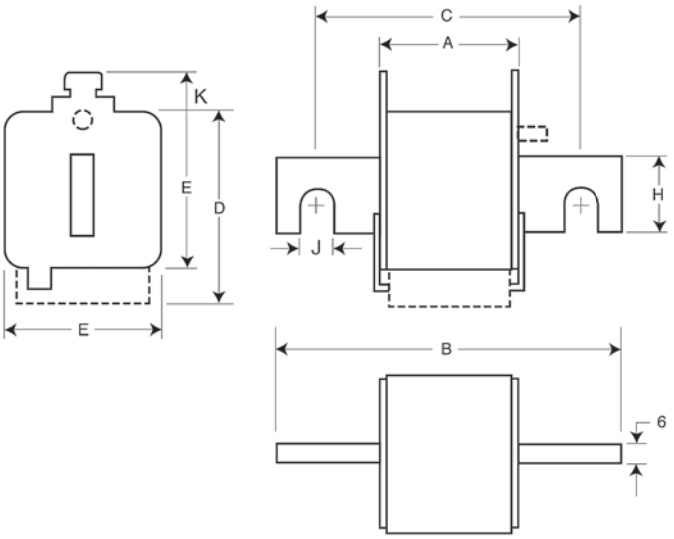

Type -E/-, -EKN/-

Size	A	B	C	D	E	H	J	K
1*	50	102	76	59	45	18	9	13
1	50	111	86	69	53	25	11	11
2	50	126	91	77	61	30	13	12
3	51	126	91	92	76	36	13	13

For details on electrical characteristics, contact Application Engineering and ask for data sheets:170K6314 (Size 1*), 170K6316 (Size 1), 170K6318 (Size 2), 170K6320 (Size 3)

170M —Square Body size 1* to 3, French style

690 Vac (IEC), 700 Vac (UL), 40 to 1600 A

Fuse size	Rated voltage	Rated current (amps)	I²t (A²s) Pre-arcing	I²t (A²s) Clearing at 660 Vac	Watts loss (W)†	Catalog no. -E/- Type T indicator for microswitch	Catalog no. -EKN/- Type K indicator for microswitch
1*	690 Vac (IEC) 700 Vac (UL)	40	40	270	9	170M3308	170M3358
		50	77	515	11	170M3309	170M3359
		63	115	770	14	170M3310	170M3360
		80	185	1250	18	170M3311	170M3361
		100	360	2450	21	170M3312	170M3362
		125	550	3700	26	170M3313	170M3363
		160	1100	7500	30	170M3314	170M3364
		200	2200	15,000	35	170M3315	170M3365
		250	4200	28,500	40	170M3316	170M3366
		315	7000	46,500	50	170M3317	170M3367
		350	10,000	68,500	55	170M3318	170M3368
		400	15,000	105,000	60	170M3319	170M3369
		450	21,000	140,000	65	170M3320	170M3370
		500	27,000	180,000	70	170M3321	170M3371
1	690 Vac (IEC) 700 Vac (UL)	200	1650	11,500	45	170M4308	170M4358
		250	3100	21,000	55	170M4309	170M4359
		315	6200	42,000	58	170M4310	170M4360
		350	8500	59,000	60	170M4311	170M4361
		400	13,500	91,500	65	170M4312	170M4362
		450	17,000	120,000	70	170M4313	170M4363
		500	25,000	170,000	72	170M4314	170M4364
		550	34,000	230,000	75	170M4315	170M4365
		630	52,000	350,000	80	170M4316	170M4366
		700	69,500	465,000	85	170M4317	170M4367
		800	105,000	725,000	95	170M4318	170M4368
2	690 Vac (IEC) 700 Vac (UL)	400	11,000	74,000	65	170M5308	170M5358
		450	15,500	105,000	70	170M5309	170M5359
		500	21,500	145,000	75	170M5310	170M5360
		550	28,000	190,000	80	170M5311	170M5361
		630	41,000	275,000	90	170M5312	170M5362
		700	60,500	405,000	95	170M5313	170M5363
		800	86,000	575,000	105	170M5314	170M5364
		900	125,000	840,000	110	170M5315	170M5365
		1000	180,000	1,250,000	115	170M5316	170M5366
3	690 Vac (IEC) 700 Vac (UL)	500	14,000	95,000	95	170M6308	170M6358
		550	19,500	135,000	100	170M6309	170M6359
		630	31,000	210,000	105	170M6310	170M6360
		700	44,500	300,000	110	170M6311	170M6361
		800	69,500	465,000	115	170M6312	170M6362
		900	100,000	670,000	120	170M6313	170M6363
		1000	140,000	945,000	125	170M6314	170M6364
		1100	190,000	1,300,000	130	170M6315	170M6365
		1250	290,000	1,950,000	140	170M6316	170M6366
		1400	370,000	2,450,000	155	170M6317	170M6367
		1500	460,000	3,100,000	160	170M6318	170M6368
		1600	580,000	3,900,000	160	170M6319	170M6369

† Watts loss at rated current.

For details on electrical characteristics, contact Application Engineering and ask for data sheets:170K6314 (Size 1*), 170K6316 (Size 1), 170K6318 (Size 2), 170K6320 (Size 3)

170M — Square Body size 1* to 3, US style

690 Vac (IEC), 700 Vac (UL), 40 to 2000 A

Square body US style bolted tags high speed fuses for the protection of DC common bus, DC drives, power converters/ rectifiers and reduced rated voltage starters. Available with Type K indicator for a microswitch.

Ratings

- Volts
  - 500 to 700 Vac (see catalog number table)
  - 750 Vdc (UL, see catalog number table for specific fuses)
- Amps 40-2000 A
- IR 200 kA RMS Sym.

Operating class aR

Agency information

- Designed and tested to IEC 60269 Part 4
- UL Recognized, JFHR2*, E125085
- CSA Class 53787, File 1422-30*
- CCC*
- CE

* Consult your Bussmann series product representative for status.

Dimensions — mm

1mm = 0.0394"

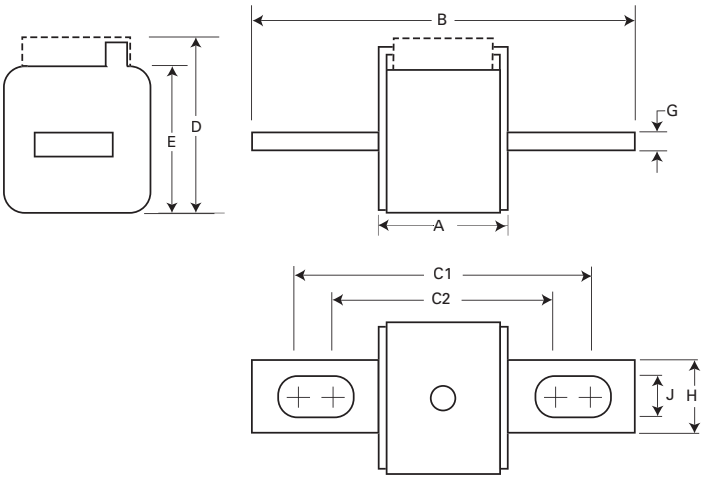

Type -FU/-, -FKE/-, FU/115-, -FKE/115

Size	A	B	B1	C1	C1†	C2	C2†	D	E	G	H	J
1*	50	110	148	85	123	72	110	59	45	6	20	10
1	50	136	157	104	126	78	100	69	53	6	25	14
2	50	135	159	105	125	78	99	77	61	6	25	14
3	51	135	155	106	125	77	97	92	76	6	36	16

† Valid for fuss types -FU/115 and -FKE/115.

For details on electrical characteristics, contact Application Engineering and ask for data sheets:170K6314 (Size 1*), 170K6316 (Size 1), 170K6318 (Size 2), 170K6320 (Size 3)

170M — Square Body size 1* to 3, US style

690 Vac (IEC), 700 Vac (UL), 40 to 2000 A

Fuse size	Rated voltage	Rated current (amps)	I²t (A²s) Pre-arcing	I²t (A²s) Clearing at 660 Vac	Watts loss (W)†	Catalog no. -FU/- without indicator	Catalog no. -FKE/- Type K indicator for microswitch	Catalog no. -FU/115 without indicator	Catalog no. -FKE/115 Type K indicator for microswitch
1*	690 Vac (IEC) 700 Vac (UL)	40	40	270	9	170M3608	170M3658	170M3708	170M3758
		50	70	515	11	170M3609	170M3659	170M3709	170M3759
		63	115	770	14	170M3610	170M3660	170M3710	170M3760
		80	185	1250	18	170M3611	170M3661	170M3711	170M3761
		100	360	2450	21	170M3612	170M3662	170M3712	170M3762
		125	550	3700	26	170M3613	170M3663	170M3713	170M3763
		160	1100	7500	30	170M3614	170M3664	170M3714	170M3764
		200	2200	15,000	35	170M3615	170M3665	170M3715	170M3765
		250	4200	28,500	40	170M3616	170M3666	170M3716	170M3766
		315	7000	46,500	50	170M3617	170M3667	170M3717	170M3767
		350	10,000	68,500	55	170M3618	170M3668	170M3718	170M3768
		400	15,000	105,000	60	170M3619	170M3669	170M3719	170M3769
		450	21,000	140,000	65	170M3620	170M3670	170M3720	170M3770
		500	27,000	180,000	70	170M3621	170M3671	170M3721	170M3771
		550	34,000	230,000	75	170M3622	170M3672	170M3722	170M3772
		630	48,500	325,000	80	170M3623	170M3673	170M3723	170M3773
1	690 Vac (IEC) 700 Vac (UL)	200	1650	11,500	45	170M4608	170M4658	170M4708	170M4758
		250	3100	21,000	55	170M4609	170M4659	170M4709	170M4759
		315	6200	42,000	58	170M4610	170M4660	170M4710	170M4760
		350	8500	59,000	60	170M4611	170M4661	170M4711	170M4761
		400	13,500	91,500	65	170M4612	170M4662	170M4712	170M4762
		450	17,000	120,000	70	170M4613	170M4663	170M4713	170M4763
		500	25,000	170,000	72	170M4614	170M4664	170M4714	170M4764
		550	34,000	230,000	75	170M4615	170M4665	170M4715	170M4765
		630	52,000	350,000	80	170M4616	170M4666	170M4716	170M4766
		700	69,500	465,000	85	170M4617	170M4667	170M4717	170M4767
		800	105,000	725,000	95	170M4618	170M4668	170M4718	170M4768
	550 Vac (IEC)	900	155,000	850,000	100	170M4619	170M4669	170M4719	170M4769
2	690 Vac (IEC) 700 Vac (UL)	400	11,000	74,000	65	170M5608	170M5658	170M5708	170M5758
		450	15,500	105,000	70	170M5609	170M5659	170M5709	170M5759
		500	21,500	145,000	75	170M5610	170M5660	170M5710	170M5760
		550	28,000	190,000	80	170M5611	170M5661	170M5711	170M5761
		630	41,000	275,000	90	170M5612	170M5662	170M5712	170M5762
		700	60,500	405,000	95	170M5613	170M5663	170M5713	170M5763
		800	86,000	575,000	105	170M5614	170M5664	170M5714	170M5764
		900	125,000	840,000	110	170M5615	170M5665	170M5715	170M5765
		1000	180,000	1,250,000	115	170M5616	170M5666	170M5716	170M5766
	600 Vac (IEC) 700 Vac (UL)	1100	245,000	1,600,000	120	170M5617	170M5667	170M5717	170M5767
		1250	365,000	2,400,000	130	170M5618	170M5668	170M5718	170M5768
3	690 Vac (IEC) 700 Vac (UL)	500	14,000	95,000	95	170M6608	170M6658	170M6708	170M6758
		550	19,500	135,000	100	170M6609	170M6659	170M6709	170M6759
		630	31,000	210,000	105	170M6610	170M6660	170M6710	170M6760
		700	44,500	300,000	110	170M6611	170M6661	170M6711	170M6761
		800	69,500	465,000	115	170M6612	170M6662	170M6712	170M6762
		900	100,000	670,000	120	170M6613	170M6663	170M6713	170M6763
		1000	140,000	945,000	125	170M6614	170M6664	170M6714	170M6764
		1100	190,000	1,300,000	130	170M6615	170M6665	170M6715	170M6765
		1250	290,000	1,950,000	140	170M6616	170M6666	170M6716	170M6766
		1400	370,000	2,450,000	155	170M6617	170M6667	170M6717	170M6767
		1500	460,000	3,100,000	160	170M6618	170M6668	170M6718	170M6768
		1600	580,000	3,900,000	160	170M6619	170M6669	170M6719	170M6769
	600 Vac (IEC) 500 Vac (UL)	1800	880,000	5,250,000	165	170M6620††	170M6670[1]	170M6720††	170M6770
	550 Vac (IEC) 500 Vac (UL)	2000	1,150,000	6,350,000	175	170M6621	170M6671[2]	170M6721	170M6771

† Watts loss at rated current.
††DC voltage rated at 750 Vdc, UL Recognized, File E125085.
1 170M6670 600 Vac (IEC)/550 Vac.
2 170M6671 550 Vac (IEC and UL).

For details on electrical characteristics, contact Application Engineering and ask for data sheets:170K6314 (Size 1*), 170K6316 (Size 1), 170K6318 (Size 2), 170K6320 (Size 3)

170M — Square Body size 1* to 3, US style

1000 Vac (IEC), 50 to 1400 A

Square body US style bolted tags high speed fuses for the protection of DC common bus, DC drives, power converters/ rectifiers and reduced rated voltage starters. Fuses come with Type K indicator for microswitches.

Ratings

- Volts 1000 Vac (IEC) (1400 A 900 Vac)
- Amps 50-1400 A
- IR 125 kA RMS Sym.

Operating class aR

Agency information

- Designed and tested to IEC 60269 Part 4
- UL Recognized, JFHR2, E125085 for size 2 and 3 (315-1100 A)
- CSA Class 53787, File 1422-30 for size 2 and 3 (315-1100 A)
- CCC approval for size 2 only
- CE

Dimensions — mm

1mm = 0.0394"

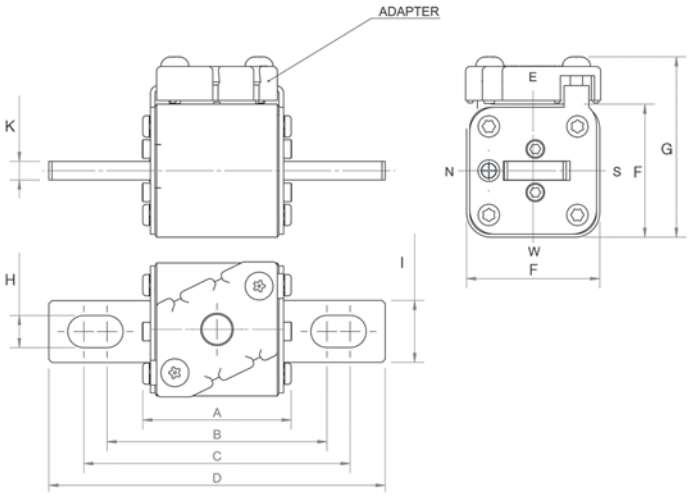

Size	A	B	C	D	F	G	H	I	K
1*FKE/115	74	101.0	130.0	156	43	60	10.4	20	6
1FKE/115	76	102.0	128.0	160	51	68	14.3	25	6
2FKE/115	76	101.1	127.5	160	59	76	14.4	25	6
3FKE/115	76	101.1	127.5	158	74	91	16.0	36	6

For details on electrical characteristics, contact Application Engineering and ask for data sheets:170K8564 (Size 1*), 170K8566 (Size 1), 170K8568 (Size 2), 170K8570 (Size 3)

170M — Square Body size 1* to 3, US style, 170M

1000 Vac (IEC), 50 to 1400 A

Fuse size	Rated voltage	Rated current (amps)	I²t (A²s) Pre-arcing	I²t (A²s) Clearing at 1000 Vac	Watts loss (W)†	Catalog no. -FKE/115 Type K indicator for microswitch
1*	1000 Vac (IEC)	50	135	815	20	170M3531
		63	215	1300	25	170M3532
		80	460	2750	30	170M3533
		100	860	5100	35	170M3534
		125	1450	8600	40	170M3535
		160	2850	17,500	45	170M3536
		200	4950	29,500	50	170M3537
		250	9550	57,000	55	170M3538
		315	21,500	130,000	65	170M3539
		350	29,000	175,000	70	170M3540
		400	42,000	250,000	75	170M3541
1	1000 Vac (IEC)	160	2200	13,500	40	170M4531
		200	4150	24,500	50	170M4532
		250	7750	46,000	55	170M4533
		315	16,500	98,500	65	170M4534
		350	21,500	130,000	70	170M4535
		400	31,000	185,000	75	170M4536
		450	44,500	265,000	80	170M4537
		500	63,000	375,000	85	170M4538
		550	84,500	500,000	90	170M4539
		630	125,000	755,000	98	170M4540
2	1000 Vac (IEC/UL)	250	6750	40,000	65	170M5531
		315	13,500	81,500	75	170M5532
		350	16,500	99,000	80	170M5533
		400	26,000	155,000	85	170M5534
		450	35,500	210,000	90	170M5535
		500	49,500	295,000	95	170M5536
		550	66,000	390,000	100	170M5337
		630	93,500	555,000	110	170M5538
		700	130,000	770,000	115	170M5539
		800	195,000	1,200,000	125	170M5540
3	1000 Vac (IEC/UL)	315	9200	54,500	90	170M8531
		350	13,000	77,500	95	170M8532
		400	19,000	115,000	105	170M8533
		450	27,000	160,000	107	170M8534
		500	37,500	225,000	110	170M8535
		550	52,000	310,000	115	170M8536
		630	82,500	490,000	120	170M8537
		700	115,000	700,000	125	170M8538
		800	170,000	1,050,000	135	170M8539
		900	250,000	1,500,000	145	170M8540
		1000	340,000	2,050,000	150	170M8541
		1100	460,000	2,750,000	155	170M8542
	1000 Vac (IEC)	1250	575,000	3,400,000	175	170M8543
	900 Vac (IEC)	1400	795,000	4,200,000	185	170M8544

† Watts loss at rated current.

For details on electrical characteristics, contact Application Engineering and ask for data sheets:170K8564 (Size 1*), 170K8566 (Size 1), 170K8568 (Size 2), 170K8570 (Size 3)

170M — Square Body size 1* to 3, US style

1250 Vac (IEC), 1300 Vac (UL), 50 to 1400 A

Square body US style bolted tags high speed fuses for the protection of DC common bus, DC drives, power converters/ rectifiers and reduced rated voltage starters. Available with Type K indicator for microswitches.

Ratings

- Volts
  - 1250 Vac (IEC)
  - 1300 Vac (UL)
  - 900 Vdc (UL, see catalog number table for specific fuses)
- Amps 50-1400 A
- IR 100 kA RMS Sym.

Operating class aR

Agency information

- Designed and tested to IEC 60269 Part 4
- UL Recognized†
- CSA†
- CCC†
- CE

† Consult your Bussmann series product representative for status.

Dimensions — mm

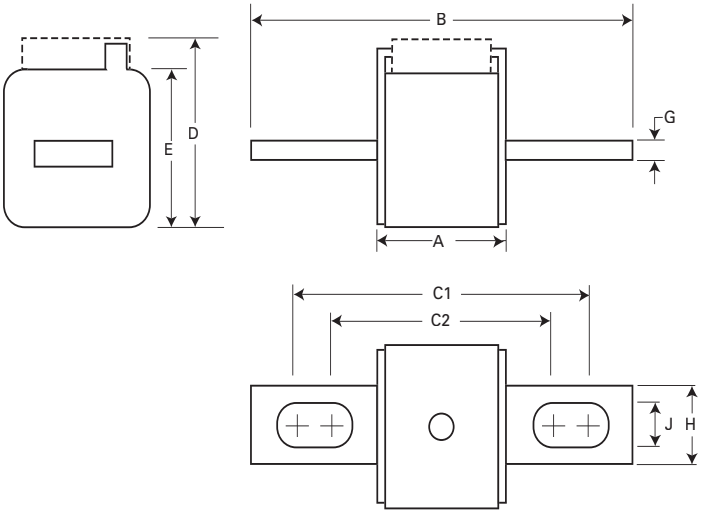

Type-FU/115,-FKE/115

Size	A	B	C1	C2	D	E	G	H	J
1*	74	156	130	101	59	45	6	20	10
1	76	160	127	102	69	53	6	25	14
2	76	160	127	102	77	61	6	25	14
3	76	159	128	101	92	76	6	36	16

For details on electrical characteristics, contact Application Engineering and ask for data sheets:170K6630 (Size 1*), 170K6632 (Size 1), 170K6634 (Size 2), 170K6636 (Size 3)

170M — Square Body size 1* to 3, US style

1250 Vac (IEC), 1300 Vac (UL), 50 to 1400 A

Fuse size	Rated voltage	Rated current (amps)	I²t (A²s) Pre-arcing	I²t (A²s) Clearing at 1000 Vac	I²t (A²s) Clearing at 1250 Vac	Watts loss (W)†	Catalog no. -FU/115 without indicator	Catalog no. -FKE/115 Type K indicator for microswitch
1*	1250 Vac (IEC) 1300 Vac (UL)	50	135	815	1100	15	170M3688††	170M3738††
		63	215	1300	1750	20	170M3689††	170M3739††
		80	420	2500	3350	25	170M3690††	170M3740††
		100	750	4450	5950	30	170M3691††	170M3741††
		125	1450	9000	11,500	35	170M3692††	170M3742††
		160	2600	16,000	21,000	40	170M3693††	170M3743††
		200	5150	31,000	41,000	45	170M3694††	170M3744††
		250	9200	54,500	73,000	55	170M3695††	170M3745††
		315	18,500	115,000	150,000	60	170M3696††	170M3746††
		350	27,000	165,000	220,000	65	170M3697††	170M3747††
1	1250 Vac (IEC) 1300 Vac (UL)	160	1900	11,500	15,500	45	170M4688	170M4738
		200	3800	22,500	30,000	50	170M4689	170M4739
		250	7750	46,000	61,500	60	170M4690	170M4740
		315	15,000	90,000	120,000	65	170M4691	170M4741
		350	20,000	125,000	165,000	70	170M4692	170M4742
		400	29,500	175,000	235,000	75	170M4693	170M4743
		450	42,000	250,000	335,000	80	170M4694	170M4744
	1100 Vac IEC	500	69,500	340,000	N/A	85	170M4695	170M4745
		550	95,000	465,000	N/A	95	170M4696	170M4746
	1000 Vac IEC	630	130,000	660,000	N/A	100	170M4697	170M4747
2	1250 Vac (IEC) 1300 Vac (UL)	250	6500	38,500	51,500	65	170M5688	170M5738
		280	9350	55,500	74,500	70	170M5689	170M5739
		315	13,000	77,500	105,000	75	170M5690	170M5740
		350	16,500	97,500	135,000	80	170M5691	170M5741
		400	23,000	140,000	180,000	85	170M5692	170M5742
		450	34,000	205,000	270,000	90	170M5693	170M5743
		500	48,000	285,000	380,000	95	170M5694	170M5744
		550	62,000	370,000	495,000	100	170M5695	170M5745
		630	115,000	575,000	730,000	120	170M5696	170M5746
	1100 Vac IEC	700	160,000	795,000	N/A	125	170M5697	170M5747
		800	245,000	1,200,000	N/A	130	170M5698	170M5748
	1000 Vac IEC	900	360,000	1,750,000	N/A	135	170M5699	170M5749
		1000	480,000	2,350,000	N/A	145	170M5700	170M5750
3	1250 Vac (IEC) 1300 Vac (UL)	315	9500	58,000	77,500	85	170M6688	170M6738
		350	13,500	81,500	110,000	90	170M6689	170M6739
		400	19,000	120,000	160,000	95	170M6690	170M6740
		450	31,000	185,000	245,000	100	170M6691	170M6741
		500	39,000	235,000	310,000	105	170M6692	170M6742
		550	55,000	325,000	435,000	110	170M6693	170M6743
		630	83,500	495,000	665,000	115	170M6694	170M6744
		700	115,000	705,000	940,000	120	170M6695	170M6745
	1250 Vac (IEC)	800	205,000	995,000	1,300,000	125	170M6696	170M6746
		900	305,000	1,500,000	1,900,000	130	170M6697	170M6747
	1100 Vac (IEC) 1000 Vac (UL)	1000	450,000	2,150,000	N/A	135	170M6698	170M6748
		1100	575,000	2,800,000	N/A	160	170M6699	170M6749
	1000 Vac (IEC/UL)	1250	810,000	3,950,000	N/A	170	170M6700	170M6750
		1400	1,250,000	6,000,000	N/A	175	170M6701	170M6751

† Watts loss at rated current.
††DC voltage rated at 900 Vdc, UL Recognized, File E125085.

For details on electrical characteristics, contact Application Engineering and ask for data sheets:170K6630 (Size 1*), 170K6632 (Size 1), 170K6634 (Size 2), 170K6636 (Size 3)

170M — Square Body size 00, flush-end contact

690 Vac, 25 to 400 A

Square body flush-end contact high speed fuses, for the protection of DC common bus, DC drives, power converters/rectifiers and reduced rated voltage starters. Catalog numbers available with visual indicator and Type T indicator for a microswitch.

Ratings

- Volts 690 Vac (IEC)
- Amps 25-400 A
- IR 200 kA RMS Sym.

Operating class

- gR (25-80 A)
- aR (100-400 A)

Agency information

- Designed and tested to IEC 60269 Part 4
- UL Recognized, JFHR2, E125085
- CSA Class 53787, File 1422-30 on size 000
- CE

Fuse size	Rated voltage	Rated current (amps)	I^2t (A^2s) Pre-arcing	I^2t (A^2s) Clearing at 660 Vac	Watts loss (W)†	Catalog no. 00B/60 visual indicator	Catalog no. 00BTN/60 Type T indicator for microswitch
00	690 Vac (IEC)	25	19.0	130	6	170M2708	170M2758
		32	28.5	195	7	170M2709	170M2759
		40	50.0	360	9	170M2710	170M2760
		50	95.0	640	10	170M2711	170M2761
		63	170.0	1200	12	170M2712	170M2762
		80	310.0	2100	15	170M2713	170M2763
		100	620.0	4150	20	170M2714	170M2764
		125	1000.0	6950	25	170M2715	170M2765
		160	1900.0	13,000	30	170M2716	170M2766
		200	3400.0	23,000	35	170M2717	170M2767
		250	6250.0	42,000	45	170M2718	170M2768
		315	10,000.0	68,500	55	170M2719	170M2769
		350	13,500.0	91,500	60	170M2720	170M2770
		400	18,000.0	125,000	70	170M2721	170M2771

† Watts loss at rated current.

Dimensions — mm

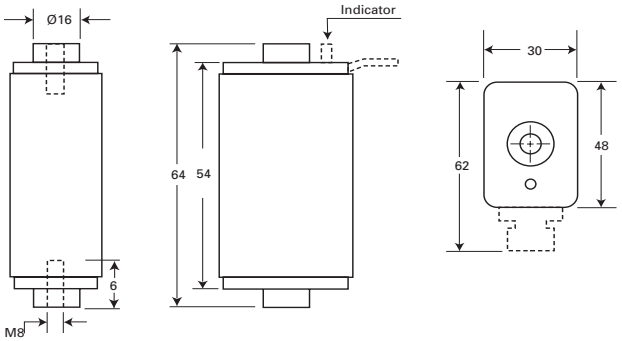

For details on electrical characteristics, contact Application Engineering and ask for Data sheet no. 170K6312

170M — Square Body size 1* to 3, flush-end contact

690 Vac (IEC), 700 Vac (UL), 40 to 2000 A

Square body flush-end contact high speed fuses, for the protection of DC common bus, DC drives, power converters/rectifiers and reduced rated voltage starters. Catalog numbers available with visual indicator and Type K indicator for a microswitch.

Ratings

- Volts
  - 500 to 700 Vac (see catalog number table)
  - 750 Vdc (UL, see catalog number table for specific fuses)
- Amps 40-2000 A
- IR 200 kA RMS Sym.

Operating class aR

Agency information

- Designed and tested to IEC 60269 Part 4
- UL Recognized, JFHR2, E125085†
- CSA Class 53787, File 1422-30†
- CCC†
- CE

† Consult your Bussmann series product representative for status.

Dimensions — mm

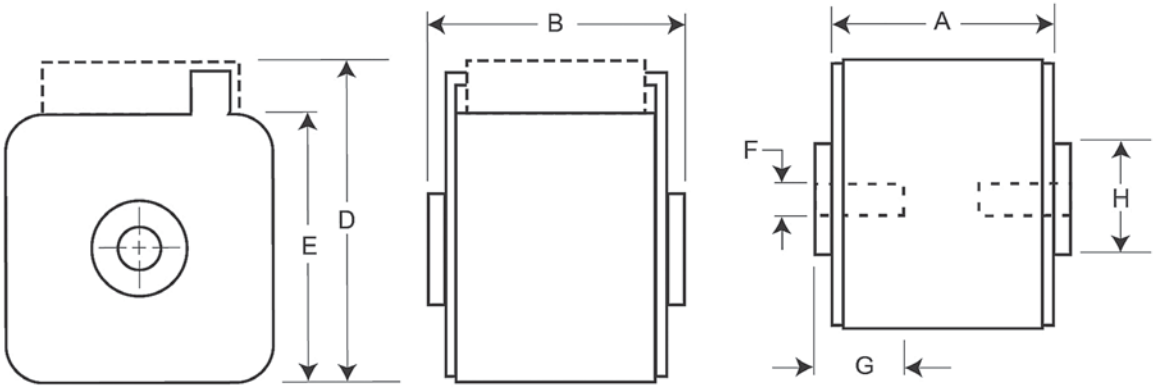

Type -B/- , -BKN/- , -G/- , -GKN/-

Size	A	B	D[1]	E	F	F[2] (in)	G	H
1*	50	51	59	45	M8	5/16-18 UNC-2B	5	N17
1	50	51	69	53	M8	5/16-18 UNC-2B	8	N20
2	50	51 (400-1000 A) 65 (1100-1250 A)	77	61	M10	3/8-16 UNC-2B	10	N24
3	51	53 (500-1500 A) 65 (1600-2000 A)	92	76	M12	1/2-13 UNC-2B	10	N30

1 Valid for fuse Types -BKN/ and -GKN/.
2 Valid for fuse Types -G- and -GKN/.

For details on electrical characteristics, contact Application Engineering and ask for data sheets:170K6314 (Size 1*), 170K6316 (Size 1), 170K6318 (Size 2), 170K6320 (Size 3)

170M — Square Body size 1* to 3, flush-end contact

690 Vac (IEC), 700 Vac (UL), 40 to 2000 A

Fuse size	Rated voltage	Rated current (amps)	I²t (A²s) Pre-arcing	I²t (A²s) Clearing at 660 Vac	Watts loss (W)†	Catalog no. -B/- visual indicator	Catalog no. -BKN/- Type K indicator for microswitch	Catalog no. -G/- visual indicator	Catalog no. -GKN/- Type K indicator for microswitch
1*	690 Vac (IEC) 700 Vac (UL)	40	40	270	9	170M3408	170M3458	170M3508	170M3558
		50	77	515	11	170M3409	170M3459	170M3509	170M3559
		63	115	770	14	170M3410	170M3460	170M3510	170M3560
		80	185	1250	18	170M3411	170M3461	170M3511	170M3561
		100	360	2450	21	170M3412	170M3462	170M3512	170M3562
		125	550	3700	26	170M3413	170M3463	170M3513	170M3563
		160	1100	7500	30	170M3414	170M3464	170M3514	170M3564
		200	2200	15,000	35	170M3415	170M3465	170M3515	170M3565
		250	4200	28,500	40	170M3416	170M3466	170M3516	170M3566
		315	7000	46,500	50	170M3417	170M3467	170M3517	170M3567
		350	10,000	68,500	55	170M3418	170M3468	170M3518	170M3568
		400	15,000	105,000	60	170M3419	170M3469	170M3519	170M3569
		450	21,000	140,000	65	170M3420	170M3470	170M3520	170M3570
		500	27,000	180,000	70	170M3421	170M3471	170M3521	170M3571
		550	34,000	230,000	75	170M3422	170M3472	170M3522	170M3572
		630	48,500	325,000	80	170M3423	170M3473	170M3523	170M3573
1	690 Vac (IEC) 700 Vac (UL)	200	1650	11,500	45	170M4408	170M4458	170M4508	170M4558
		250	3100	21,000	55	170M4409	170M4459	170M4509	170M4559
		315	6200	42,000	58	170M4410	170M4460	170M4510	170M4560
		350	8500	59,000	60	170M4411	170M4461	170M4511	170M4561
		400	13,500	91,500	65	170M4412	170M4462	170M4512	170M4562
		450	17,000	120,000	70	170M4413	170M4463	170M4513	170M4563
		500	25,000	170,000	72	170M4414	170M4464	170M4514	170M4564
		550	34,000	230,000	75	170M4415	170M4465	170M4515	170M4565
		630	52,000	350,000	80	170M4416	170M4466	170M4516	170M4566
		700	69,500	465,000	85	170M4417	170M4467	170M4517	170M4567
		800	105,000	725,000	95	170M4418	170M4468	170M4518	170M4568
	550 Vac (IEC)	900	155,000	850,000	100	170M4419	170M4469	170M4519	170M4569
2	690 Vac (IEC) 700 Vac (UL)	400	11,000	74,000	65	170M5408	170M5458	170M5508	170M5558
		450	15,500	105,000	70	170M5409	170M5459	170M5509	170M5559
		500	21,500	145,000	75	170M5410	170M5460	170M5510	170M5560
		550	28,000	190,000	80	170M5411	170M5461	170M5511	170M5561
		630	41,000	275,000	90	170M5412	170M5462	170M5512	170M5562
		700	60,500	405,000	95	170M5413	170M5463	170M5513	170M5563
		800	86,000	575,000	105	170M5414	170M5464	170M5514	170M5564
		900	125,000	840,000	110	170M5415	170M5465	170M5515	170M5565
		1000	180,000	1,250,000	115	170M5416	170M5466	170M5516	170M5566
	600 Vac (IEC) 700 Vac (UL)	1100	245,000	1,600,000	120	170M5417	170M5467	170M5517	170M5567
		1250	365,000	2,400,000	130	170M5418	170M5468	170M5518	170M5568
3	690 Vac (IEC) 700 Vac (UL)	500	14,000	95,000	95	170M6408	170M6458	170M6508	170M6558
		550	19,500	135,000	100	170M6409	170M6459	170M6509	170M6559
		630	31,000	210,000	105	170M6410	170M6460	170M6510	170M6560
		700	44,500	300,000	110	170M6411	170M6461	170M6511	170M6561
		800	69,500	465,000	115	170M6412	170M6462	170M6512	170M6562
		900	100,000	670,000	120	170M6413	170M6463	170M6513	170M6563
		1000	140,000	945,000	125	170M6414	170M6464	170M6514	170M6564
		1100	190,000	1,300,000	130	170M6415	170M6465	170M6515	170M6565
		1250	290,000	1,950,000	140	170M6416	170M6466	170M6516	170M6566
		1400	370,000	2,450,000	155	170M6417	170M6467	170M6517	170M6567
		1500	460,000	3,100,000	160	170M6418	170M6468	170M6518	170M6568
		1600	580,000	3,900,000	160	170M6419	170M6469	170M6519	170M6569
	600 Vac (IEC) 500 Vac (UL)	1800	880,000	5,250,000	165	170M6420††	170M6470	170M6520††	170M6570
	550 Vac (IEC) 500 Vac (UL)	2000	1,150,000	6,350,000	175	170M6421	170M6471	170M6521	170M6571

† Watts loss at rated current.
††DC voltage rated at 750 Vdc, UL Recognized, File E125085.

For details on electrical characteristics, contact Application Engineering and ask for data sheets:170K6314 (Size 1*), 170K6316 (Size 1), 170K6318 (Size 2), 170K6320 (Size 3)

170M — Square Body size 1* to 3, flush-end contact

1000 Vac (IEC and UL), 50 to 1400 A

Square body flush-end contact high speed fuses, for the protection of DC common bus, DC drives, power converters/rectifiers and reduced rated voltage starters. Catalog numbers come with Type K indicator for use with microswitches.

Ratings

- Volts
  - 1000 Vac (IEC, 50-1250 A)
  - 1000 Vac (UL, 250-1100 A)
  - 900 Vac (IEC, 1400 A
- Amps 50-1400 A
- IR 125 kA RMS Sym.

Operating class aR

Agency information

- Designed and tested to IEC 60269 Part 4
- UL Recognized, JFHR2, E125085 (only sizes 2 and 3 up to 1100 A)
- CE

Dimensions — mm

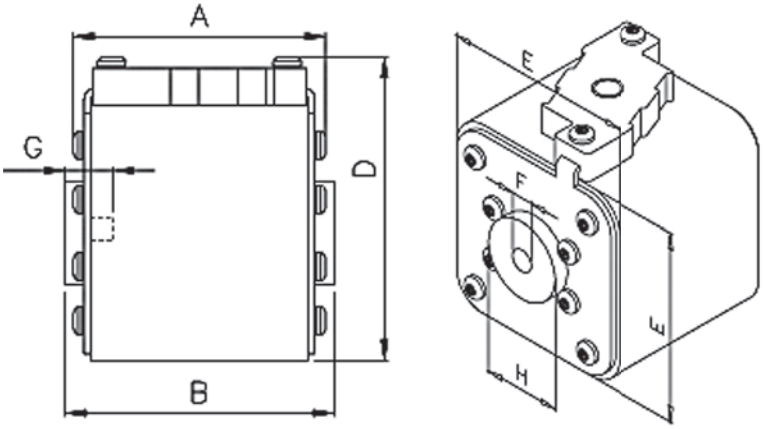

Type -BKN/- and -GKN/-

Size	Type	A	B	D (max)	E	F	F[1] (in)	G (min)	H
1*	BKN/75 + GKN/75	72.5	74.0	61	43	M8	5/16-18 UNC-2B	5	17.5
1	BKN/75 + GKN/75	73.2	74.0	69	52	M8	5/16-18 UNC-2B	8	20.0
2	BKN/75 + GKN/75	73.2	74.4	77	59	M10	3/8-16 UNC-2B	10	24.5
3	BKN/75 + GKN/75	73.3	75.4	92	74	M12	1/2-13 UNC-2B	10	30.0
	BKN/90 + GKN/90	80.3	91.4	92	74	M12	1/2-13 UNC-2B	10	30.0

1 Valid for fuse Types -GKN/-.

For details on electrical characteristics, contact Application Engineering and ask for data sheets: 170K8564 (Size 1*), 170K8566 (Size 1), 170K8568 (Size 2), 170K8570 (Size 3)

170M — Square Body size 1* to 3, flush-end contact

1000 Vac (IEC and UL), 50 to 1400 A

Fuse size	Rated voltage	Rated current (amps)	I^2t (A^2s) Pre-arcing	I^2t (A^2s) Clearing at rated voltage	Watts loss (W)†	Catalog no. -BKN/- Type K indicator for microswitch	Catalog no. -GKN/- Type K indicator for microswitch
1*	1000 Vac (IEC)	50	135	815	20	170M3951	170M3921
		63	215	1300	25	170M3952	170M3922
		80	460	2750	30	170M3953	170M3923
		100	860	5100	35	170M3954	170M3924
		125	1450	8600	40	170M3955	170M3925
		160	2850	17,500	45	170M3956	170M3926
		200	4950	29,500	50	170M3957	170M3927
		250	9550	57,000	55	170M3958	170M3928
		315	21,500	130,000	65	170M3959	170M3929
		350	29,000	175,000	70	170M3960	170M3930
		400	42,000	250,000	75	170M3961	170M3931
1	1000 Vac IEC)	160	2200	13,500	40	170M4951	170M4921
		200	4150	24,500	45	170M4952	170M4922
		250	7750	46,000	52	170M4953	170M4923
		315	16,500	98,500	60	170M4954	170M4924
		350	21,500	130,000	65	170M4955	170M4925
		400	31,000	185,000	70	170M4956	170M4926
		450	44,500	265,000	80	170M4957	170M4927
		500	63,000	375,000	85	170M4958	170M4928
		550	84,500	500,000	90	170M4959	170M4929
		630	125,000	755,000	98	170M4960	170M4930
2	1000 Vac (IEC/UL)	250	6750	40,000	65	170M5952	170M5922
		315	13,500	81,500	75	170M5953	170M5923
		350	16,500	99,000	80	170M5954	170M5924
		400	26,000	155,000	85	170M5955	170M5925
		450	35,500	210,000	90	170M5956	170M5926
		500	49,500	295,000	95	170M5957	170M5927
		550	66,000	390,000	100	170M5958	170M5928
		630	93,500	555,000	110	170M5959	170M5929
		700	130,000	770,000	115	170M5960	170M5930
		800	195,000	1,200,000	125	170M5961	170M5931
3	1000 Vac (IEC/UL)	315	9200	54,500	90	170M8600	170M8500
		350	13,000	77,500	95	170M8601	170M8501
		400	19,000	115,000	105	170M8602	170M8502
		450	27,000	160,000	107	170M8603	170M8503
		500	37,500	225,000	110	170M8604	170M8504
		550	52,000	310,000	115	170M8605	170M8505
		630	82,500	490,000	120	170M8606	170M8506
		700	115,000	700,000	125	170M8607	170M8507
		800	170,000	1,050,000	135	170M8608	170M8508
		900	250,000	1,500,000	145	170M8609	170M8509
		1000	340,000	2,050,000	150	170M8610	170M8510
		1100	460,000	2,750,000	155	170M8611	170M8511
	1000 Vac (IEC)	1250	575,000	3,400,000	175	170M8612[1]	170M8512[1]
	900 Vac (IEC)	1400	795,000	4,200,000	185	170M8613[1]	170M8513[1]

† Watts loss at rated current.
1 Overall length is 90mm, for all other fuses the overall length is 75mm.

For details on electrical characteristics, contact Application Engineering and ask for data sheets:170K8564 (Size 1*), 170K8566 (Size 1), 170K8568 (Size 2), 170K8570 (Size 3)

170M — Square Body size 1* to 3, flush-end contact

1250 Vac (IEC), 1300 Vac (UL), 50 to 1400 A

Square body flush-end contact high speed fuses, for the protection of DC common bus, DC drives, power converters/rectifiers and reduced rated voltage starters. Catalog numbers come with Type K indicator for use with microswitches.

Ratings

- Volts
  - 1250 Vac (IEC)
  - 1300 Vac (UL)
  - 900 and 1000 Vdc (UL, see catalog number table for specific fuses)
- Amps 50-1400 A
- IR 100 kA RMS Sym.

Operating class aR

Agency information

- Designed and tested to IEC 60269 Part 4
- UL Recognized, JFHR2, E125085†
- CSA Class 53787, File 1422-30†
- CE

† Consult your Bussmann series product representative status.

Dimensions — mm

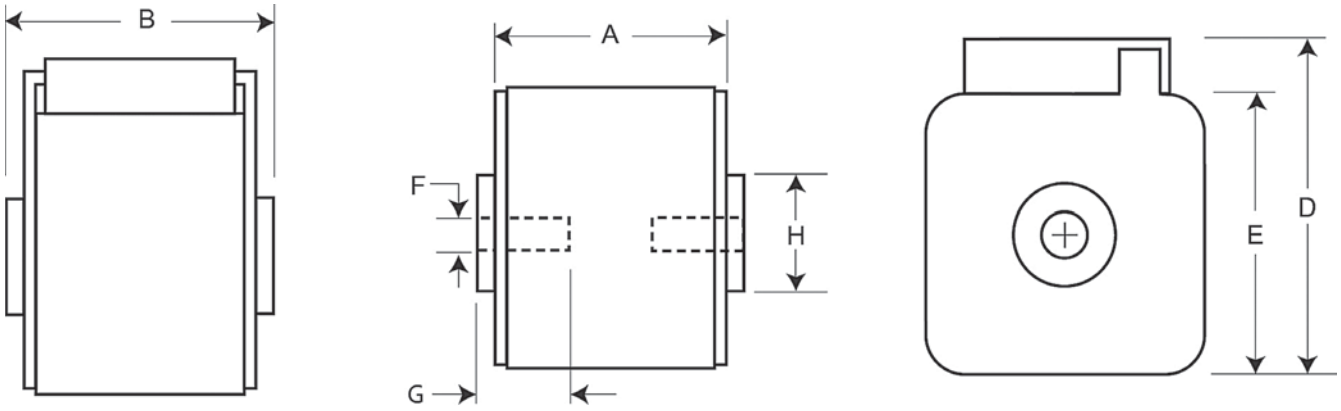

Type -BKN/- and -GKN/-

Size	Type	A	B	D	E	F	F[1] (in)	Min G	HØ
1*	BKN + GKN/75	74	75	59	45	M8	5/16-18 UNC-2B	5	17
	BKN/80	80	81	59	45	M8		5	17
1	BKN + GKN/75	74	75	69	53	M8		8	20
	BKN/80	80	81	69	53	M8		8	20
2	BKN + GKN/75	74	75	77	61	M10	3/8-16 UNC-2B	10	24
	BKN/80	80	81	77	61	M10		10	24
	BKN + GKN/90	80	91	77	61	M10		10	24
3	BKN + GKN/75	74	76	92	76	M12	1/2-13 UNC-2B	10	30
	BKN/80	81	83	92	76	M12		10	30
	BKN + GKN/90	81	91	92	76	M12		10	30

1 Valid for fuse Types -GKN/-.

For details on electrical characteristics, contact Application Engineering and ask for data sheets: 170K6630 (Size 1*), 170K6632 (Size 1), 170K6634 (Size 2), 170K6636 (Size 3)

170M — Square Body size 1* to 3, flush-end contact

1250 Vac (IEC), 1300 Vac (UL), 50 to 1400 A

Fuse size	Rated voltage	Rated current (amps)	I²t (A²s) Pre-arcing	I²t (A²s) Clearing at 1000 Vac	I²t (A²s) Clearing at 1250 Vac	Watts loss (W)†	Catalog no. -BKN/75 Type K indicator for micro	Catalog no. -BKN/80 Type K indicator for micro	Catalog no. -BKN/90 Type K indicator for micro	Catalog no. -GKN/75 Type K indicator for micro	Catalog no. -GKN/90 Type K indicator for micro
1*	1250 Vac (IEC) 1300 Vac (UL)	50	135	815	1100	15	170M3388††	170M3438	—	170M3488††	—
		63	215	1300	1750	20	170M3389††	170M3439	—	170M3489††	—
		80	420	2500	3350	25	170M3390††	170M3440	—	170M3490††	—
		100	750	4450	5950	30	170M3391††	170M3441	—	170M3491††	—
		125	1450	9000	11,500	35	170M3392††	170M3442	—	170M3492††	—
		160	2600	16,000	21,000	40	170M3393††	170M3443	—	170M3493††	—
		200	5150	31,000	41,000	45	170M3394††	170M3444	—	170M3494††	—
		250	9200	54,500	73,000	55	170M3395††	170M3445	—	170M3495††	—
		315	18,500	115,000	150,000	60	170M3396††	170M3446	—	170M3496††	—
		350	27,000	165,000	220,000	65	170M3397††	170M3447	—	170M3497††	—
		400	53,000	265,000	335,000	70	—	170M3448	—	—	—
1	1250 Vac (IEC) 1300 Vac (UL)	160	1900	11,500	15,500	45	170M4388††	170M4438††	—	170M4488	—
		200	3800	22,500	30,000	50	170M4389††	170M4439††	—	170M4489	—
		250	7750	46,000	61,500	60	170M4390††	170M4440††	—	170M4490	—
		315	15,000	90,000	120,000	65	170M4391††	170M4441††	—	170M4491	—
		350	20,000	125,000	165,000	70	170M4392††	170M4442††	—	170M4492	—
		400	29,500	175,000	235,000	75	170M4393††	170M4443††	—	170M4493	—
		450	42,000	250,000	335,000	80	170M4394††	170M4444††	—	170M4494	—
		500	69,500	340,000	435,000	85	170M4395[4]	170M4445	—	170M4495[4]	—
		550	95,000	465,000	590,000	95	170M4396[5]	170M4446	—	170M4496[5]	—
		630	130,000	660,000	N/A	110	170M4397[5]	170M4447[4]	—	170M4497[5]	—
2	1250 Vac (IEC) 1300 Vac (UL)	250	6500	38,500	51,500	65	170M5388	170M5438	—	170M5588	—
		280	9350	55,500	74,500	70	170M5389	170M5439	—	170M5589	—
		315	13,000	77,500	105,000	75	170M5390	170M5440	—	170M5590	—
		350	16,500	97,500	135,000	80	170M5391	170M5441	—	170M5591	—
		400	23,000	140,000	180,000	85	170M5392	170M5442	—	170M5592	—
		450	34,000	205,000	270,000	90	170M5393	170M5443	—	170M5593	—
		500	48,000	285,000	380,000	95	170M5394	170M5444	170M5494	170M5594	170M5644
		550	62,000	370,000	495,000	100	170M5395	170M5445	170M5495	170M5595	170M5645
		630	115,000	575,000	730,000	120	170M5396[4]	170M5446	170M5496	170M5596[4]	170M5646
		700	160,000	795,000	1,050,000	125	170M5397[5]	170M5447[1]†††	170M5497	170M5597[5]	170M5647
		800	245,000	1,200,000	1,550,000	130	170M5398[5]	170M5448[2]†††	170M5498	170M5598[5]	170M5648
		900	360,000	1,750,000	N/A	135	—	—	170M5499[3]††	—	170M5649[3]††
		1000	480,000	2,350,000	N/A	145	—	—	170M5500[3]††	—	170M5650[3]††
3	1250 Vac (IEC) 1300 Vac (UL)	315	9500	58,000	77,500	85	170M6338††	170M6538††	—	170M6588	—
		350	13,500	81,500	110,000	90	170M6339††	170M6539††	—	170M6589	—
		400	19,500	120,000	160,000	95	170M6340††	170M6540††	—	170M6590	—
		450	31,000	185,000	245,000	100	170M6341††	170M6541††	—	170M6591	—
		500	39,000	235,000	310,000	105	170M6342††	170M6542††	—	170M6592	—
		550	55,000	325,000	435,000	110	170M6343††	170M6543††	—	170M6593	—
		630	83,500	495,000	665,000	115	170M6344††	170M6544††	170M6494††	170M6594	170M6644
		700	115,000	705,000	940,000	120	170M6345	170M6545††	170M6495††	170M6595	170M6645††
		800	205,000	995,000	1,300,000	125	170M6346[4]	170M6546††	170M6496†††	170M6596[4]	170M6646†††
		900	305,000	1,500,000	1,900,000	130	170M6347[5]	170M6547[1]††	170M6497†††	170M6597[5]	170M6647†††
		1000	450,000	2,150,000	2,750,000	135	170M6348[5]	170M6548[1]††	170M6498†††	170M6598[5]	170M6648†††
		1100	575,000	2,800,000	3,600,000	160	170M6349[5]	170M6549[2]††	170M6499†††	170M6599[5]	170M6649†††
		1250	810,000	3,950,000	N/A	170	—	—	170M6500[3]††	—	170M6650[4]
		1400	1,250,000	6,000,000	N/A	175	—	—	170M6501[3]††	—	170M6651[4]

† Watts loss at rated current.
†† DC voltage rated at 900 Vdc, UL Recognized, File E125085.
††† DC voltage rated at 1000 Vdc, UL Recognized, File E125085.
1 Rated voltage 1100 Vac (IEC), 1000 Vac (UL).
2 Rated voltage 1000 Vac (IEC and UL).
3 Rated voltage 1100 Vac (IEC and UL).
4 Rated voltage (IEC) 1100 Vac.
5 Rated voltage (IEC) 1000 Vac.

For details on electrical characteristics, contact Application Engineering and ask for data sheets:170K6630 (Size 1*), 170K6632 (Size 1), 170K6634 (Size 2), 170K6636 (Size 3)

170M — Square Body size 4, flush-end contact

690 Vac (IEC), 700 Vac (UL), 1000 to 4000 A

Square body, flush-end contact, high speed fuses, for the protection of power rectifiers. Catalog numbers come with visual indicator or Type K indicator for use with microswitches.

Ratings

- Volts
  - 690 Vac (IEC)/700 Vac (UL) 1000-3500 A
  - 600 Vac (IEC and UL, 4000 A)
- Amps 1000-4000 A
- IR 200 kA RMS Sym.

Operating class aR

Agency information

- Designed and tested to IEC 60269 Part 4
- UL Recognized, JFHR2, E125085
- CE

Fuse size	Rated voltage	Rated current (amps)	I^2t (A^2s) Pre-arcing	I^2t (A^2s) Clearing at 660 Vac	Watts loss (W)†	Catalog no. -B/65 visual indicator	Catalog no. -BKN/65 Type K indicator	Catalog no. -G/65 visual indicator	Catalog no. -GKN/65 Type K indicator
4	690 Vac (IEC) 700 Vac (UL)	1000	76,000	505,000	175	170M7058	170M7078	170M7098	170M7118
		1250	145,000	965,000	195	170M7059	170M7079	170M7099	170M7119
		1400	205,000	1,400,000	205	170M7060	170M7080	170M7100	170M7120
		1600	305,000	2,050,000	220	170M7061	170M7081	170M7101	170M7121
		2000	600,000	3,950,000	245	170M7062	170M7082	170M7102	170M7122
		2500	1,200,000	7,800,000	275	170M7063	170M7083	170M7103	170M7123
		3000	2,000,000	13,500,000	305	170M7064	170M7084	170M7104	170M7124
		3500	3,250,000	22,000,000	325	170M7065	170M7085	170M7105	170M7125
	600 Vac (IEC/UL)	4000	4,700,000	28,000,000[1]	355	170M7066	170M7086	170M7106	170M7126

† Watts loss at rated current.
1 Clearing at 600 Vac.

For details on electrical characteristics, contact Application Engineering and ask for Data sheet no. 170K6328

170M — Square Body size 4, flush-end contact

690 Vac (IEC), 700 Vac (UL), 1000 to 4000 A

Dimensions — mm

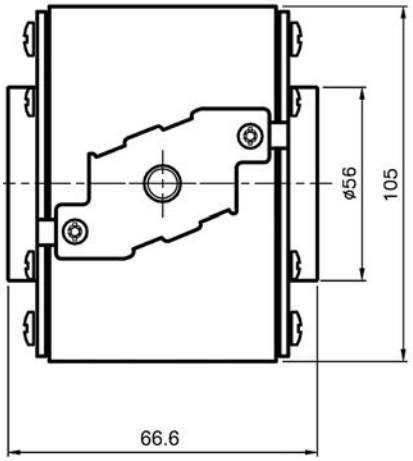

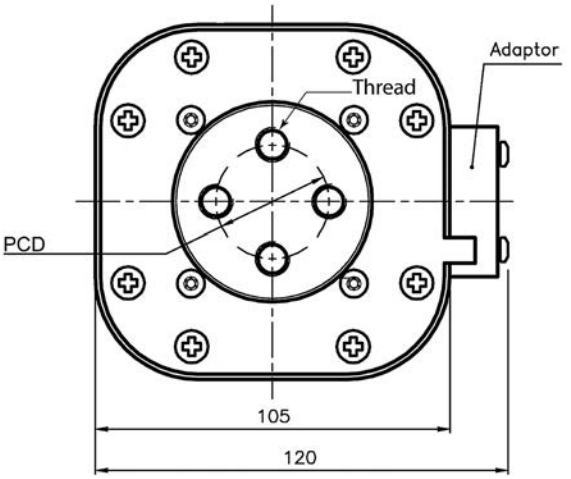

Type -BKN/65, -GKN/65

Type	PCD	Thread
-GKN/65	Ø 38.1	1/2-13 UNC
-BKN/65	Ø 33.0	M-10

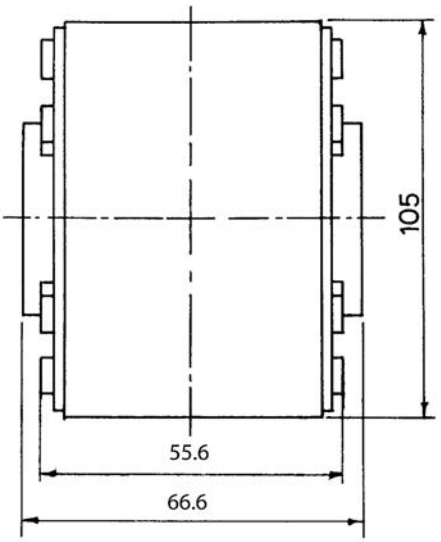

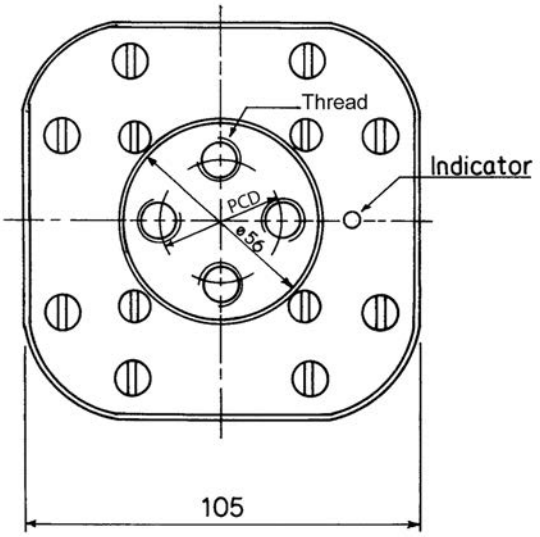

Type -B/65, -G/65

Type	PCDØ	Thread
-G/65	38.1	1/2-13 UNC
-B/65	33.0	M-10

For details on electrical characteristics, contact Application Engineering and ask for Data sheet no.170K6328

170M — Square Body size 4, flush-end contact

1000 Vac (IEC), 1000 to 3000 A

Square body, flush-end contact, high speed fuses, for the protection of power rectifiers. Catalog numbers come with visual indicator or Type K indicator for use with microswitches.

Ratings

- Volts 1000 Vac (IEC)
- Amps 1000-3000 A
- IR 200 kA RMS Sym.

Operating class aR

Agency information

- Designed and tested to IEC 60269 Part 4
- UL Recognized, JFHR2, E125085
- CE

Fuse size	Rated voltage	Rated current (amps)	I²t (A²s) Pre-arcing	I²t (A²s) Clearing at 1000 Vac	Watts loss (W)†	Catalog no. -BKN/95 Type K indicator	Catalog no. -SBKN/90 Type K indicator
4	1000 Vac	1000	180,000	1,100,000	195	—	170M7542
		1100	250,000	1,500,000	200	—	170M7031
		1500	600,000	3,600,000	250	170M7636	170M7548
		1700	850,000	5,000,000	260	170M7639	170M7034
		1800	1,000,000	5,950,000	265	170M7661	170M7053
		2000	1,450,000	8,600,000	270	170M7963	170M7544
		2200	2,000,000	12,000,000	280	170M7090	170M7035
		2500	3,000,000	18,000,000	295	170M7640	170M7036
		2700	3,700,000	22,000,000	310	170M7658	170M7037
		3000	4,700,000	28,000,000	380	170M7962	170M7156

† Watts loss at rated current.

Dimensions — mm

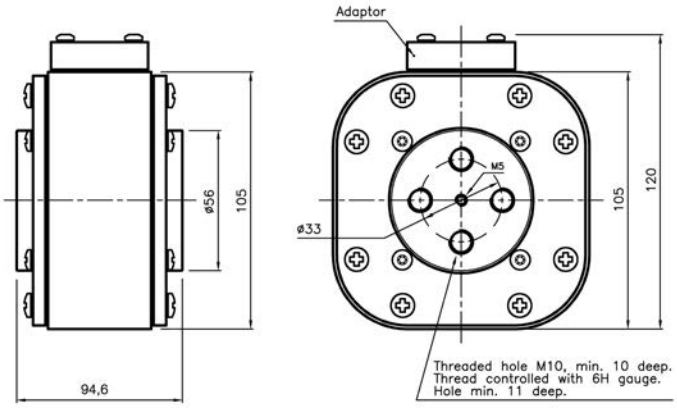

Type 4BKN/95

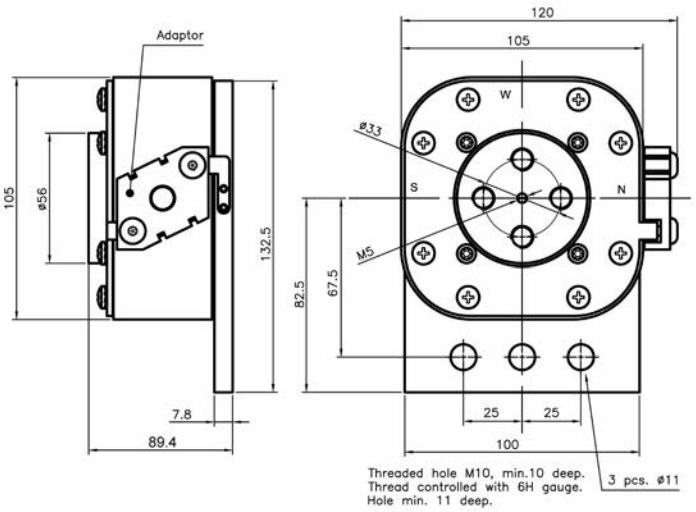

Type 4SBKN/90

For details on electrical characteristics, contact Application Engineering and ask for data sheets:170K8520, 170K8520-R

170M — Square Body size 4, flush-end contact

1250 Vac (IEC), 800 to 2500 A

Square body, flush-end contact, high speed fuses, for the protection of power rectifiers. Catalog numbers come with visual indicator or Type K indicator for use with microswitches.

Ratings

- Volts
  - 1250 Vac (IEC)
  - 1200 Vdc (UL)
- Amps 800-2500 A
- IR
  - 200 kA RMS Sym.
  - 85 kA DC (L/R 2 ms)

Operating class aR

Agency information

- Designed and tested to IEC 60269 Part 4
- UL Recognized, JFHR2, E125085
- cURus JFHR2, E125085
- CE

Fuse size	Rated voltage	Rated current (amps)	I²t (A²s) Pre-arcing	I²t (A²s) Clearing at 1250 Vac	Watts loss (W)†	Catalog no. -BKN/105 Type K indicator	Catalog no. -SBKN/105 Type K indicator
4	1250 Vac (IEC) 1200 Vdc (UL)	800	145,000	905,000	195	170M7802	—
		1000	275,000	1,750,000	220	170M7803	—
		1200	495,000	3,100,000	240	170M7804	—
		1400	800,000	5,000,000	250	170M7217	170M7512
		1500	1,000,000	6,200,000	260	170M7597	170M7510
		1700	1,400,000	8,700,000	275	170M7676	170M7511
		1800	1,700,000	11,000,000	280	170M7532	170M7976
		2000	2,300,000	14,500,000	305	170M7633	170M7513
		2200	3,100,000	19,500,000	315	170M7592	170M7546
		2400	4,000,000	25,000,000	330	170M7107	170M7516
		2500	4,500,000	28,000,000	340	170M7595	170M7978

† Watts loss at rated current.

Dimensions — mm

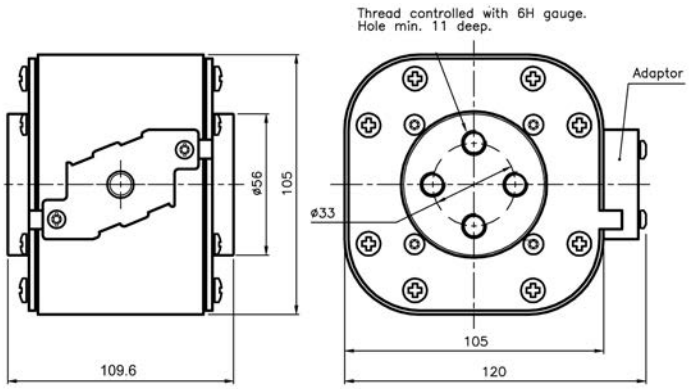

Type 4BKN/105

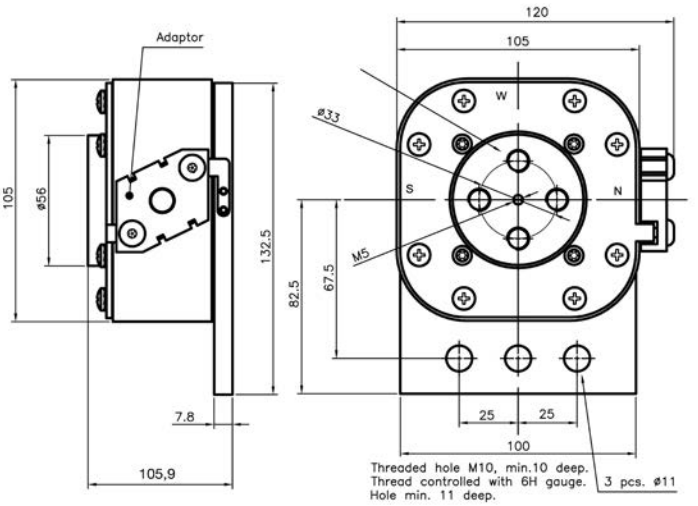

Type 4SBKN/105

For details on electrical characteristics, contact Application Engineering and ask for data sheets:170K6640 (1400-2400 A), 170K6642 (800-1200, 2500 A)

170M — Square Body size 23, flush-end contact

660 Vac (IEC), 1000 to 4000 A

Square body, flush-end contact, high speed fuses, for the protection of power rectifiers. Catalog numbers available with Type K indicator for use with microswitches.

Ratings

- Volts
  - 660 Vac (IEC, 1000-3000 A)
  - 600 Vac (IEC, 3500 A)
  - 550 Vac (IEC, 4000 A)
- Amps 1000-4000 A
- IR 100 kA RMS Sym.

Operating class aR

Agency information

- Designed and tested to IEC 60269 Part 4
- UL Recognized, JFHR2, E125085
- CE

Fuse size	Rated voltage	Rated current (amps)	I²t (A²s) Pre-arcing	I²t (A²s) Clearing at 660 Vac	Watts loss (W)†	Catalog no. -BU/55	Catalog no. -BKE/55 Type K indicator	Catalog no. -BKN/55 Type K indicator	Catalog no. -GU/55	Catalog no. -GKE/55 Type K indicator	Catalog no. -GKN/55 Type K indicator
23	660 Vac (IEC)	1000	79,000	530,000	170	170M6858	170M6898	170M6878	170M6918	170M6958	170M6938
		1100	95,000	635,000	185	170M6859	170M6899	170M6879	170M6919	170M6959	170M6939
		1250	155,000	1,050,000	190	170M6860	170M6900	170M6880	170M6920	170M6960	170M6940
		1400	200,000	1,350,000	210	170M6861	170M6901	170M6881	170M6921	170M6961	170M6941
		1500	240,000	1,650,000	215	170M6862	170M6902	170M6882	170M6922	170M6962	170M6942
		1600	315,000	2,150,000	220	170M6863	170M6903	170M6883	170M6923	170M6963	170M6943
		1800	450,000	3,050,000	230	170M6864	170M6904	170M6884	170M6924	170M6964	170M6944
		2000	625,000	4,200,000	240	170M6865	170M6905	170M6885	170M6925	170M6965	170M6945
		2200	805,000	5,400,000	255	170M6866	170M6906	170M6886	170M6926	170M6966	170M6946
		2500	1,250,000	8,350,000	265	170M6867	170M6907	170M6887	170M6927	170M6967	170M6947
		3000	2,250,000	15,500,000	285	170M6868	170M6908	170M6888	170M6928	170M6968	170M6948
	600 Vac (IEC)	3500	3,450,000	21,000,000[1]	315	170M6869	170M6909	170M6889	170M6929	170M6969	170M6949
	550 Vac (IEC)	4000	5,000,000	27,500,000[2]	340	170M6870	170M6910	170M6890	170M6930	170M6970	170M6950

† Watts loss at rated current.
1 Clearing at 600 Vac.
2 Clearing at 550 Vac.

When using these fuses, please consult our application engineers.

For details on electrical characteristics, contact Application Engineering and ask for Data sheet no. 170K6326

170M — Square Body size 23, flush-end contact

660 Vac (IEC), 1000 to 4000 A

Dimensions — mm

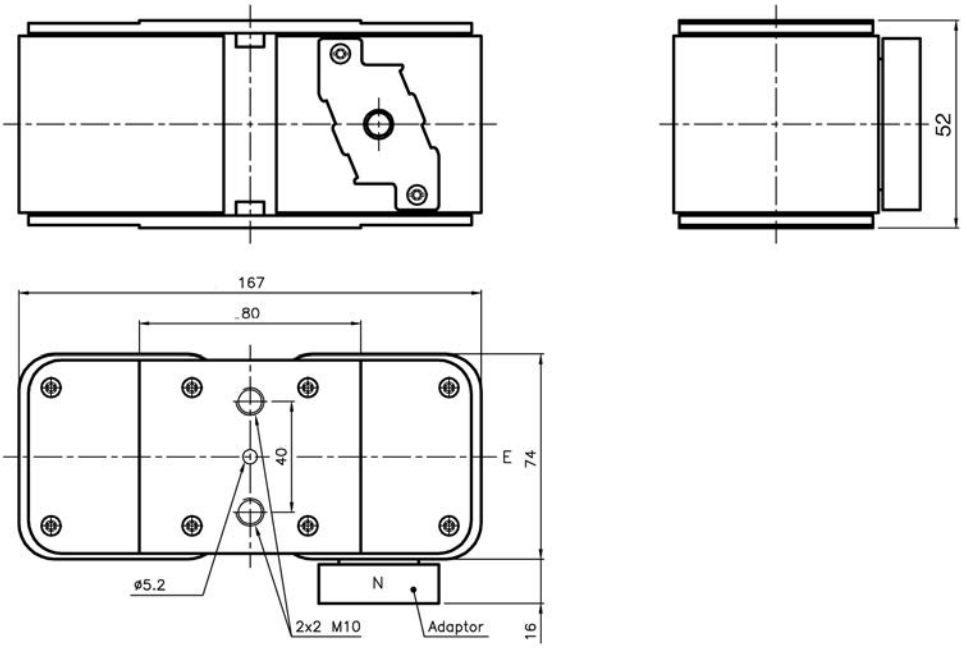

Type -BU/55, -BKE/55, -BKN/55

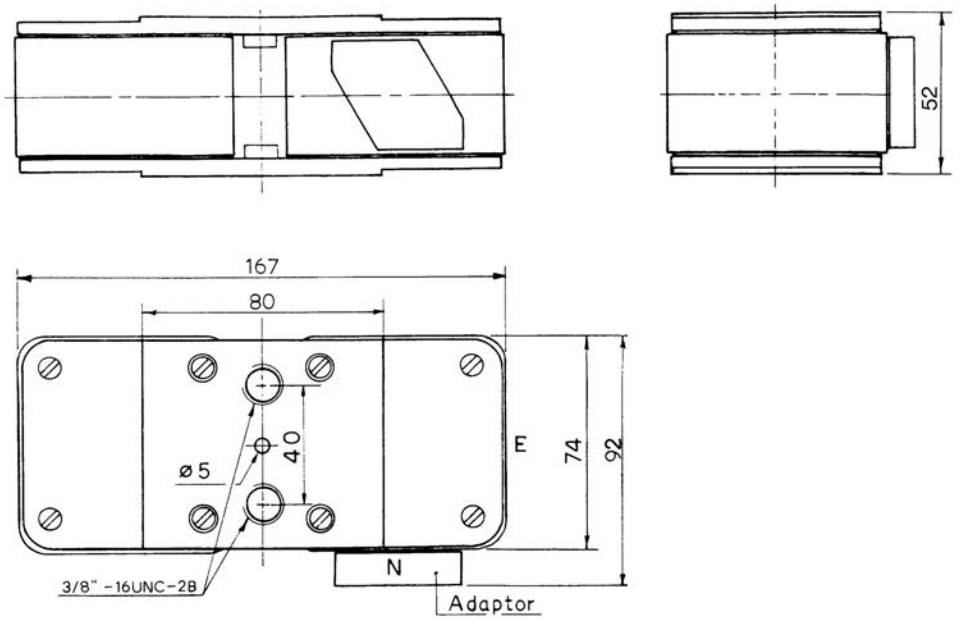

Type -GU/55, -GKE/55, -GKN/55

When using these fuses, please consult our application engineers.

For details on electrical characteristics, contact Application Engineering and ask for Data sheet no.170K6326

170M — Square Body size 23, flush-end contact

1250 Vac (IEC), 630 to 2800 A

Square body, flush-end contact, high speed fuses, for the protection of power rectifiers. Catalog numbers available with visual indicator or Type K indicator for use with microswitches.

Ratings

- Volts
  - 1250 Vac (IEC 630 to 2200 A)
  - 1100 Vac (IEC 2500 and 2800 A)
  - 900 Vdc (UL, see catalog number table for specific fuses)
- Amps 630-2800 A
- IR 125 kA RMS Sym.

Operating class aR

Agency information

- Designed and tested to IEC 60269 Part 4
- UL Recognized
- CE

Fuse size	Rated voltage	Rated current (amps)	I²t (A²s) Pre-arcing	I²t (A²s) Clearing at 1250 Vac	Watts loss (W)†	Catalog no. -BU/75 visual indicator	Catalog no. -BKE/75 Type K indicator	Catalog no. -BKN/75 Type K indicator	Catalog no. -BU/80 visual indicator	Catalog no. -BKE/80 Type K indicator	Catalog no. -BKN/80 Type K indicator
23	1250 Vac (IEC)	630	38,000	310,000	170	170M6775	170M6795	170M6785	—	—	—
		700	54,000	440,000	180	170M6776	170M6796	170M6786	—	—	—
		800	78,000	640,000	190	170M6777	170M6797	170M6787	—	—	—
		900	120,000	980,000	200	170M6805	170M6807	170M6806	—	—	—
		1000	155,000	1,250,000	210	170M6778	170M6798	170M6788	—	—	—
		1100	220,000	1,750,000	220	170M6779	170M6799	170M6789	—	—	—
		1250	330,000	2,700,000	230	170M6780	170M6800	170M6790	—	—	—
		1400	460,000	3,800,000	240	170M6781	170M6801	170M6791	—	—	—
		1600	820,000	5,200,000	250	170M6782	170M6802	170M6792	—	—	—
		1800	1,200,000	7,600,000	260	170M6783††	170M6803††	170M6793††	—	—	—
		2000	1,800,000	11,000,000	270	—	—	—	170M6784	170M6804	170M6794
		2200	2,300,000	14,500,000	280	—	—	—	170M6815	170M6833	170M6827
	1100 Vac (IEC)	2500	3,200,000	16,000,000[1]	290	—	—	—	170M6816	170M6834	170M6828
		2800	5,000,000	24,000,000[1]	300	—	—	—	170M6817	170M6835	170M6829

† Watts loss at rated current.
††DC voltage rated at 900 Vdc, UL Recognized, File E125085.
1 Clearing at 1000 V.

When using these fuses, please consult our application engineers.

Dimensions — mm

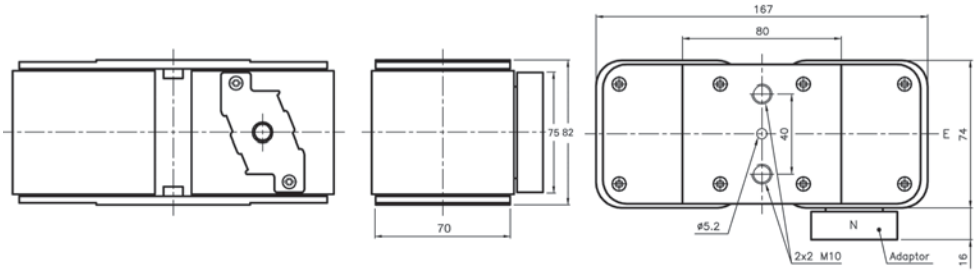

For details on electrical characteristics, contact Application Engineering and ask for Data sheet no.170K6638

170M — Square Body size 24, flush-end contact

690 Vac (IEC), 2000 to 7500 A

Square body, flush-end contact, high speed fuses, for the protection of power rectifiers. Catalog numbers available with Type K indicator for use with microswitches.

Ratings

- Volts
  - 690 Vac (IEC 2000 to 7000 A)
  - 500 Vac (IEC 7500 A)
- Amps 2000-7500 A
- IR 200 kA RMS Sym.

Operating class aR

Agency information

- Designed and tested to IEC 60269 Part 4
- UL Recognized, JFHR2, E125085
- CE

Fuse size	Rated voltage	Rated current (amps)	I^2t (A^2s) Pre-arcing	I^2t (A^2s) Clearing at 660 Vac	Watts loss (W)†	Catalog no. -BU/60 without indicator	Catalog no. -BKN/60 Type K indicator	Catalog no. -GU/60 without indicator	Catalog no. -GKN/60 Type K indicator
24	690 Vac (IEC)	2000	340,000	2,300,000	340	170M7138	170M7158	170M7198	170M7218
		2500	650,000	4,350,000	390	170M7139	170M7159	170M7199	170M7219
		3000	1,100,000	7,300,000	430	170M7140	170M7160	170M7200	170M7220
		3500	1,800,000	12,000,000	460	170M7141	170M7161	170M7201	170M7221
		4000	2,700,000	18,000,000	490	170M7142	170M7162	170M7202	170M7222
		4500	3,800,000	25,500,000	520	170M7143	170M7163	170M7203	170M7223
		5000	5,450,000	36,500,000	540	170M7144	170M7164	170M7204	170M7224
		5500	7,400,000	49,500,000	560	170M7145	170M7165	170M7205	170M7225
		6000	9,600,000	64,000,000	580	170M7146	170M7166	170M7206	170M7226
		6500	12,500,000	83,000,000	600	170M7147	170M7167	170M7207	170M7227
		7000	15,000,000	100,000,000	630	170M7148	170M7168	170M7208	170M7228
	500 Vac (IEC)	7500	18,500,000	93,000,000[1]	660	170M7149	170M7169	170M7209	170M7229

† Watts loss at rated current.
1 Clearing at 500 Vac.

When using these fuses, please consult our application engineers.

Dimensions — mm

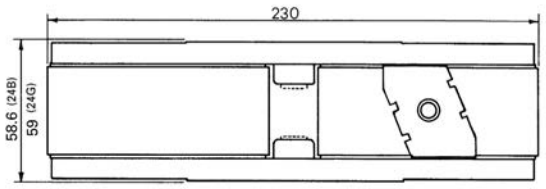

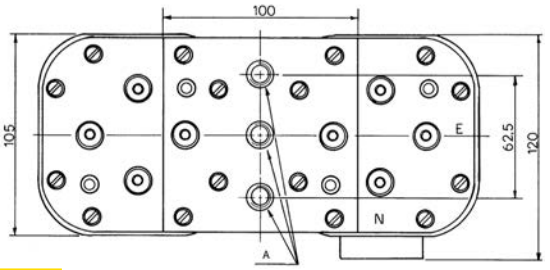

Size	Type	A
24	BKN	2x3 M12
	GKN	2x3 1/2-13 UNC-2B

For details on electrical characteristics, contact Application Engineering and ask for Data sheet no.170K6332

170M — Square Body size 24, flush-end contact

1000 Vac (IEC), 2000 to 5000 A

Square body, flush-end contact, high speed fuses, for the protection of power rectifiers. Catalog numbers come with Type K indicator for use with microswitches.

Ratings

- Volts 1000 Vac (IEC)
- Amps 2000-5000 A
- IR 166 kA RMS Sym.

Operating class aR

Agency information

- Designed and tested to IEC 60269 Part 4
- UL Recognized, JFHR2, E125085
- CE

Fuse size	Rated voltage	Rated current (amps)	I²t (A²s) Pre-arcing	I²t (A²s) Clearing at 1000 Vac	Watts loss (W)†	Catalog no. -BKN/85 Type K indicator
24	1000 Vac (IEC)	2000	900,000	5,350,000	345	170M7608
		3000	2,950,000	17,500,000	430	170M7680
		3200	3,300,000	20,000,000	440	170M7567
		3500	4,500,000	27,000,000	450	170M7568
		4000	6,800,000	40,000,000	475	170M7569
		4200	8,000,000	47,500,000	485	170M7498
		4500	10,000,000	59,000,000	495	170M7488
		5000	14,000,000	82,500,000	540	170M7622

† Watts loss at rated current.

When using these fuses, please consult our application engineers.

Dimensions — mm

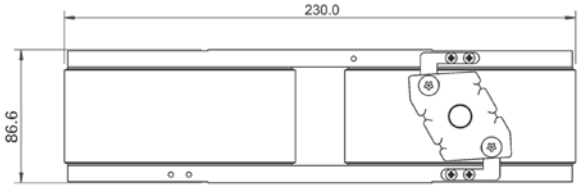

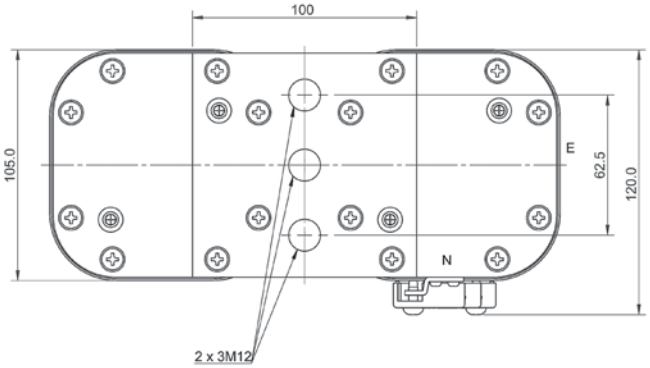

The normal position of the indicator is as shown position "N", position "E" on request only.

For details on electrical characteristics, contact Application Engineering and ask for Data sheet no.170K8514

Square Body fuse accessories

Fixed center fuse blocks for DIN 43653 fuses

Fuse blocks for use with DIN 43653 square body fuses with center distances of 80 and 110mm. Available for sizes 000, 00, 1*, 1, 2 and 3.

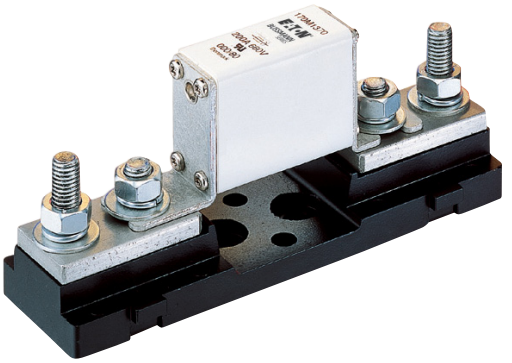

Sizes 000 to 00

Catalog no.	Max rated voltage	Max fuse amp rating	Center distance (mm)	Fuse sizes
170H1007	1000	400	80	00, 000
170H1013	690	200	80	0000, 000

Dimensions — mm

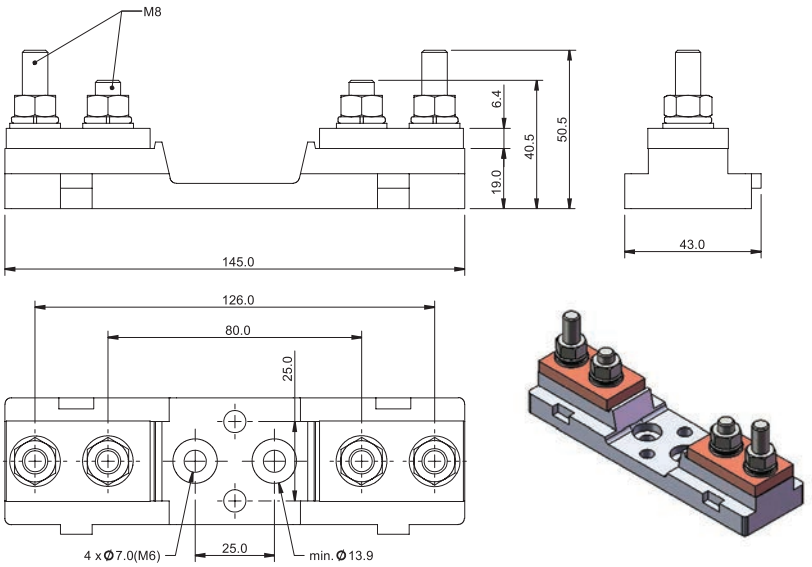

170H1007

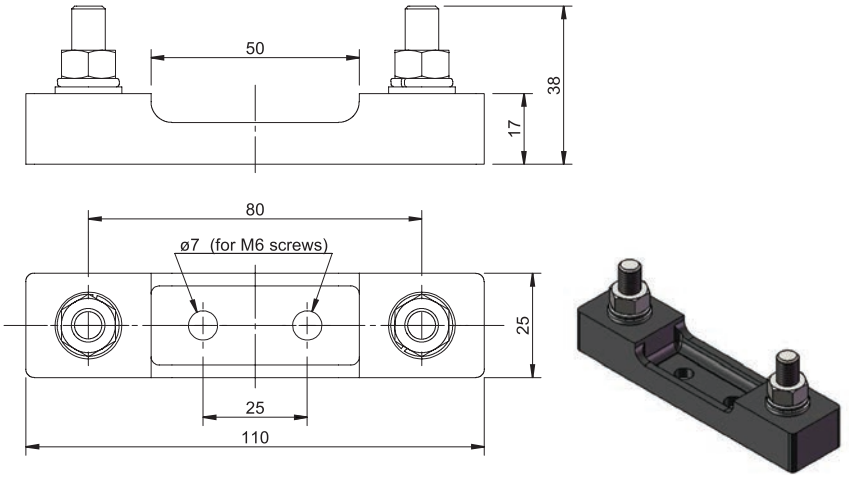

170H1013

Square Body fuse accessories

Fixed center fuse blocks for DIN 43653 fuses

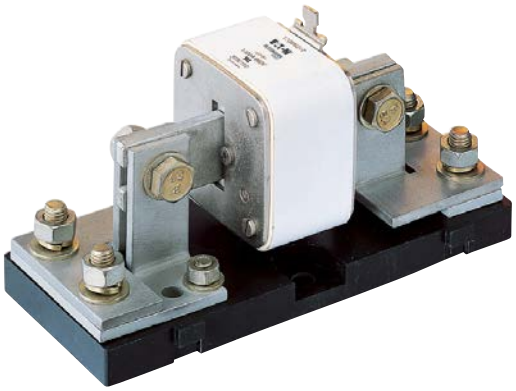

Sizes 1* to 3

Catalog no.	Max rated voltage	Max fuse amp rating	Center distance (mm)
170H3003	1000	630	80
170H3004†	1000	1250	80
170H3005	1400	630	110
170H3006†	1400	1250	110

† Fuses with ratings higher than 1250 A can be used with 170H3004 or 170H3006 if the maximum load current is derated according to this table.

Fuse amp rating	Max. amp load in fuse block
1400	1325
1500	1400
1600	1500
1800	1650
2000	1800

Dimensions — mm

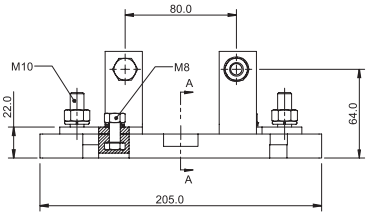

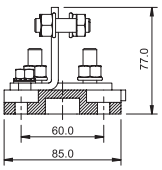

SECTION A-A

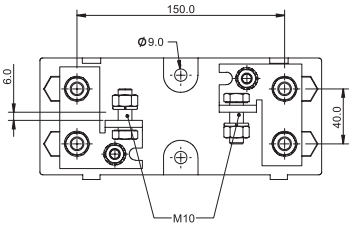

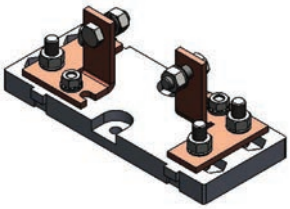

170H3003

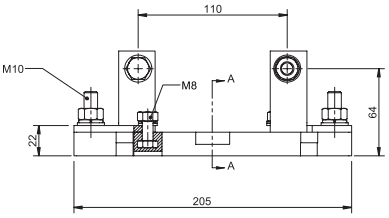

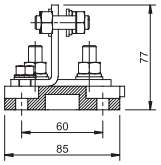

SECTION A-A

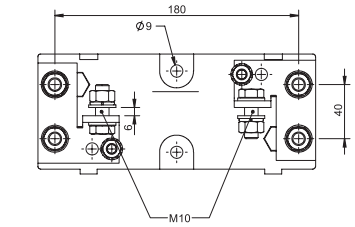

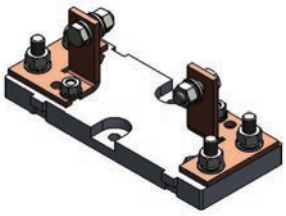

170H3005

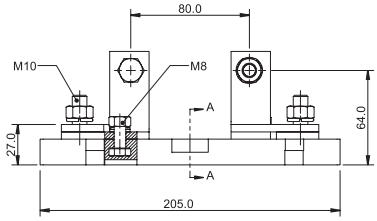

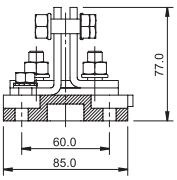

SECTION A-A

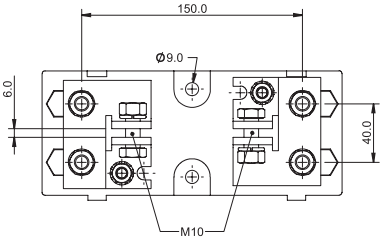

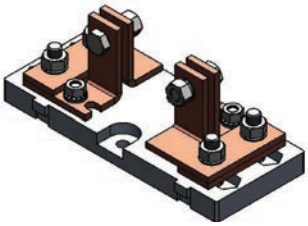

170H3004

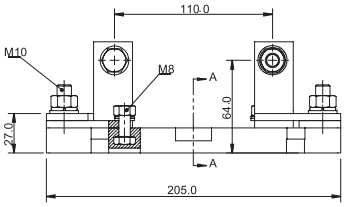

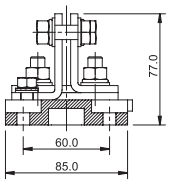

SECTION A-A

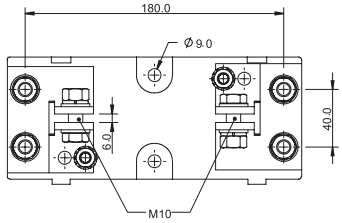

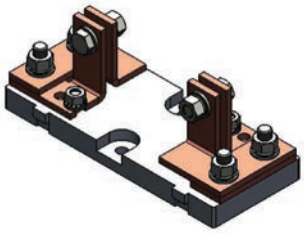

170H3006

Square Body fuse accessories

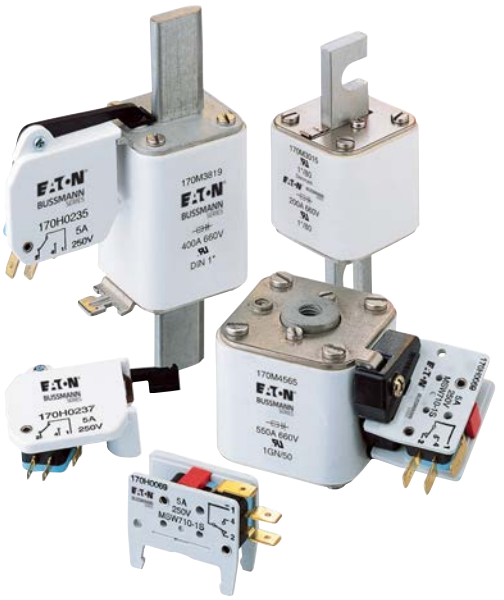

Indicators

High speed square body fuses are available with the following indicators.

Visual indicator

The indicator situated in one end plate is clearly visible as soon as the fuse has operated. The minimum rated voltage for operating the indicator is 20 V.

Type T indicator

The indicator is situated on one cover plate with a cover plate tag to accommodate an auxiliary switch. The minimum rated voltage for operating the indicator is 20 V. A special low rated voltage indicator (1.5 V) is available on request.

Type K indicator

The indicator is situated on the fuse body. It is covered by an adapter for snap-on mounting of a microswitch. The rated operating voltage of the indicator is 1.5 V. As a matter of safety, the factory mounted adapter must not be removed from the fuse.

Microswitches

High speed square body fuses with either Type T or K indicators can be equipped with a microswitch for remote signaling of fuse operation. All microswitches have one normally open (NO) and one normally closed (NC) contact.

Ratings

- Volts 250 Vac
- Amps 5 A

Catalog numbers

Fuse size	DIN 43653		DIN 43620		French style		Flush-end		US style	Quick connect terminal size (mm)
	Type T	Type K	aR	gR and dual indication	Type T	Type K	Type T	Type K	Type K	
000	170H0236	—	170H0236	170H0236	—	—	—	—	—	6.3x0.8
	170H0238	—	170H0238	170H0238	—	—	—	—	—	2.8x0.5
00	170H0235	—	170H0236	170H0236	—	—	170H0235	—	—	6.3x0.8
	170H0237	—	170H0238	170H0238	—	—	170H0237	—	—	2.8x0.5
1*	170H0235	170H0069	170H0235	—	170H0236	170H0069	—	170H0069	170H0069	6.3x0.8
	170H0237	—	170H0237	—	170H0238	—	—	—	—	2.8x0.5
1	170H0235	170H0069	170H0235[1]	170H0236	170H0236	170H0069	—	170H0069	170H0069	6.3x0.8
	170H0237	—	170H0237[1]	170H0238	170H0238	—	—	—	—	2.8x0.5
2	170H0235	170H0069	170H0235	170H0236	170H0236	170H0069	—	170H0069	170H0069	6.3x0.8
	170H0237	—	170H0237	170H0238	170H0238	—	—	—	—	2.8x0.5
3	170H0235	170H0069	170H0236	170H0236	170H0236	170H0069	—	170H0069	170H0069	6.3x0.8
	170H0237	—	170H0238	170H0238	170H0238	—	—	—	—	2.8x0.5
4	—	—	—	—	—	—	—	170H0069	—	6.3x0.8
23	—	—	—	—	—	—	—	170H0069	—	
24	—	—	—	—	—	—	—	170H0069	—	

1 DIN2* (55x55), if DIN2 then use microswitch 170H0236, 170H0238.
For special microswitches, double microswitches, microswitches with DC ratings, lower/higher signal levels and for insulation voltages please contact Eaton's Bussmann Division: bulehighspeedtechnical@eaton.com.

170M — IGBT size 000 and 230

750 Vdc (IEC), 800 Vdc (UL), 25 to 630 A

Bolted tag high speed fuses for the protection of IGBT modules, optimized for use in IGBT inverter circuits with DC fuse voltage ratings up to 750 Vdc. Low inductance ≤ 15nH.

Ratings

- Volts
  - 750 Vdc tested at 863 Vdc according to IEC 60269-4
  - 800 Vdc tested at 800 Vdc according to UL 248-1
- Amps 25-630 A
- IR 50 kA DC (1ms tc) at 800 Vdc

Operating class aR

Agency information

- UL DC Recognized, 800 Vdc L/R 1 ms max

Fuse size	Rated voltage	Rated current (amps)	I²t (A²s) Pre-arcing	I²t (A²s) Clearing at 690 Vac	Watts loss (W)†	Catalog no. -FU/70	Catalog no. -FN/70
000	750 Vdc (IEC) 800 Vdc (UL)	25	25	135	12	170M1750	170M1730
		32	45	240	13	170M1751	170M1731
		40	75	395	14	170M1752	170M1732
		50	135	695	16	170M1753	170M1733
		63	260	1350	17	170M1754	170M1734
		80	460	2350	20	170M1755	170M1735
		100	795	4000	25	170M1756	170M1736
		125	1300	6800	29	170M1757	170M1737
		160	2550	13500	34	170M1758	170M1738
		200	4350	22000	40	170M1759	170M1739
		250	7400	37500	48	170M1760	170M1740
		315	12,500	65000	60	170M1761	170M1741
		350	17,000	88000	65	170M1762	170M1742
230		100	380	1950	35	170M1770	170M1785
		125	645	3300	42	170M1771	170M1786
		160	1350	7000	47	170M1772	170M1787
		200	2550	13500	54	170M1773	170M1788
		250	4950	25000	62	170M1774	170M1789
		315	9350	47500	72	170M1775	170M1790
		350	12,000	61000	78	170M1776	170M1791
		400	18,500	94500	80	170M1777	170M1792
		450	27,000	140000	85	170M1778	170M1793
		500	37,500	190000	90	170M1779	170M1794
		550	48,500	245000	95	170M1780	170M1795
		630	69,500	355000	105	170M1781	170M1796

† Watts loss at rated current.

For details on electrical characteristics, contact Application Engineering and ask for data sheets:170K6422 (Size 000), 170K6426 (Size 230)

170M — IGBT size 000 and 230

750 Vdc (IEC), 800 Vdc (UL), 25 to 630 A

Dimensions — mm

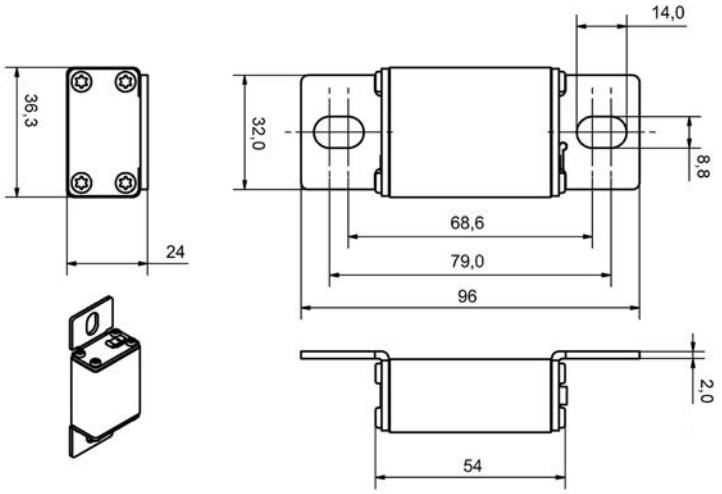

Size 000

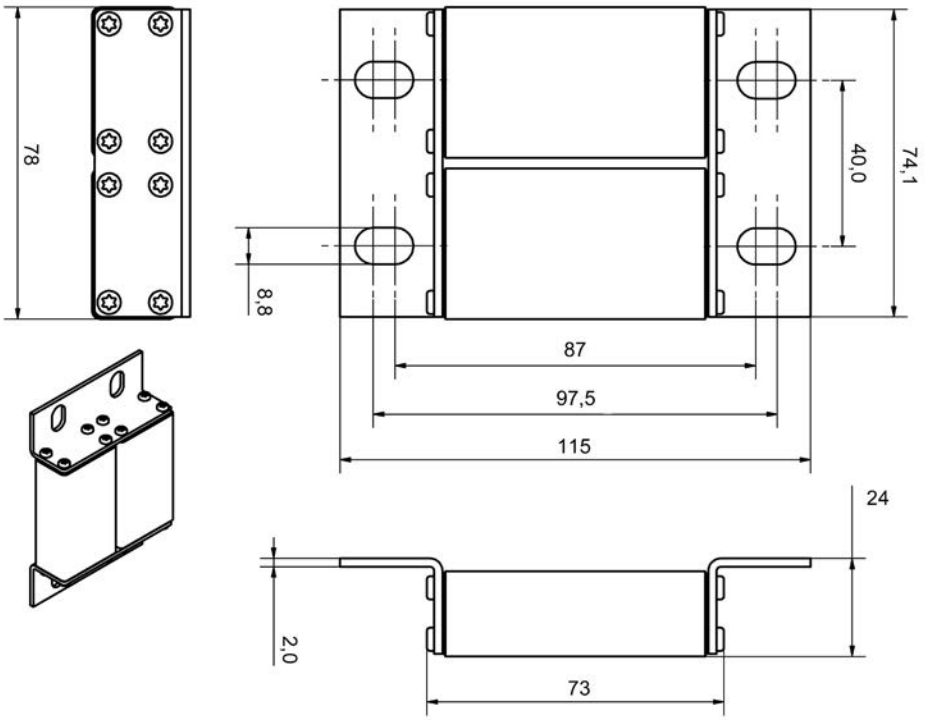

Size 230

For details on electrical characteristics, contact Application Engineering and ask for data sheets: 170K6422 (Size 000), 170K6426 (Size 230)

170M — IGBT size 000 and 230

1000 Vdc (IEC and UL), 25 to 500 A

Bolted tag high speed fuses for the protection of IGBT modules, optimized for use in IGBT inverter circuits with DC fuse voltage ratings up to 1000 Vdc. Low inductance ≤ 20nH.

Ratings

- Volts
  - 1000 Vdc tested at 1150 Vdc according to IEC 60269-4
  - 1000 Vdc tested at 1000 Vdc according to UL 248-1
- Amps 25-500 A
- IR 50 kA DC (1ms tc)

Operating class aR

Agency information

- UL DC Recognized, 1000 Vdc L/R 1ms max

Fuse size	Rated voltage	Rated current (amps)	I²t (A²s) Pre-arcing	I²t (A²s) Clearing at 1000 Vac	Watts loss (W)†	Catalog no. -FU/90	Catalog no. -FN/90
000	1000 Vdc (IEC/UL)	25	19	95	14	170M1802	170M1842
		32	34	170	17	170M1803	170M1843
		40	61	300	20	170M1804	170M1844
		50	135	675	21	170M1805	170M1845
		63	245	1200	22	170M1806	170M1846
		80	505	2500	27	170M1807	170M1847
		100	1050	5150	32	170M1808	170M1848
		125	1900	9500	34	170M1809	170M1849
		160	4050	20,000	37	170M1810	170M1850
		200	8500	42,000	43	170M1811	170M1851
		225	12,000	59,000	45	170M1812	170M1852
		250	16,000	79,500	48	170M1813	170M1853
230		100	600	3050	38	170M1824	170M1860
		125	1200	6050	42	170M1825	170M1861
		160	2550	13,000	48	170M1826	170M1862
		200	4650	23,000	55	170M1827	170M1863
		250	9300	45,500	62	170M1828	170M1864
		315	18,500	91,500	68	170M1829	170M1865
		350	24,500	125,000	75	170M1830	170M1866
		400	37,500	185,000	80	170M1831	170M1867
		450	52,000	260,000	85	170M1832	170M1868
		500	69,500	340,000	90	170M1833	170M1869

† Watts loss at rated current.

For details on electrical characteristics, contact Application Engineering and ask for data sheets: 170K6680 (Size 000), 170K6682 (Size 230)

170M — size 000 and 230

1000 Vdc (IEC and UL), 25 to 500 A

Dimensions — mm

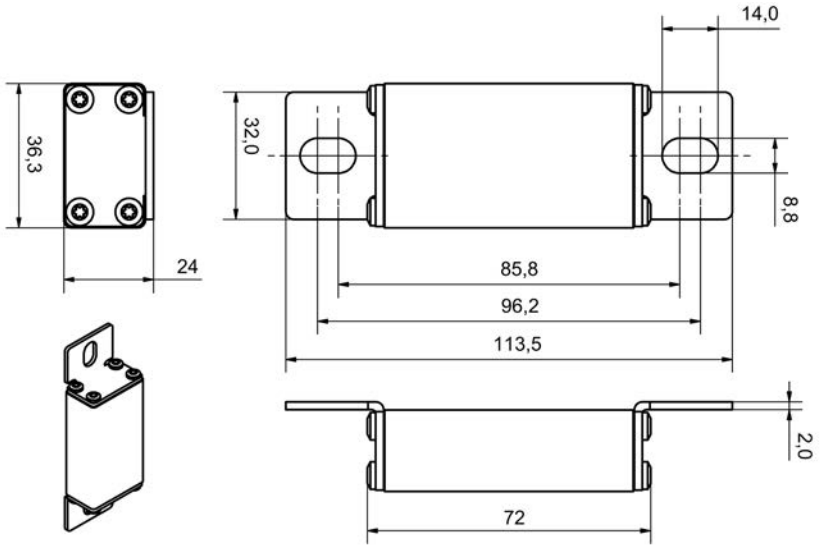

Size 000

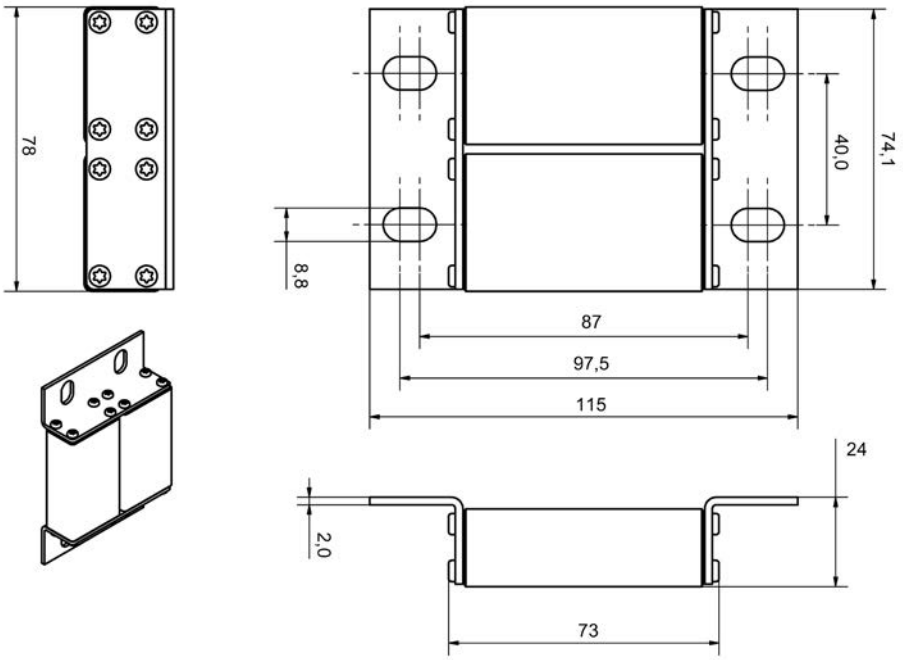

Size 230

For details on electrical characteristics, contact Application Engineering and ask for data sheets:170K6680 (Size 000), 170K6682 (Size 230)

Bussmann series IEC cylindrical fuses

Complete portfolio of 8-22 mm diameter Class aM and Class gG cylindrical fuses for industrial applications

Contents

Description	Section page
Fuses	
CSA Type P and D fuses (CDN, CDS and PON)	2
HRC Form II Class C fuses (CGL)	3
HRCI industrial ceramic body fuses	
HRCI-CA (CIF21)	4
HRCI-CB (CIF06)	
HRCI-Misc. Type K (CIH, CIK and CIL)	5
HRC Form II current-limiting fuses (H07C, K07C, L14C, M14C, L09C, M09C, P09C, P11C, R11C)	6
BS88 Part 1 fuses	
SSD, NSD, ESD	7
STD, NITD, AAO, BAO, OSD, CEO, DEO	
BS88	
AC, AD, BC, BD, CD, DD, ED, EFS	8
EF, FF, FG, GF, GG, GH	
DIN Type D Diazed (D16, D27, D33, D125)	9
DIN Type N Neozed (NZ01, NZ02)	
NH HRC fuses (NHG)	10-11
JKS-700 fast-acting, current limiting UL Recognized and CSA Component Acceptance 700 Vac fuses up to 60 amps	11
NH fuse blocks and accessories (SD, TD)	**12**
Fuses continued	
IEC 60269 industrial fuses with and without indicator/striker	
Class gG ferrule (C10G, C14G, C22G)	13
Class aM ferrule (C10M, C14M, C22M)	14
HRC fuse holders	
CAMaster	15
SAFEloc	
Red Spot	

CDN, CDS and PON CSA Type P and D fuses

CSA time-delay Type D and P fuses.

Ratings

- Volts
  - 250 Vac (CDN and PON)
  - 600 Vac (CDS)
- Amps 10-600 A
- IR 10 kA minimum

Agency information

- CSA Certified, Class 1421-01, File 53787, CE

Features

- Economical fuse in a variety of ratings for applications not requiring time-delay

Typical applications

- Lighting, heating and other circuits not subject to temporary surges and where available short-circuit current are relatively low

Catalog no.*		
Catalog symbol	**Volts**	**Available amp ratings**
Time-Delay CSA Type "D" fuses		
CDN**	250 Vac	10, 12, 15, 20, 25, 30, 35, 40, 45, 50, 60, 70, 80, 90, 100, 110, 125, 150, 175, 200, 225, 250, 300, 350, 400, 450, 500, 600
CDS†	600 Vac	10, 12, 15, 20, 25, 30, 35, 40, 45, 50, 60, 70, 80, 90, 100, 110, 125, 150,175, 200, 225, 250, 300, 350, 400, 450, 500, 600
One-time CSA Type "P" fuses		
PON	250 Vac	15, 20, 25, 30, 35, 40, 45, 50, 60

* To order, specify catalog symbol and amp rating, e.g., CDN30, CDS110 or PON40.
**Below 10 amps, use FRN-R.
† Below 10 amps, use FRS-R.

Dimensions — in (mm)

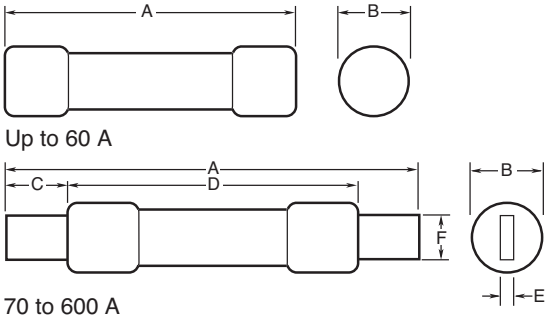

Amps	A	B	C	D	E	F
CDN/PON 250 Vac						
Up to 30	2.0 (51)	0.6 (14)	—	—	—	—
35-60	3.0 (76)	0.8 (21)	—	—	—	—
70-100	5.9 (149)	—	1.0 (25)	—	0.1 (3)	0.8 (19)
110-200	7.3 (185)	—	1.4 (35)	4.1 (105)	0.2 (5)	1.1 (29)
225-400	8.6 (219)	—	1.9 (48)	4.6 (118)	0.3 (6)	1.6 (41)
450-600	10.4 (264)	—	2.3 (57)	5.2 (132)	0.3 (6)	2 (51)
CDS 600 Vac						
Up to 30	5.0 (127)	0.8 (21)	—	—	—	—
35-60	5.5 (140)	1.1 (27)	—	—	—	—
70-100	7.9 (200)	—	1.0 (25)	—	0.1 (3)	0.8 (19)
110-200	9.6 (245)	—	1.4 (35)	6.1 (116)	0.2 (5)	1.1 (29)
225-400	11.6 (295)	—	1.9 (48)	7.1 (118)	0.3 (6)	1.6 (41)
450-600	13.4 (340)	—	2.3 (57)	8.2 (208)	0.3 (6)	2 (51)

Recommended fuse blocks

Catalog no.*	Volts	
Fuse amps	**250**	**600**
Up to 30	HM25030-(poles)	HM60030-(poles)
35-60	HM25060-(poles)	HM60060-(poles)
70-100	HM25100-(poles)	HM60100-(poles)
110-200	HM25200-(poles)	HM60200-(poles)
225-400	HM25400-(poles)	HM60400-(poles)
450-600	HM25600-(poles)	HM60600-(poles)

* To order, specify 1, 2 or 3 poles, e.g., HM25030-**2**_. See data sheets 10289 (30-60 A) and 3192 (70-600 A) for available terminals.

Data sheet no. 4126

CGL HRC Form II Class C fuses

Current-limiting HRCII-C fuses designed to withstand inrush currents on typical motor start-ups while offering high current limitation in the short-circuit region. See drawings for dimensions.

Ratings

- Volts
  - 600 Vac
  - 250 Vdc (1-30 A)
- Amps 1-600 A
- IR
  - 200 kA
  - 40 kA DC

Agency information

- CSA Certified, Class 1422,File 53787, CE

Catalog no. (amps)			
CGL-1	CGL-25	CGL-80	CGL-225
CGL-2	CGL-30	CGL-90	CGL-250
CGL-3	CGL-35	CGL-100	CGL-300
CGL-4	CGL-40	CGL-110	CGL-350
CGL-6	CGL-45	CGL-125	CGL-400
CGL-10	CGL-50	CGL-150	CGL-450
CGL-15	CGL-60	CGL-175	CGL-500
CGL-20	CGL-70	CGL-200	CGL-600

Features

- Close sizing to loads allows using smaller and less costly switches
- Provides a higher degree of short-circuit protection
- Helps protect motors against burnout from overloads

Typical applications

- For use in circuits subject to surge currents such as those caused by motors, transformers and other inductive loads

Available Red Spot fuse holders

Fuse amps	Catalog symbol*
Up to 32	RS32_
35-60	RS63_
70-100	RS100_
110-200	RS200_
225-400	RS400_

* See Red Spot data sheet no. 10083 for terminal options.

Dimensions — in (mm)

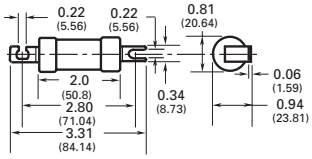

CGL 1-30

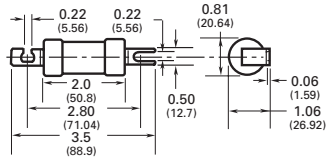

CGL 35-60

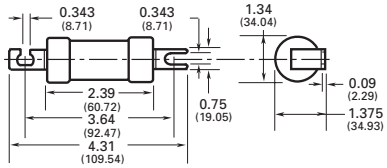

CGL 70-100

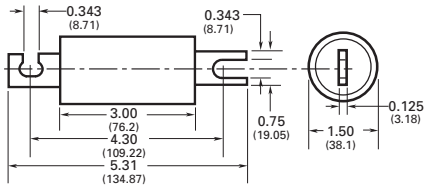

CGL 110-200

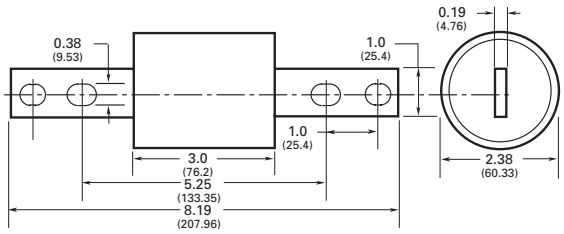

CGL 225-400

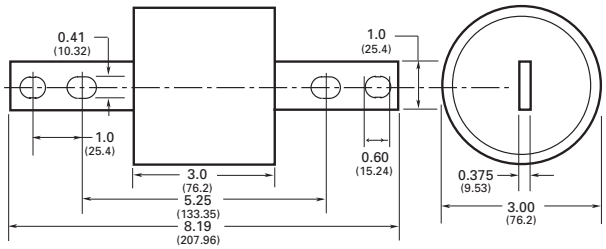

CGL 450-600

CIF21 HRCI-CA industrial ceramic body fuses

The HRCI-CA bolt-on, ceramic body fuse provides both overload and short-circuit protection to HRCI requirements. Offset blades for bolt-on mounting CIF21 fuse fits the Bussmann series Red Spot fuse holder (data sheet 10083) and CAMaster fuse holder (data sheet number 4132).

Ratings

- Volts
  - 600 Vac
  - 250 Vdc
- Amps 1-30 A
- IR 200 kA RMS Sym.

Agency information

- CSA, Class 1422-02, File 53787, CE

Catalog no.	Amps	Catalog no.	Amps
1CIF21	1	15CIF21	15
3CIF21	3	20CIF21	20
6CIF21	6	25CIF21	25
10CIF21	10	30CIF21	30

Features

- Close sizing to loads allows using smaller and less costly switches
- Provides a higher degree of short-circuit protection
- Helps protect motors against burnout from overloads

Typical applications

- For use in circuits subject to surge currents such as those caused by motors, transformers and other inductive loads

Recommended fuse holders

Amps	Description	Catalog no.*
Up to 20	Red Spot	RS20_(terminal option)
Up to 30	CAMaster	CM20CF

* See data sheet no. 10083 (Red Spot) and 4132 (CAMaster) for details.

Dimensions — in (mm)

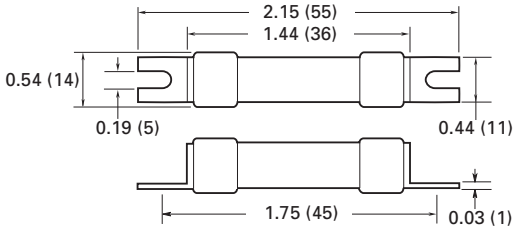

CIF06 HRCI-CB industrial ceramic body fuses

A miniature offset clip-in blade, ceramic body industrial fuse that provides both short-circuit and overload protection and the CIF06 fits the 30 A SAFEloc fuse holder (data sheet number 4133).

Ratings

- Volts
  - 600 Vac
  - 250 Vdc
- Amps 1-30 A
- IR 200 kA RMS Sym.

Agency information

- CSA, Class 1422-02, File 53787 (3-30 A only), CE

Catalog no.	Amps	Catalog no.	Amps
1CIF06	1	15CIF06	15
3CIF06	3	20CIF06	20
6CIF06	6	25CIF06	25
10CIF06	10	30CIF06	30

Features

- Close sizing to loads allows using smaller and less costly switches
- Provides a higher degree of short-circuit protection
- Helps protect motors against burnout from overloads

Typical applications

- For use in circuits subject to surge currents such as those caused by motors, transformers and other inductive loads

Recommended fuse holders

Amps	Description	Catalog no.*
Up to 30	SAFEloc	C30(terminal option)

* See data sheet no. 4133 for SAFEloc details.

Dimensions — in (mm)

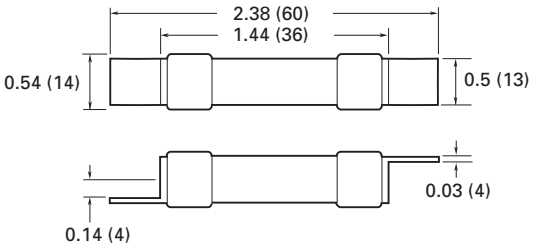

Data sheet no. 4127

Data sheet no. 4128

CIH, CIK and CIL HRCI — Misc. Type K fuses

Misc. Type K HRCI bolt-on, ceramic body fuses provide both overload and short-circuit protection, featuring offset blades for bolt down mounting.

Ratings

- Volts 600 V
- Amps 1-100 A
- IR 200 kA@600 V

Agency information

- CSA, Class 1422-02, File 53787, CE

Catalog no. (amp)CIH, CIK, CIL			
1CIH07	15CIH07	35CIK07	80CIL14
3CIH07	20CIH07	40CIK07	90CIL14
6CIH07	25CIH07	50CIK07	100CIL14
10CIH07	30CIH07	60CIK07	

Dimensions — in (mm)

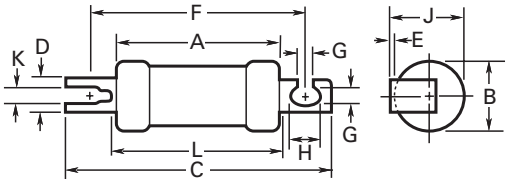

The CIL14 has a rejection hole, not a slot as shown above.

Amps	A	B	C	D	E	F	G	H	J	K	L
Up to 30	2.25 (57)	0.94 (24)	3.38 (86)	0.38 (10)	0.04 (1)	2.88 (73)	0.21 (5)	0.31 (8)	1 (25)	0.10 (3)	2.38 (60)
35-60	2.28 (58)	1.06 (27)	3.56 (91)	0.5 (13)	0.05 (1)	2.88 (73)	0.21 (5)	0.41 (11)	1.09 (28)	0.13 (3)	2.38 (61)
80-100	2.75 (70)	1.44 (37)	4.38 (111)	0.75 (19)	0.09 (3)	3.69 (94)	0.34 (9)	0.41 (11)	1.5 (39)	—	2.91 (74)

Recommended fuse holders

Amps	Red Spot*	CAMaster*
Up to 30	RS32_	CM30CF
35-60	RS63_	CM60CF
80-100	RS100_	—

* See data sheet no. 10083 (Red Spot) and 4132 (CAMaster) for details.

Data sheet no. 4130

HRC Form II current-limiting fuses

HRC Form II bolt-on, ceramic body current-limiting fuses.

Ratings

- Volts
  - 600 Vac (or less)
  - 250 Vdc
- Amps 2-600 A
- IR 200 kA RMS Sym.

Agency information

- CSA, Class 1422-02, File 53787, BS88:2, IEC 60269:2, CE

(amps) catalog no.			
H07C offset blades			
2H07C	6H07C	15H07C	25H07C
4H07C	10H07C	20H07C	30H07C
K07C offset blades			
40K07C	60K07C	100K07CR	
50K07C	80K07CR		
L14C offset blades			
80L14C	100L14C		
M14C offset blades			
125M14C*	150M14C*	200M14C*	
L09C center blades			
80L09C*	100L09C*		
M09C center blades			
125M09C	150M09C	200M09C	
P09C center blades			
250P09C*	300P09C*	350P09C*	400P09C*
P11C center blades			
250P11C	300P11C	350P11C	400P11C
R11C center blades			
450R11C	500R11C	600R11C	

* Not suitable for installation in Red Spot fuse holders.

Typical applications

- Used to protect motor control circuits, together with contactors and overload protection relays to provide Type 2 coordination per IEC 60947-4.

Recommended fuse holders: Red Spot up to 400 amps (data sheet no.10083) and CAMaster up to 100 amps (data sheet no. 4132).

Dimensions — in (mm)

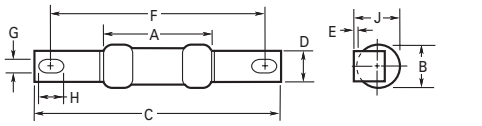

H07C offset blades

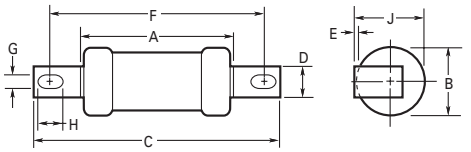

K07C, K07CR, L14C, M14C offset blades

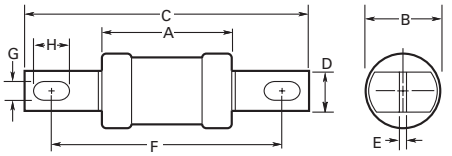

L09C, M09C, P09C center blades

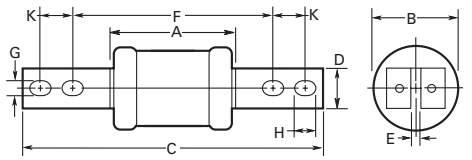

P11C, R11C center blades

Catalog symbol/ style	A	B	C	D	E	F	G	H	J	K	CSA category
H07C offset blades											
2-30	1.38 (35)	0.56 (14)	3.38 (85)	0.38 (9)	0.06 (1)	2.88 (73)	0.22 (6)	0.31 (8)	0.56 (14)	—	HRCII-C
K07C offset blades											
40-60	2.19 (56)	0.88 (22)	3.44 (87)	0.5 (13)	0.06 (1)	2.88 (73)	0.22 (6)	0.31 (8)	0.88 (22)	—	HRCII-C
80-100	2.19 (56)	0.88 (22)	3.75 (95)	0.5 (13)	0.06 (1)	2.88 (73)	0.22 (6)	0.31 (8)	0.88 (22)	—	HRCII-MISC
L14C offset blades											
80-100	2.38 (60)	0.88 (21)	4.38 (111)	0.56 (14)	0.13 (3)	3.69 (94)	0.34 (9)	0.44 (11)	1 (25)	—	HRCII-C
M14C offset blades											
125-200	2.56 (65)	1.5 (38)	4.38 (111)	0.75 (19)	0.09 (2)	3.69 (94)	0.34 (9)	0.44 (11)	—	—	HRCII-MISC
L09C center blades											
80-100	2.38 (60)	0.88 (21)	5 (127)	0.56 (14)	0.13 (3)	4.38 (111)	0.34 (9)	0.44 (11)	—	—	HRCII-MISC
M09C center blades											
125-200	2.56 (65)	1.5 (38)	5.38 (136)	0.75 (19)	0.13 (3)	4.38 (111)	0.34 (9)	0.56 (14)	—	—	HRCII-C
P09C center blades											
250-400	3.06 (178)	2.31 (59)	5.38 (136)	1 (25)	0.19 (5)	4.38 (111)	0.34 (9)	0.5 (13)	—	—	HRCII-MISC
P11C center blades											
250-400	3.06 (178)	2.31 (59)	8.25 (210)	1 (25)	0.19 (5)	5.25 (133)	0.41 (10)	0.63 (16)	—	1 (25)	HRCII-C
R11C center blades											
450-600	3.19 (81)	2.88 (73)	8.25 (210)	1 (25)	0.25 (6)	5.25 (133)	0.41 (10)	0.63 (16)	—	1 (25)	HRCII-C

Data sheet no. 4131

SSD, NSD, ESD BS88 Part 1 fuses

The NSD and ESD are low voltage offset blade, ceramic body fuses complying with general purpose gG characteristics.

Ratings

- Volts 240-550 Vac
- Amps
  - 2-63 A
  - 20M25 to 63M100 motor starter ratings
- IR
  - 33 kA (SSD)
  - 80 kA (NSD, ESD)

Agency information

- Meets the requirements of BS88 Part 1 and IEC 60269-1, CE

Catalog no.*			
Catalog symbol	**Amps (class)**	**Max Vac**	**BS88 ref.**
SSD	2, 4, 6, 10, 16, 20, 25, 32 (gG)	240	E1
NSD†	2, 4, 6, 10, 16, 20, 25, 32 (gG)	550	F1
	20M25, 20M32, 20M36, 32M36, 32M40, 32M50, 32M63 (gM)	415	
ESD†	2, 4, 6, 10, 16, 20, 25, 32 (gG)	550	F2
	40, 50, 63 (gG)	415	
	63M80, 63M100 (gM)		

* To order, specify catalog symbol and amp rating, e.g., SSD20.
† "M" indicates motor starter ratings.

Recommended fuse holders

Fuse symbol	Catalog no.
NSD	32NNSF
ESD	63ENSF

Data sheet no. 4105 (SSD), 4100 (NSD) and 4101 (ESD)

STD, NITD, AAO, BAO, OSD, CEO, DEO BS88 Part 1 fuses

The STD to DEO type ceramic body, offset bolt-on blade low voltage fuses complying with general purpose gG characteristics.

Ratings

- Volts 240-550 Vac
- Amps
  - 2-200 A
  - 20M25 to 200M315 motor starter ratings
- IR
  - 33 kA (STD)
  - 80 kA (NITD, AAO, BAO, CEO, DEO, OSD)

Agency information

- Meets the requirements of BS88 Part 1 and IEC 60269-1, CE

Catalog no.*			
Catalog symbol	**Amps (class)**	**Max Vac**	**BS88 ref.**
STD	2, 4, 6, 10, 16, 20, 25, 32 (gG)	240	—
NITD†	2, 4, 6, 10, 16, 20, 25, 32 (gG)	550	—
	20M25, 20M32 (gM)		
	32M40, 32M50, 32M63 (gM)	415	
AAO†	2, 4, 6, 10, 16, 20, 25, 32, (gG)	550	A2
	32M40, 32M50, 32M63 (gM)	500	
BAO†	40, 50, 63 (gG)	500	A3
	63M80, 63M100 (gM)		
CEO†	32, 40, 50, 63, 80, 100 (gG)	550	A4
	100M125, 100M160, 100M200 (gM)	415	
DEO†	125, 160, 200 (gG)	415	—
	200M315 (gM)		
OSD†	80, 100 (gG)	500	—
	100M125, 100M160 (gM)	415	

* To order, specify basic catalog symbol and amp rating. E.g., BAO16.
† "M" indicates motor starter ratings.

Typical applications

- The STD type are used in 240 V street lighting cut-outs
- NITD to DEO types used for industrial and general purpose applications

Recommended fuse blocks and holders

Fuse catalog symbol	Block/holder catalog no.*
NITD	CM32FC, RS20_
AAO	CM32F, RS32_
BAO	CM63F, RS63_
OSD	CM100F, RS100_
CEO	BH-0111

* See data sheet no. 4132 (CM_), 10083 (RS_) and 1200 (BH-_).

Data sheet no. 4123 (STD), 4106 (NITD), 4109 (AAO), 4112 (BAO), 4107 (OSD), 4115 (CEO) and 4117 (DEO)

AC, AD, BC, BD, CD, DD, ED, EFS BS88 fuses

Ceramic body, center blade two-hole bolt-on low voltage fuses that comply with general purpose gG characteristics and available up to 400 amps with two hole mount and up to 1250 amps with four hole mount.

Ratings

- Volts
  - 415/550 Vac
  - 250 Vdc
- Amps
  - 2-400 A
  - 63M80 to 400M500 motor starter ratings
- IR see catalog numbers table

Agency information

- Meets the requirements of BS88 Parts 1 and 2 and IEC 60269-1, CE

Catalog no.*		IR (kA)		Max volts		
Catalog symbol	Amps (class)	AC	DC	AC	DC	BS88 ref.
AC	2, 4, 6, 10, 16, 20 (gG)	80	40	550	250	—
	25, 32 (gG)			500		
AD	2, 4, 6, 10, 16, 20 (gG)	80	40	550	250	—
	25, 32 (gG)			500		
BC†	40, 50, 63 (gG)	80	40	500	250	—
	63M80, 63M100 (gM)					
BD	40, 50, 63 (gG)	80	40	500	250	—
CD†	CD80, CD100 (gG)	80	—	500	—	B1
	100M125, 100M160, 100M200 (gM)			415	—	
DD†	125, 160, 200 (gG)	80	—	415	—	B2
	200M250, 200M315 (gM)					
ED†	250, 315, 355, 400 (gG)	80	—	415	—	B3 B4
	315M400 (gM)					
	400M500 (gM)			550		
EFS	125, 160, 200, 250, 315 (gG)	80	—	415	—	—

* To order, specify catalog symbol and amp rating. E.g., BC40.
† "M" indicates motor starter ratings.

Recommended fuse blocks

Fuse catalog symbol	Modular block catalog no.*
AC	BH-0111
AD	BH-____
BC	BH-0111
BD	BH-____
CD	BH-____
DD	BH-____
ED	BH-1131

* See data sheet no. 1200 (BH-0_) and 1201 (BH-1_) for details.

Data sheets no. 4110 (AC), 4111 (AD), 4113 (BC), 4114 (BD), 4116 (CD), 4118 (DD), 4119 (ED) and 4121 (EFS)

EF, FF, FG, GF, GG, GH BS88 fuses

Ceramic body, center blade four-hole bolt-on low voltage fuses complying with general purpose gG characteristics and available up to 400 amps with two hole mount and up to 1250 amps with four hole mount.

Ratings (see catalog numbers table)

- Volts
  - 415/690 Vac
  - 250/400 Vdc
- Amps 355-1250 A
- IR see catalog numbers table

Agency information

- Meets the requirements of BS88 Parts 1 and 2 and IEC 60269-1, CE

Catalog no.*		IR (kA)		Max volts		
Catalog symbol	Amps (class)	AC	DC	AC	DC	BS88 ref.
EF†	355, 400 (gG)	80	40	415	—	C1
	400M500 (gM)			550		
FF	450, 500, 560, 630 (gG)	80	40	550	400	C2
FG	450, 500, 560, 630 (gG)	80	40	550	400	—
GF	710, 800 (gG)	80	40	550	250	C3
GG	710, 800 (gG)	80	40	550	250	—
	1000, 1250 (gG)		—		—	
GH	710, 800, 1000, 1250	80	—	550	—	D1

* To order, specify catalog symbol and amp rating, e.g., FG450.
† "M" indicates motor starter ratings.

Data sheet no. 4120 (EF), 4102 (FF), 4122 (FG), 4103 (GF), 4104 (GG) and 4108 (GH)

D16, D27, D33, D125 DIN Type D Diazed fuses

DIN style Type D ceramic body low voltage fuses.

Ratings

- Volts 500 Vac
- Amps 2-100 A
- IR 50 kA

Agency information

- IEC 60269 and DIN 49515, CE

Catalog no.	Amps	"D" dimension	Color code	Fig.
2D16	2	6	Pink	1
4D16	4	6	Brown	
6D16	6	6	Green	
10D16	10	8	Red	
16D16	16	10	Grey	
20D16	20	12	Blue	
25D16	25	14	Yellow	
2D27	2	6	Pink	2
4D27	4	6	Brown	
6D27	6	6	Green	
10D27	10	8	Red	
16D27	16	10	Grey	
20D27	20	12	Blue	
25D27	25	14	Yellow	
35D33	35	16	Black	3
50D33	50	18	White	
63D33	63	20	Copper	
80D125	80	5	Silver	4
100D125	100	7	Red	

Additional 500 V quick acting fuses in body sizes D16, D27, D33 and D125 rated 2-100 A. Reference number suffixed "Q." E.g., 10D27**Q**.

Gauge rings and keys can also be supplied.

Dimensions — mm

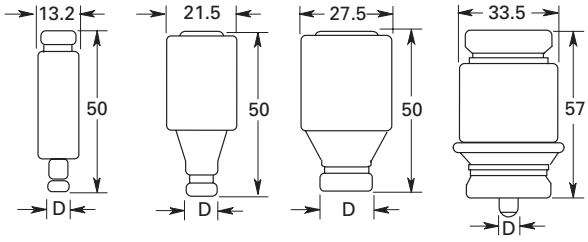

Fig. 1 Fig. 2 Fig. 3 Fig. 4

NZ01, NZ02 DIN Type N Neozed fuses

DIN style Type N ceramic body low voltage.

Ratings

- Volts 400 Vac
- Amps 2-63 A
- IR 50 kA

Agency information

- IEC 60269 and DIN 49515, CE

Catalog no.	Amps	"D" dimension	Color code
2NZ01	2	11	Pink
4NZ01	4	11	Brown
6NZ01	6	11	Green
10NZ01	10	11	Red
16NZ01	16	11	Grey
20NZ02	20	15	Blue
25NZ02	25	15	Yellow
35NZ02	35	15	Black
50NZ02	50	15	White
63NZ02	63	15	Copper

Dimensions — mm

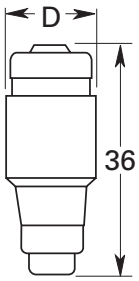

___NHG___B NH HRC fuses

DIN 000 to 4 Class: gG/gL DIN square bodied, dual indication industrial fuses with voltage conducting metal gripping lugs. They are made of a steatite insulator, corrosion-proof (aluminum) metal parts with full-contact and silver-plated copper blades. All NHG fuses feature a selectivity ratio: 1:1.6 up to 500 Vac.

Ratings

- Volts
  - 500 Vac
  - 690 Vac
- Amps 2-1250 A
- IR 120 kA
- Frequency
  - 45-62 Hz operating

Agency information

- IEC 60269, VDE 0636, DIN 43620
- CE (500 Vac only)

Dimensions — mm

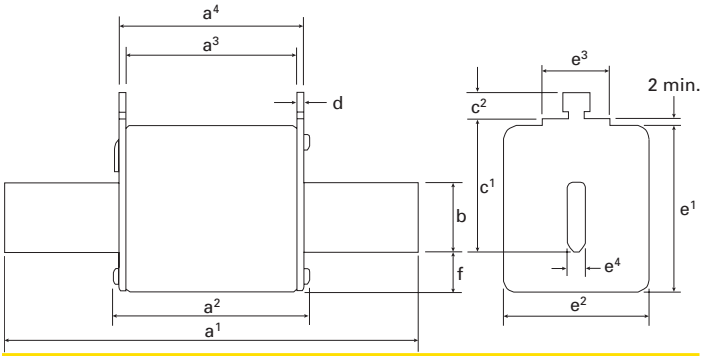

Fuse size	a1	a2	a3	a4	b	c1	c2	D	e1	e2	e3	e4	f
000	79	54	45	49	15	35	10	2	41	21	16	6	8
00	79	54	45	49	15	35	11	7.0	48	30	25	6	15
0	125	68	62	68	15	35	11	2.5	48	30	25	6	15
01	135	75	62	68	15	40	11	2.5	48	30	25	6	15
1	135	75	62	68	20	40	11	2.5	53	52	25	6	15
02	150	75	62	68	20	48	11	2.5	53	52	25	6	15
2	150	75	62	68	25	48	11	2.5	61	60	25	6	15
03	150	75	62	68	25	60	11	2.5	61	60	25	6	15
3	150	75	62	68	32	60	11	3.0	75	70	25	6	18
4	200	84	80	90	50	85	11	3	120	87	—	8	30

Recommended fuse blocks

Block catalog no.	Fuse size
SD00-D	000-00
SD1-D	1*, 1
SD2-D	02, 2, 03, 3

___NHG___B NH HRC fuses

500 Vac gG/gL dual indicator voltage conducting metal gripping lugs

Amps	Catalog no.
000 size	
2	2NHG000B
4	4NHG000B
6	6NHG000B
10	10NHG000B
16	16NHG000B
20	20NHG000B
25	25NHG000B
32	32NHG000B
35	35NHG000B
40	40NHG000B
50	50NHG000B
63	63NHG000B
80	80NHG000B
100	100NHG000B
00 size	
50	50NHG00B
63	63NHG00B
80	80NHG00B
100	100NHG00B
125	125NHG00B
160	160NHG00B
0 size	
6	6NHG0B
10	10NHG0B
16	16NHG0B
20	20NHG0B
25	25NHG0B
32	32NHG0B
35	35NHG0B
40	40NHG0B
50	50NHG0B
63	63NHG0B
80	80NHG0B
100	100NHG0B
125	125NHG0B
160	160NHG0B
01 size	
6	6NHG01B
10	10NHG01B
16	16NHG01B
20	20NHG01B
25	25NHG01B
32	32NHG01B
35	35NHG01B
40	40NHG01B
50	50NHG01B
63	63NHG01B
80	80NHG01B
100	100NHG01B
125	125NHG01B
160	160NHG01B

Amps	Catalog no.
1 size	
50	50NHG1B
63	63NHG1B
80	80NHG1B
100	100NHG1B
125	125NHG1B
160	160NHG1B
200	200NHG1B
224	224NHG1B
250	250NHG1B
315	315NHG1B
355	355NHG1B
02 size	
35	35NHG02B
40	40NHG02B
50	50NHG02B
63	63NHG02B
80	80NHG02B
100	100NHG02B
125	125NHG02B
160	160NHG02B
200	200NHG02B
224	224NHG02B
250	250NHG02B
2 size	
250	250NHG2B
300	300NHG2B
315	315NHG2B
355	355NHG2B
400	400NHG2B
425	425NHG2B
450	450NHG2B
500	500NHG2B
03 size	
250	250NHG03B
315	315NHG03B
355	355NHG03B
400	400NHG03B
3 size	
315	315NHG3B
355	355NHG3B
400	400NHG3B
425	425NHG3B
450	450NHG3B
500	500NHG3B
630	630NHG3B
800	800NHG3B
4 size*	
500	500NHG4G
630	630NHG4G
800	800NHG4G
1000	1000NHG4G
1250	1250NHG4G

* Size 4 is a a single indicator fuse with slotted end blades.

Data sheet no. 10164 (500 V), 720109 (690 V)

___NHG___B NH HRC fuses

690 Vac gG/gL dual indicator voltage conducting metal gripping lugs

Amps	Catalog no.
000 size	
2	2NHG000B-690
4	4NHG000B-690
6	6NHG000B-690
10	10NHG000B-690
16	16NHG000B-690
20	20NHG000B-690
25	25NHG000B-690
32	32NHG000B-690
35	35NHG000B-690
40	40NHG000B-690
50	50NHG000B-690
63	63NHG000B-690
00 size	
50	50NHG00B-690
63	63NHG00B-690
80	80NHG00B-690
100	100NHG00B-690
125	125NHG00B-690
160*	160NHG00B-690
1 size	
50	50NHG1B-690
63	63NHG1B-690
80	80NHG1B-690
100	100NHG1B-690
125	125NHG1B-690
160	160NHG1B-690
200	200NHG1B-690
224	224NHG1B-690
250	250NHG1B-690

Amps	Catalog no.
2 size	
200	200NHG2B-690
224	224NHG2B-690
250	250NHG2B-690
315	315NHG2B-690
3 size	
250	250NHG3B-690
315	315NHG3B-690
355	355NHG3B-690
400	400NHG3B-690
425	425NHG3B-690
500	500NHG3B-690
4 size**	
630	630NHG4B-690
800	800NHG4B-690

* 160 amps rated at 660 Vac.
**Size 4 is a single indicator fuse with slotted end blades.

JKS-700 fast-acting fuses

The JKS-700 is a fast-acting, current-limiting fuse that is UL Recognized and has CSA Component Acceptance for applications up to 700 Vac. The JKS-700 is available in ratings up to 60 amps with the same dimensions as a standard Class J fuses; but its voltage rating places it outside the standard Class J fuse class.

Bussmann recommends the JM70100 modular fuse block and the JM70100-MW power distribution fuse block for the 30 amp case size JKS-700 fuses. See page 8-18 for details.

Ratings

- Volts 700 Vac (or less)
- Amps 25-60 A
- IR
  - Minimum $6I_n$
  - 200 kA RMS Sym.

Operating class aR

Agency information

- UL Recognized, 248-13 Semiconductor Fuses, File E56412
- CSA Component Acceptance, C22.2 No 248.13 Semiconductor Fuses, Class 1422-30

Features

- Current limitation for non-inductive circuits provides current-limiting response to maximum ground fault and short-circuit conditions
- 200 kA interrupting rating provides protection at all circuit locations
- Economical circuit protection for high-fault current circuits

Typical applications

- Power panelboards up to 700 Vac
- Machinery disconnects up to 700 Vac

Catalog no. (amps)			
JKS-25-700	JKS-30-700	JKS-35-700	JKS-60-700

Data sheet no. 10164 (500 V), 720109 (690 V)

Data sheet no. 1026

SD_ and TD_ NH fuse blocks

NH fuse bases feature thermoplastic bodies, and DIN-Rail and screw mounting (size 4 is screw fix). They are available with a range of protection accessories for live parts for IP20 protection.

Ratings

- Volts
  - 690 Vac
  - 1000 Vac (SD1-D only)
- Amps up to 1250 A
- NH fuse sizes 000 to 4

Agency information

- IEC 60269-1 and 2
- VDE 0636-1 and 2

Typical applications

- Protecting industrial circuits and electrical apparatus

Catalog no.					
Fuse size	Poles	Amps	Catalog no.	Carton qty.	Accepts fuse sizes
DIN-Rail or screw mount					
00	1	160	SD00-D	3	000 and 00
	3		TD00-D	1	
1	1	250	SD1-D	3	01 and 1
	3		TD1-D	1	
2	1	400	SD2-D	3	02 and 2
	3		TD2-D	1	
3	1	630	SD3-D	3	03 and 3
	3		TD3-D	1	
Screw mount only					
4	1	1250	SD4-S	3	4

Neutrals

NH size	Amps	Catalog no.	Carton qty.
1	250	SDL-1	3
2	400	SDL-2	3
3	630	SDL-3	3

Fuse extraction handle

Size	Catalog no.	Carton qty.
C00-3	FEH	1

Shroud kits

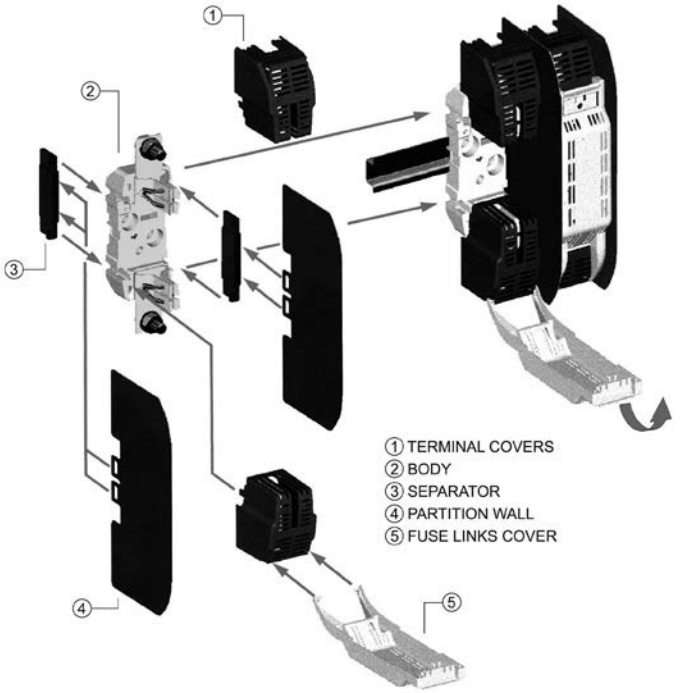

Catalog no.	Fits fuse block
TD00-IP20	TD00-D
TD1-IP20	TD1-D
TD2-IP20	TD2-D
TD3-IP20	TD3-D
SD00-SK	SD00-D
SD12-SK	SD1 and SD2
SD3-SK	SD3

Phase barrier kits

Catalog no.	Fits fuse block
SD00-PB	SD00-D
SD12-PB*	SD1 and SD2
SD3-PB*	SD3

* Kits include 2 phase barriers and 2 ganging links.

Data sheet 10163

Class gG IEC 60269 industrial ferrule fuses

10 to 22mm diameter IEC Class gG fuses with optional indicators (10x38mm only) and strikers. See catalog numbers for availability and ratings.

10x38mm, Class gG, 500 and 400 Vac, 0.5 to 50 A

Catalog no.					
Standard	**W/ indicator**	**Vac**	**Amps**	**IR (kA)**	**Holder/block**
C10G0.5	—		0.5		
C10G1	—		1		
C10G2	—		2		
C10G4	—		4		
C10G6	—		6		
C10G8	—	500	8		
C10G10	—		10		
C10G12	—		12	120	CHM DIN-Rail*, BMM block
C10G16	—		16		
C10G20	—		20		
C10G25	—		25		
C10G32	—	400	32		
C10G32	—	400	32		
—	C10G321	500	32		
—	C10G40I	500	40		
—	C10G50I	400	50		

* Not recommended for use with indicator version.

14x51mm, Class gG, 400, 500 and 690 Vac, 1 to 50 A

Catalog no.					
Standard	**W/ striker**	**Vac**	**Amps**	**IR (kA)**	**Holder**
C14G1	—	690	1	80	
C14G2	—		2		
—	C14G2S	500		120	
C14G4	—	690	4	80	
—	C14G4S	500		120	
C14G6	—	690	6	80	
—	C14G6S	500		120	
C14G8	—	690	8	80	
—	C14G8S	500		120	
C14G10	—	690	10	80	
—	C14G10S	500		120	
C14G12	—	690	12	80	CH14 DIN-Rail**
—	C14G12S	500		120	
C14G16	—	690	16	80	
—	C14G16S	500		120	
C14G20	—	690	20	80	
—	C14G20S	500		120	
C14G25	—	690	25	80	
—	C14G25S				
C14G32	C14G32S	500	32	120	
C14G40	C14G40S		40		
C14G50	C14G50S	400	50		

**Not recommended for use with indicator version, use striker version to actuate optional, external microswitch

22x58mm, Class gG, 400, 500 and 690 Vac, 2 to 125 A

Catalog no.					
Standard	**W/ striker**	**Vac**	**Amps**	**IR (kA)**	**Holder/block**
C22G2	—		2		
C22G4	C22G4S		4		
C22G6	C22G6S		6		
C22G8	C22G8S		8		
C22G10	C22G10S		10		
C22G12	C22G12S		12		
C22G16	C22G16S	690	16	80	CH22 DIN-Rail*, JM70100 block
C22G20	C22G20S		20		
C22G25	C22G25S		25		
C22G32	C22G32S		32		
C22G40	C22G40S		40		
C22G50	C22G50S		50		
C22G63	C22G63S		63		
C22G80	C22G80S	500	80		
C22G100	C22G100S		100	120	
C22G125	C22G125S	400	125		

* Use striker version to actuate optional, external microswitch.

Dimensions — mm

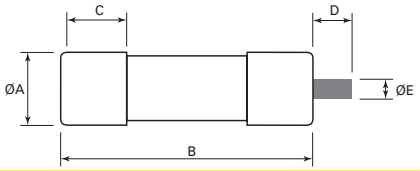

Catalog symbol	Ø A	B	C	Indicator/striker D	Indicator/striker Ø E
C10G	10	38	10	—	—
C14G	14.3	51	13	8	4
C22G	22	58	16	8	4

Data sheet no. 720115

Class aM IEC 60269 industrial ferrule fuses

10 to 22mm diameter IEC Class aM fuses with optional indicators (22x58mm only) and strikers. See catalog numbers for availability and ratings.

10x38mm, Class aM, 500 and 400 Vac, 0.25 to 25 A

Catalog no. Standard	Vac	Amps	IR (kA)	Holder/block
C10M0.5	500	0.5	120	CHM Din-Rail, BMM block
C10M1		1		
C10M2		2		
C10M4		4		
C10M6		6		
C10M8		8		
C10M10		10		
C10M12		12		
C10M16		16		
C10M20	400	20		
C10M25		25		

14x51mm, Class aM, 400, 500 and 690 Vac, 0.25 to 50 A

Catalog no. Standard	W/ striker	Vac	Amps	IR (kA)	Holder
C14M0.25	—	690	0.25		CH14 DIN-Rail**
C14M0.5	—		0.5		
C14M1	—		1	80	
C14M2	—		2	80	
—	C14M2S	500		120	
C14M4	—	690	4	80	
—	C14M4S	500		120	
C14M6	—	690	6	80	
—	C14M6S	500		120	
C14M8	—	690	8	80	
—	C14M8S	500		120	
C14M10	—	690	10	80	
—	C14M10S	500		120	
C14M12	—	690	12	80	
—	C14M12S	500		120	
C14M16	—	690	16	80	
—	C14M16S	500		120	
C14M20	—	690	20	80	
—	C14M20S	500		120	
C14M25	—	690	25	80	
—	C14M25S	500		120	
C14M32	C14M32S		32		
C14M40	C14M40S		40		
C14M50	C14M50S	400	50		

**Use striker version to actuate optional, external microswitch.

22x58mm, Class aM, 400, 500 and 690 Vac, 2 to 125 A

Catalog no. Standard	W/ indicator	W/ striker	Vac	Amps	IR (kA)	Holder/block
C22M2	—	—	690	2	80	CH22 DIN-Rail*, JM70100 block
C22M4	—	—		4		
C22M6	—	—		6		
C22M8	—	—		8		
C22M10	—	—		10		
C22M12	—	C22M12S		12		
C22M16	—	C22M16S		16		
C22M20	—	C22M20S		20		
C22M25	—	C22M25S		25		
C22M32	—	C22M32S		32		
C22M40	—	C22M40S		40		
C22M50	—	C22M50S		50		
C22M63	—	C22M63S		63		
C22M80	—	C22M80S	500	80	120	
C22M100	—	C22M100S		100		
C22M125	C22M125I	C22M125S	400	125		

* Not recommended for use with indicator version, use striker version to actuate optional, external microswitch.

Dimensions — mm

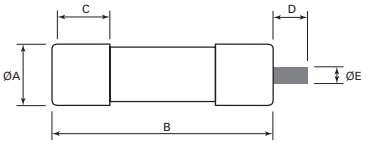

Catalog symbol	Ø A	B	C	Indicator/striker D	Indicator/striker Ø E
C10M	10	38	10	—	—
C14M	14.3	51	13	8	4
C22M	22	58	16	8	4

Data sheet no. 720115

HRC fuse holders

CAMaster

The Bussmann series CAMaster HRC fuse holder features a unique cam-action for easy fuse removal while allowing significantly improved contact pressure between fuse carrier and base contact that enhances electrical performance. A range of lockable safety carriers for the fuse holder (catalog reference LSC), are available.

Ratings

- Volts 690 V
- Amps up to 100 A

Agency information

- CSA C22.2 No. 39; IEC 269 and BS88, CE

Catalog no.	Amps	Details for	Fuses accepted
CM20CF	30	HRCI-CA applications	_CIF21
CM30CF	30		_H07C
CM60CF	60	HRCII applications	_K07C
CM100CF	100		_K07CR

Accessories

Catalog no.	Amps	Description	CAMaster accepted
20BS	30	Back stud	CM20CF
32BS	30		CM30CF
60/100BS	60/100		CM60/100CF
GLP	All	Ganging link kit	3-Pole
20LSC	30	Security carrier with clip	CM20CF
32LSCC	30		CM30CF
63/100LSC	60/100		CM60/100CF

SAFEloc

The Bussmann series SAFEloc HRC fuse holders (for use with HRCI-CB fuses) provides a positive, stress-free fuse fitting and locks it in position to ensure safe insertion and withdrawal from the base. Base contacts are fully shrouded to help protect against electric shock. Shrouds utilize simple slide/snap action allowing access to the contact terminal screws. It can be mounted on a 35mm DIN-Rail or panel-mounted with a single screw.

Ratings

- Volts 600 V
- Amps 30-60 A

Agency information

- Designed to accommodate the compact range of offset blade fuse to CSA C22.2 No. 106, HRCI-CB, CE

Catalog no.*	Amps	Connection	Fuses accepted
C30F	30	Front	_CIF06
C30BS		Back	
C30FBS		Front-back	
C60F	60	Front	EK-(amp)
C60BS		Back	
C60FBS		Front-back	

* For use with HRCI-CB fuses.

Bussmann series Red Spot fuse holders

These versatile CSA Certified and IP20 finger-safe fuse holders for BS88 HRC industrial fuses are available in ratings from 20 to 400 amps.

Padlock inserts, warning carriers and fuse adapter accessories enhance safety and application flexibility.

See data sheet no. 10083 for details.

BUSSMANN SERIES

Enhanced safety. Improved system reliability. Simplified inventory.

It's easier than ever to improve your circuit protection while efficiently reducing your fuse inventory.

Leveraging Bussmann™ series ultimate protection fuses, our Low-Peak™ Upgrade program couples the industry's most advanced circuit protection with our extensive knowledge to deliver enganced safety, improved system reliability and simplified inventory.

In just three simple steps, you'll save time and increase productivity. All by using Bussmann series Low-Peak fuses.

Three steps to ultimate protection:

1 Audit

2 Analyze

3 Implement

Visit Eaton.com/bussmannseries to learn more.

EATON
Powering Business Worldwide

Follow us on social media to get the latest product and support information.

Complete and reliable solar circuit protection

Contents

Description				Section page
Fuses	**Fuse size**	**Volts**	**Amps**	
PVM	13/32" x 1-1/2"	600	4-30	2
PVS-R	RK5	600	20-400	
PV-_A10_	10x38mm	1000	1-20	3
HPV	In-line assembly	1000/1500	1-20	4
PV-_A14F	14x51mm	1000/1100	15-32	
PV-_ANH_	NH1, 2, 3	1000	32-400	5
PV-_A10F85L	10x85mm	1500	2.25-25	6
PV15M-4A-CT	Crimp terminal	1500	4	
PV-_A-_XL	XL 01, 1, 2, 3	1000/1500	50-600	7
Holder	**Fuse size**	**Volts**	**Amps**	
CHPV_	10x38mm	1000	30	8
Blocks	**Fuse size**	**Volts**	**Amps**	
BPVM-_	10x38mm	1000	30	9
CHPV15L85	10x85 and 14x85mm	1500	32	10
SD_-S-PV	01XL to 3L	1500	Up to 630	
SD_-D-PV and TD_D-PV	NH1, 2, 3	1500	Up to 630	11

PVM 600 Vdc 13/32" x 1-1/2" midget PV fuses

A range of UL 248-19 fast-acting 600 Vdc 13/32" x 1-1/2" (10x38mm) midget fuses specifically designed to protect solar power systems in extreme ambient temperature, high cycling and low level fault current conditions (reverse current, multi-array fault).

RoHS 2011/65/EU

Ratings

- Volts 600 Vdc
- Amps 4-30 A
- IR 50 kA DC (4-30 A)

Agency information

- UL Listed 248-19, Guide JFGA, File E335324, CSA Component Certified C22.2, RoHS compliant, CE

Watts loss

		Power loss (watts)	
Catalog no.	**Amps**	**0.8 I_n**	**I_n**
PVM-10	10	1.0	1.9
PVM-15	15	1.0	1.7
PVM-30	30	1.6	2.9

Catalog no. (amps)			
PVM-4	PVM-7	PVM-10	PVM-20
PVM-5	PVM-8	PVM-12	PVM-25
PVM-6	PVM-9	PVM-15	PVM-30

Features

- Specifically designed to protect photovoltaic systems in extreme ambient temperature per UL 248-19 listed
- Capable of withstanding high cycling and low level fault current conditions

Typical applications

- Combiner boxes
- String protectors

Recommended fuse holders and blocks, see pages 6-8 and 6-9.

Data sheet no. 2153

PVS-R 600 Vac/dc Class RK5 PV fuse

A range of UL 248-19 fast-acting 600 Vdc Class RK5 fuses specifically designed to protect photovoltaic power systems in extreme ambient temperature, high cycling and low level fault current conditions (reverse current, multi-array fault).

Ratings

- Volts
  - 600 Vac to UL 248-12
  - 600 Vdc to UL 248-19
- Amps 20-400 A
- IR
  - 200 kA RMS Sym. AC
  - 20 kA DC (20-60 A)
  - 10 kA DC (70-400 A)

Agency information

- UL Listed, Std. 248-12, Class RK5, Guide JFGA, File E335324. Photovoltaic to UL 248-19, CSA Component Certified C22.2, CE

Catalog no. (amps)			
PVS-R-20	PVS-R-60	PVS-R-125	PVS-R-300
PVS-R-25	PVS-R-70	PVS-R-150	PVS-R-350
PVS-R-30	PVS-R-80	PVS-R-175	PVS-R-400
PVS-R-35	PVS-R-90	PVS-R-200	
PVS-R-40	PVS-R-100	PVS-R-225	
PVS-R-50	PVS-R-110	PVS-R-250	

Features

- Current limitation for non-inductive circuits provides Class RK5 current-limiting response to ground fault and short-circuit conditions
- Designed for the protection and isolation of photovoltaic systems

Typical applications

- Photovoltaic systems
- Inverters
- Photovoltaic system DC safety switches
- Recombiner boxes

Recommended fuse blocks, see page 8-19.

Data sheet no. 4203

PV 1000 Vdc 10x38mm PV fuses

A range 10x38mm, 1000 Vdc PV fuses for the protection and isolation of photovoltaic strings that are specifically designed for use in PV systems with extreme ambient temperature, high cycling and low fault current conditions (reverse current, multi-array fault) string arrays. For application flexibility, the PV 10x38mm fuse is available as a cylindrical fuse as well as bolt-on, single and dual PCB tab and in-line crimp terminal versions.

Ratings

- Volts 1000 Vdc
- Amps 1-20 A
- IR 50 kA

Terminals and conductors

- Crimp connection for single, 75°C/90°C Cu Stranded 12-8 AWG PV wire

Agency information

- UL Listed to 248-19†, Guide JFGA, File E335324, IEC 60269-6 (gPV), CSA File 53787, Class 1422-30 (1-15A), 20 A Pending, CCC (1-20 A), RoHS Compliant

† Except crimp terminal version that is UL Recognized to UL 248-19, Guide JFGA2, File E335324.

Features

- Meets UL and IEC photovoltaic standards for global acceptance
- Low watts loss performance for energy efficiency
- Low temperature rise performance for more precise sizing
- In-line crimp terminal version is easy to apply in wire harness construction

Typical applications

- Combiner boxes
- Inverters
- PV wire harnesses

Recommended fuse blocks, holders and fuseclips

- BPVM modular fuse block with optional cover, see page 6-9
- CHPV 1- and 2-pole modular fuse holders with optional open fuse indication, see page 6-8
- 1A3400-09 PCB fuseclip, see page 3-16
- HPV in-line fuse holder assembly, see page 6-4

Catalog no. (amp)						I^2t (A^2s)		Watts loss	
Cylindrical	Bolt-on	PCB single pin	PCB double pin	Crimp terminal	Amps	Pre-arcing	Total @rated volts	0.8 I_n	I_n
PV-1A10F	PV-1A10-T	PV-1A10-1P	PV-1A10-2P	PV-1A10F-CT	1	0.15	0.4	0.8	1.5
PV-2A10F	PV-2A10-T	PV-2A10-1P	PV-2A10-2P	PV-2A10F-CT	2	1.2	3.4	0.6	1.0
PV-3A10F	PV-3A10-T	PV-3A10-1P	PV-3A10-2P	PV31A10F-CT	3	4	11	0.8	1.3
PV-3-5A10F	PV-3-5A10-T	PV-3-5A10-1P	PV-3-5A10-2	PV-3.5A10F-CT	3.5	6.6	18	0.9	1.4
PV-4A10F	PV-4A10-T	PV-4A10-1P	PV-4A10-2P	PV-4A10F-CT	4	9.5	26	1.0	1.5
PV-5A10F	PV-5A10-T	PV-5A10-1P	PV-5A10-2P	PV-5A10F-CT	5	19	50	1.0	1.6
PV-6A10F	PV-6A10-T	PV-6A10-1P	PV-6A10-2P	PV-6A10F-CT	6	30	90	1.1	1.8
PV-8A10F	PV-8A10-T	PV-8A10-1P	PV-8A10-2P	PV-8A10F-CT	8	3	32	1.2	2.1
PV-10A10F	PV-10A10-T	PV-10A10-1P	PV-10A10-2P	PV-10A10F-CT	10	7	70	1.2	2.3
PV-12A10F	PV-12A10-T	PV-12A10-1P	PV-12A10-2P	PV-12A10F-CT	12	12	120	1.5	2.7
PV-15A10F	PV-15A10-T	PV-15A10-1P	PV-15A10-2P	PV-15A10F-CT	15	22	220	1.7	2.9
PV-20A10F	PV-20A10-T	PV-20A10-1P	PV-20A10-2P	PV-20A10F-CT	20	34	350	2.1	3.6

Data sheet no. 10121

HPV 1000 Vdc in-line PV fuse assembly

A single-pole, non-serviceable photovoltaic in-line fuse holder and fuse assembly in an IP67 dust tight, submersible insulating boot for use in photovoltaic wire harnesses.

RoHS 2011/65/EU

Ratings

- Volts
  - 1000 Vdc
  - 1500 Vdc (HPV-D15V-4A only)
- Amps 1-20 A
- IR 33 kA

Agency information

- UL Listed to 4248-1 and 4248-19, File E 348242, CSA Component Acceptance, Class 6225 30, File # 47235, IP67 submersible, RoHS compliant, CE

Terminals and conductors

- Crimp connection for single, 75°C/90°C Cu Stranded 12-8 AWG PV wire

Boot material

- UL 5VA flammability resistant rated elastomer, UV resistant to UL F1 suitable for outdoor use.

Operating and storage temperature range

- -40°C to +90°C

Packaging

- Bulk packed in cartons, 180 fuse assemblies per carton. Carton weight 19.3 lbs (8.7543 kg).
- Fuse assemblies poly bagged with PV fuse element, two insulating boots (for lineside and loadside), and one pressure sensitive label to be applied on outside after complete assembly to the wire harness.

Catalog no. (amps)*			
1000 Vdc			
HPV-DV-1A	HPV-DV-3.5A	HPV-DV-8A	HPV-DV-20A
HPV-DV-2A	HPV-DV-4A	HPV-DV-10A	
HPV-DV-2.5A	HPV-DV-5A	HPV-DV-12A	
HPV-DV-3A	HPV-DV-6A	HPV-DV-15A	
1500 Vdc			
HPV-D15V-4A			

* For PV-(amp)A10F-CT fuse specifications and derating curves see data sheet no. 10121 at Eaton.com/bussmannseries.

Recommended tools

- Sta-Kon™ terminal crimping tool, catalog no. ERG4002
- Multi-Contact assembly tool, catalog no, PV-RWZ with PV-KOI+II and PV-KOIII tapered spindles

PV 1000/1100 Vdc 14x51mm PV fuses

A range of 14x51mm PV fuses specifically designed for protecting and isolating photovoltaic strings. These fuses are capable of interrupting low overcurrents associated with faulted PV systems (reverse current, multi-array fault).

RoHS 2011/65/EU

Ratings

- Volts
  - 1000 Vdc (25 and 32 A)
  - 1100 Vdc (15 and 20 A)
- Amps 15-32 A
- IR 10 kA

Agency information

- UL Listed, Guide JFGA, File E335324. Photovoltaic to, UL 248-19, IEC 60269-6 gPV, CSA Pending, CCC Pending, RoHS compliant

		I^2t (A^2s)		Watts loss	
Catalog no.	**Amps**	**Pre-arcing**	**Total @ rated volts**	**0.8 I_n**	**I_n**
PV-15A14F	15	14	265	2.1	4
PV-20A14F	20	27	568	2.7	5
PV-25A14F	25	65	943	2.7	5.1
PV-32A14F	32	120	1740	3.3	6.2

Features

- Specifically designed to provide fast-acting protection under low fault current conditions associated with PV systems
- High DC voltage rating
- Demonstrated performance in extreme temperature cycling conditions

Typical applications

- Combiner boxes
- Inverters

Recommended fuse holder

- CH141B-PV DIN-Rail modular fuse holder, see data sheet no. 720148 for more information.

Data sheet no.: 2157

Data sheet no. 720132

NH 1000 Vdc blade and bolt-on PV fuses

A range of 1000 Vdc NH size Photovoltaic (PV) fuses specifically designed for protecting and isolating array combiners/ re-combiners, disconnects and inverters.

RoHS 2011/65/EU

Ratings

- Volts 1000 Vdc
- Amps 32-400 A
- IR 50 kA

Agency information

- UL Listed, Guide JFGA, File E335324, Photovoltaic to UL 248-19, IEC 60269-6 gPV, CSA Class 1422-30, File 53787 (32-160 A), UL Listed, IEC gPV, CSA, CCC Pending, RoHS compliant

Features

- Compact size saves panel space and extends design flexibility
- Bolt-on versions have common hole centers for standardizing busbar designs across 63-400 amp range
- Low power loss for greater efficiency and lower operating temperature
- Global agency standards simplifies design considerations for worldwide markets
- Dual indication feature and optional microswitches make system monitoring easier

Typical applications

- Recombiner boxes
- Inverters

Recommended fuse blocks

- SD_ and TD_, see page 6-11

Optional microswitches†

Catalog no.	Tab size - mm (inch)	Connection	Volts	Amps
170H0236	250/6.3 (1/4)	Quick connect	250	2
170H0238	110/2.8 (0.11)			2
BVL50	187/4.8 (3/16)			6

† For use with bladed version.

Catalog no.	NH size	Amps	I^2t (A^2S) Pre-arcing	I^2t (A^2S) Total @ 1000V	Watts loss 0.8 I_n	Watts loss I_n
Blade versions						
PV-32ANH1	1	32	80	720	4	8
PV-40ANH1		40	185	1670	5	9
PV-50ANH1		50	400	3600	6	11
PV-63ANH1		63	470	4300	6	12
PV-80ANH1		80	640	5760	8	15
PV-100ANH1		100	1300	11,700	8	16
PV-125ANH1		125	2600	23,400	9	17
PV-160ANH1		160	5200	46,800	14	27
PV-200ANH1		200	10,200	82,000	13	25
PV-250ANH2	2	250	17,000	136,000	19	38
PV-300ANH3	3	300	32,000	260,000	24	40
PV-315ANH3		315	32,000	260,000	26	44
PV-350ANH3		350	44,500	370,000	27	45
PV-355ANH3		355	44,500	370,000	28	46
PV-400ANH3		400	67,500	550,000	30	50
Bolt-on versions						
PV-63ANH1-B	1	63	470	4300	6	12
PV-80ANH1-B		80	640	5760	8	15
PV-100ANH1-B		100	1300	11,700	8	16
PV-125ANH1-B		125	2600	23,400	9	17
PV-160ANH1-B		160	5200	46,800	14	27
PV-200ANH1-B		200	10,200	82,000	13	25
PV-250ANH2-B	2	250	17,000	136,000	19	38
PV-315ANH3-B	3	315	32,000	260,000	26	44
PV-355ANH3-B		355	38,000	310,000	29	48
PV-400ANH3-B		400	61,000	490,000	32	50

Blade versions mount in fuse blocks

Bolt-on versions mount directly to busbas and conductor terminals

PV 1500 Vdc 10x85mm PV fuses

A range of 10x85mm PV fuses specifically designed for protecting and isolating photovoltaic strings. These fuse links are capable of interrupting low overcurrents associated with faulted PV systems (reverse current, multi-array fault).

Mounts in Bussmann series CHPV15L85 DIN-Rail holder. See page 6-10.

RoHS 2011/65/EU

Ratings

- Volts 1500 Vdc
- Amps 2.25-30 A
- IR 30 kA, 1 ms

Operating class

- gPV

Agency information

- UL 248-19
- IEC 60269
- RoHS compliant

Features

- Designed for fast-acting protection under low fault current conditions associated with PV systems
- UL and IEC photovoltaic standards for global product acceptance
- Low watts loss for greater PV system efficiency

Typical applications

- Combiner boxes, wire harnesses

		I^2t (A^2s)		Watts loss (W)	
Catalog no.	**Amps**	**Pre-arcing**	**Total at 1500 Vdc**	**0.8 I_n**	**I_n**
PV-2.25A10F85L	2.25	3	10	1.4	2.4
PV-2.5A10F85L	2.5	4	10	1.3	2.1
PV-3A10F85L	3	7	20	1.3	2.2
PV-3-5A10F85L	3.5	10	20	1.6	2.6
PV-4A10F85L	4	15	30	1.7	2.8
PV-5A10F85L	5	33	60	1.7	2.8
PV-12A10F85L	12	19	240	2.1	3.5
PV-15A10F85L	15	42	300	2.2	3.6
PV-16A10F85L	16	48	350	2.1	3.5
PV-20A10F85L	20	108	800	2.7	4.5
PV-25A10F85L	25	190	1400	3.4	5.6
PV-30A10F85L	30	268	1090	4.0	6.6

Data sheet no. 10658

PV15M-4A-CT 1500 Vdc in-line PV fuse with crimp terminals

Bussmann series PV15M-4A-CT is a 1500 Vdc in-line photovoltaic fuse with crimp terminals for use in wire harnesses and other applications where an in-line PV fuse is desirable.

This in-line fuse can be electrically insulated with customer-supplied overmolding or approved heat-shrink.

RoHS 2011/65/EU

Ratings

- Volts 1500 Vdc
- Amps 4 A
- IR 15 kA DC
- Time constant 3 ms max.

Agency information

- UL Recognized, 248-19, File E484317 Vol. 1 Sec. 1, CSA pending, RoHS compliant

Catalog number

- PV15M-4A-CT

Conductor

- Single PV stranded 75/90°C Cu

Operating temperature range

-40°C to 90°C

Materials

- Copper terminals with ceramic fuse body

Features

- Crimp terminals eliminate the need for a fuse holder or block
- 1500 Vdc rating is ideally suited for today's efficient, higher-voltage PV systems

Recommended tools

Sta-Kon® terminal crimping tool, catalog no. ERG4002

Data sheet no. 10639

XL 1000 Vdc and 1500 Vdc PV fuses

A range of XL size PV fuses specifically designed for protecting and isolating photovoltaic array combiners and disconnects. These fuses are capable of interrupting low overcurrents associated with faulted PV systems (reverse current, multi-array fault). Optional microswitches available for use in monitoring systems.

Ratings

- Volts
  - 1000 Vdc (63-600 A)
  - 1500 Vdc (50-500 A)
- Amps (see table)
- IR (see table)

Agency information

- UL 248-19, Guide JFGA, File E335324, IEC 60269-6 gPV, CSA Class 1422-30, File 53787, RoHS Compliant

Features

- High DC voltage rating with fast-acting protection under low fault current conditions for PV systems
- Blade or bolt-on mounting for application flexibility
- Demonstrated performance in extreme temperature cycling conditions

Typical applications

- Recombiner boxes, Inverters

Recommended fuse blocks

- SD_-S-PV blocks, see page 6-10

Optional microswitches

- Blade: 170H0235 or 170H0237 for size 01XL, 70H0236 or 170H0238 for sizes 1XL, 2XL and 3L
- Bolt-on: 170H0069 for all sizes

XL size	Catalog no. Bladed version	Catalog no. Bolt-on version	Amps	IR (kA)	I^2t (A^2s) Pre-arcing	I^2t (A^2s) Total @ rated volts	Watts loss $0.8I_n$	Watts loss I_n
1000 Vdc								
01	PV-63A-01XL	PV-63A-01XL-B	63	50	260	1900	13	24
	PV-80A-01XL	PV-80A-01XL-B	80	50	490	3600	17	29
	PV-100A-01XL	PV-100A-01XL-B	100	50	870	6300	18	32
	PV-125A-01XL	PV-125A-01XL-B	125	50	1930	13,900	20	40
	PV-160A-01XL	PV-160A-01XL-B	160	50	3900	28,100	22	44
1	PV-200A-1XL	PV-200A-1XL-B	200	33	9400	27,260	31	60
2	PV-160A-2XL	PV-160A-2XL-B	160	33	2780	21,000	25	44
	PV-200A-2XL	PV-200A-2XL-B	200	33	4950	37,000	28	50
	PV-250A-2XL	PV-250A-2XL-B	250	33	9450	70,000	34	60
	PV-315A-2XL	PV-315A-2XL-B	315	33	16,600	123,000	40	66
	PV-355A-2XL	PV-355A-2XL-B	355	33	26,000	192,000	42	68
	—	PV-160A-2XL-3B*	160	33	2780	21,000	25	44
	—	PV-200A-2XL-3B*	200	33	4950	37,000	28	50
	—	PV-250A-2XL-3B*	250	33	9450	70,000	34	60
	—	PV-315A-2XL-3B*	315	33	16,600	123,000	40	66
	—	PV-355A-2XL-3B*	355	33	26,000	192,000	42	68
3	PV-350A-3L	PV-350A-3L-B	350	50	31,000	161,200	40	65
	PV-400A-3L	PV-400A-3L-B	400	50	44,500	231,400	48	82
	PV-500A-3L	PV-500A-3L-B	500	50	85,000	442,000	50	85
	PV-600A-3L	PV-600A-3L-B	600	50	137,000	712,400	80	108
1500 Vdc								
01	PV-50A-01XL-15	PV-50A-01XL-B-15	50	30	175	1000	14	25
	PV-63A-01XL-15	PV-63A-01XL-B-15	63	30	362	2250	15	26
	PV-80A-01XL-15	PV-80A-01XL-B-15	80	30	565	3300	19	35
	PV-100A-01XL-15	PV-100A-01XL-B-15	100	30	1100	6600	22	40
	PV-125A-01XL-15	PV-125A-01XL-B-15	125	30	2200	10500	23	42
	PV-160A-01XL-12	PV-160A-01XL-B-12	160	30	5000	24000	26	52
1	PV-100A-1XL-15	PV-100A-1XL-B-15	100	30	1250	6000	24	43
	PV-125A-1XL-15	PV-125A-1XL-B-15	125	30	1950	9360	25	52
	PV-160A-1XL-15	PV-160A-1XL-B-15	160	30	4200	20,160	30	58
	PV-200A-1XL-15	PV-200A-1XL-B-15	200	30	9400	45,120	31	61
2	PV-125A-2XL-15	PV-125A-2XL-B-15	125	30	2200	15,000	25	44
	PV-160A-2XL-15	PV-160A-2XL-B-15	160	30	5000	32,000	29	48
	PV-200A-2XL-15	PV-200A-2XL-B-15	200	30	8800	51,000	32	57
	PV-250A-2XL-15	PV-250A-2XL-B-15	250	30	16,600	85,000	40	70
	—	PV-125A-2XL-3B-15*	125	30	2200	15,000	25	44
	—	PV-160A-2XL-3B-15*	160	30	5000	32,000	29	48
	—	PV-200A-2XL-3B-15*	200	30	8800	51,000	32	57
	—	PV-250A-2XL-3B-15*	250	30	16,600	85,000	40	70
3	PV-250A-3L-15	PV-250A-3L-B-15	250	100	74,000	263,000	28	49
	PV-315A-3L-15	PV-315A-3L-B-15	315	100	150,000	533,000	30	52
	PV-350A-3L-15	PV-350A-3L-B-15	350	100	195,000	693,000	34	59
	PV-355A-3L-15	PV-355A-3L-B-15	355	100	195,000	693,000	34	59
	PV-400A-3L-15	PV-400A-3L-B-15	400	100	296,000	1,060,000	35	61
	PV-450A-3L-15	PV-450A-3L-B-15	450	100	412,000	1,470,000	39	67
	PV-500A-3L-15	PV-500A-3L-B-15	500	100	532,000	1,890,000	42	73

* These fuses have revised bolting patterns that are identical to size 3L bolting pattern to allow using both size 2XL and size 3L fuses without changing the dimensional layout of the inverter, combiners and disconnects.

Data sheet no. 10201

CHPV Modular, IP20 finger-safe DIN-Rail holders for 10x38mm fuses

Bussmann series CHPV DIN-Rail fuse holders are for 10x38mm IEC and UL photovoltaic fuses rated up to 1000 Vdc. They are available with and without indication in 1- and 2-pole IP20 finger-safe versions. A variety of accessories extends their application flexibility and they may be ganged together to meet specific application requirements.

RoHS 2011/65/EU

Ratings

- Volts 1000 Vdc (or less)
- Amps 30 A
- SCCR 33 kA DC

Agency information

- UL Listed to 4248-19, Guide IZMR, File E348242
- CSA, Class 6225-30, File 47235
- IEC 60269-2
- CCC
- RoHS compliant
- CE

Mounting 35mm DIN-Rail

Wire range - AWG (mm²)

- 75°C and 90°C* Cu
- 18-4 (0.8-21.1)
- Solid, stranded, fine stranded

* May be used with higher temperature rated conductors with appropriate derating.

Terminals

- Single or dual conductors
- Comb busbar

Torque 30 lb-in (3.4 N•m) maximum

Flammability UL 94V0, self-extinguishing

Storage and operating temperature

- -4°F (-20°C) to 194°F (90°C) indicating
- -4°F (-20°C) to 248°F (120°C) non-indicating

Features

- Enhanced safety with IP20 finger-safe construction
- Wiring flexibility with terminals rated for use with 75°C or 90°C solid, stranded and fine stranded wire, and spade terminals and comb busbars. (Use any higher temperature insulations at the 90°C ampacity with appropriate derating.)
- Complete range of UL Listed and high SCCR rated one- and three-phase finger-safe comb busbars and power feed lugs

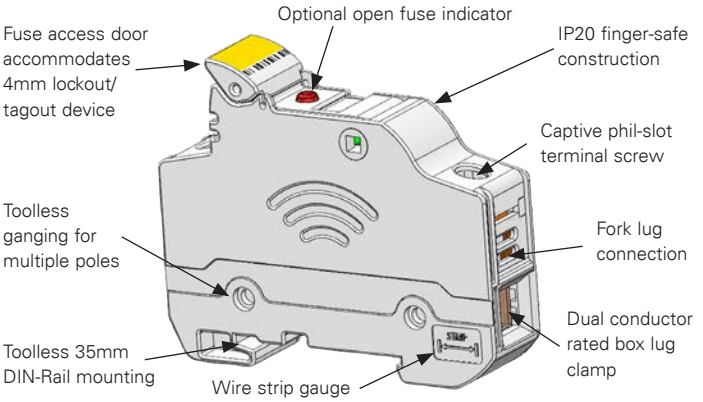

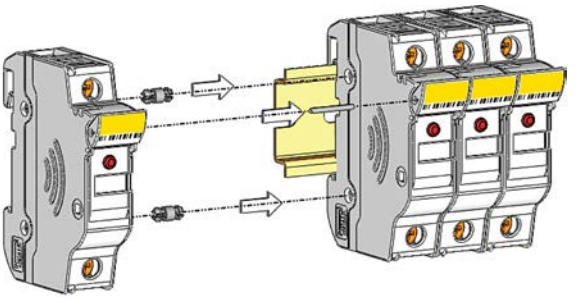

Gang multiple poles to meet application requirements using kit catalog number **JV-L** (gangs up to four poles).

Catalog no. With indication*	Catalog no. Without indication	Volts / amps	Agency marks	Poles	SCCR	Recommended Bussmann series fuses
CHPV1IU	CHPV1U	1000 Vdc/30 A	UL, CSA, , UL 4248-18, IEC 60269-1, CCC	1	33 kA DC	PV-(amp)A10F, PV10M-(amp)
CHPV2IU	CHPV2U			2		

* All models require 90 V minimum for illumination.

Data sheet no. 10430

BPVM modular blocks for 10x38mm fuses

The Bussmann series BPVM modular style 1000 Vdc fuse blocks for use with 10x38mm (13/32" x 1-1/2") photovoltaic fuses up to 30 amps contain multiple features to add versatility, reduce labor and enhance safety of any panel design. Optional IP20 finger-safe covers enhance safety with a lockout/tagout feature along with optional open fuse indication to speed troubleshooting.

BPVM-2C with CVRI-CCM covers

Ratings

- Volts 1000 Vdc
- Amps 30 A
- SCCR 33 kA

Agency information

- Blocks
  - UL Listed, Guide IZMR, File E348242
  - CSA Component Acceptance, Class 6225-01, File 47235
  - RoHS compliant
  - CE
- Covers
  - Covers are included in the overall UL Listing and CSA Acceptance
  - IP20 finger-safe
  - RoHS Compliant

Poles

- 1-, 2-pole units factory assembled
- Single-pole units snap together to create desired number of poles

Flammability ratings

- Blocks — UL 94V0, self-extinguishing
- Covers — UL 94HB, self-extinguishing

Operating and storage temperature range

- Blocks -40°C to +120°C
- Non-Indicating covers -40°C to +120°C
- Indicating covers -20°C to +90°C*

* Indication requires minimum 90 Vac/dc and closed circuit to illuminate.

Recommended Bussmann series fuses

- 10x38mm PV fuses
- Fast-acting 600 Vdc PVM fuses
- Class gPV 1000 Vdc PV fuses

Recommended DIN-Rail end stops

- Catalog no. BRKT-ND or BRKT-NDSCRW2

Features

- Available in 1- and 2-pole configurations to meet stocking requirements
- Blocks are fully modular with a snap-together design that provides tool-less assembly of multiple pole blocks at point-of-use to reduce inventory and save assembly time and labor
- DIN-Rail and panel mount versatility allows one product to be used for multiple applications, lowering inventory cost
- Compact footprint consumes minimal panel space
- Optional see-through cover enhances safety with IP20 finger-safe protection, lockout/tagout capability and open circuit indication
- Easy circuit identification with available universal marker labels for fuse block covers
- Tin-plated bimetallic copper fuse clips deliver superior fatigue resistance compared to traditional spring brass
- Listed to UL 4248-18 for photovoltaic application

Terminal specifications for 75/90°C Cu and Al wire

Terminal type	AWG range	Torque lb-in (N•m)
Box lug ("CR" Option)	Cu 2-14, Al 2-8	Cu 2-3 — 50 (5.6)
		Cu 4-6 — 45 (5.1)
		Cu 8-14 — 35 (4.0)
		Al 2-6 — 50 (5.6)
		Al 8 — 40 (4.5)
Screw (S)	Cu 10-18	10-18 — 20 (2.3)

Catalog no.			
Terminal type			
#10-32 Phil-slot screw	Box lug	Poles	Fuse size/class
BPVM-1S	BPVM-1C	1	10x38mm (13/32" x 1-1/2") gPV and PV
BPVM-2S	BPVM-2C	2	

Recommended covers*

Cover part numbers	
Indicating	Non indicating
CVRI-CCM	CVR-CCM

* For use with 4 AWG max conductors.

Data sheet no. 10265

CHPV15L85 holder for 10x85mm and 14x85mm fuses

CHPV15L85 fuse holder can be used with 10x85mm and 14x85mm cylindrical gPV fuses.

The unique design offers a high degree of safety with no possibility of any accidental contact with live parts during fuse replacement. When the fuse carrier is extracted, it continues to cover the live parts.

RoHS 2011/65/EU

Ratings

- Volts 1500 Vdc
- Amps 32 A (UL and IEC)
- SCCR 50 kA
- Impulse withstand U_{imp} 12 kV (tested at 18.5 kV)

Agency information

- cULus 4248-1 Edition 1, File E384242
- cULus 4248-19 Edition 1, File E14853
- IEC 60269-1
- RoHS compliant

Poles 1

Fuse rated power dissipation

- Up to 8.5 W max

Protection level

- IP20

Storage and operating temperature range

- Minimum permitted ambient temperature: -40°C (installation only at temperatures > -5°C). Service conditions as per IEC 61439-1, maximum pollution degree 3.

Mounting

- 35mm DIN-Rail

Terminals

- Box terminal, Cu 4-10mm² flexible, directly clamped or with wire-end ferrules (flexible + wire-end ferrule may not be possible with maximum cross-section)

To order

- Specify catalog number **CHPV15L85**

Features

- Global accreditation
- 32 amp current rating for UL and IEC

Compatible Bussmann series fuses

- PV-xA10F85 10x85mm fuses
- PV-xxA14LF10F 14x85mm fuses

Data sheet no. 10628

SD blocks for XL size PV fuses

SD XL PV fuse blocks are available with integral shields specifically designed to be fitted with Bussmann series XL photovoltaic fuses (see data sheet 10201).

Ratings

- Volts 1500 Vdc
- Amps
  - 250 A
  - 400 A
  - 630 A

RoHS 2011/65/EU

Agency information

- IEC 60269-1
- UL Listed, File E348242
- RoHS complaint

Poles

- 1
- **Power acceptance**
- Sizes 01XL and 1XL: 56 W
- Size 2XL: 70 W
- Size 3L: 96 W

Protection level

- IP20 with terminal covers and gripping lug cover in place and shielding of any exposed part of the terminal lugs

Operating temperature range

- -45°C to 80°C (with fuse derating above 40°C)

Mounting

- Panel

UL94 Flammability rating

- Block V-2
- Terminal cover V-0

Catalog no.	Description	XL fuse size	Amps
SD1XL-S-PV	1-pole PV fuse block	01XL and 1XL	250
SD2XL-S-PV		2XL	400
SD3L-S-PV		3L	630

Accessory

Catalog no.	Description
FEH1500	Fuse extraction handle available for sizes 01XL to 3L

Data sheet no. 10066

SD and TD blocks for NH size PV fuses

SD PV fuse blocks for NH fuse sizes 1 to 3 NH are available in 1- and 3-pole versions and are specifically designed for use with Bussmann series bladed NH photovoltaic fuses (see data sheet 720133).

Ratings

- Volts
  - 1500 Vdc (IEC)
- Amps
  - 250 A (SD1)
  - 400 A (SD2)
  - 630 A (SD3)
- SCCR 50 kA

Agency information

- IEC 60269-1
- UL Listed, File E348242
- CSA File 47235
- RoHS compliant

Poles

- 1 and 3

Power acceptance

- SD1 - 32 W
- SD2 - 45 W
- SD3 - 60 W

Protection level

- IEC - IP20 with shroud kit installed and shielding of any exposed terminal lugs
- UL - Installation of shroud kit decreases the likelihood of incidental terminal contact. To ensure compliance to IP20 specifications per UL the installer must make additional provisions.

Operating temperature range

- IEC Standards -20°C to 70°C
- UL -20°C to 90°C Max*

* Dependant upon rating of customer supplied lugs.

Storage temperature range

- IEC and UL -40°C to 90°C

Mounting

- 35mm DIN-Rail
- Panel

RoHS 2011/65/EU

Shown with optional shroud kit

Flammability rating

- UL 94V0

Catalog no.	Poles	Description	NH fuse size	Amps
SD1--D-PV	1	NH PV fuse block	1	250
TD1--D-PV	3			
SD2-D-PV	1		2	400
TD2-D-PV	3			
SD3-D-PV	1		3	630
TD3-D-PV	3			

Accessories

Fuse extraction handle

Catalog no.	Size	Amps
FEH	NH1 to 3	250 to 630

Shroud kits

Catalog no.*	Fuse block	Fuse size	Amps	Description
SD12-SK	SD1 and TD1	NH1	250	Includes 2 shrouds and 1 fuse cover
SD12-SK	SD2 and TD2	NH2	400	
SD3-SK	SD3 and TD3	NH3	630	

* Order one kit per pole.

Phase barrier kits

Catalog no.†	Fuse block	Fuse size	Amps	Description
SD12-PB	SD1 and TD1	NH1	250	2 phase barriers and 2 ganging links
SD12-PB	SD2 and TD2	NH2	400	
SD3-PB	SD3 and TD3	NH3	630	

† Order one kit per pole.

Microswitches

Catalog no.	Ratings
BVL50	6 A 250 Vac
170H0236	2 A 250 Vac
170H0238	2 A 250 Vac

Neutral links

Catalog no.	Fuse block	Fuse size	Amps
SDL-1	SD1 and TD1	NH1	250
SDL-2	SD2 and TD2	NH2	400
SDL-3	SD3 and TD3	NH3	630

BUSSMANN
SERIES

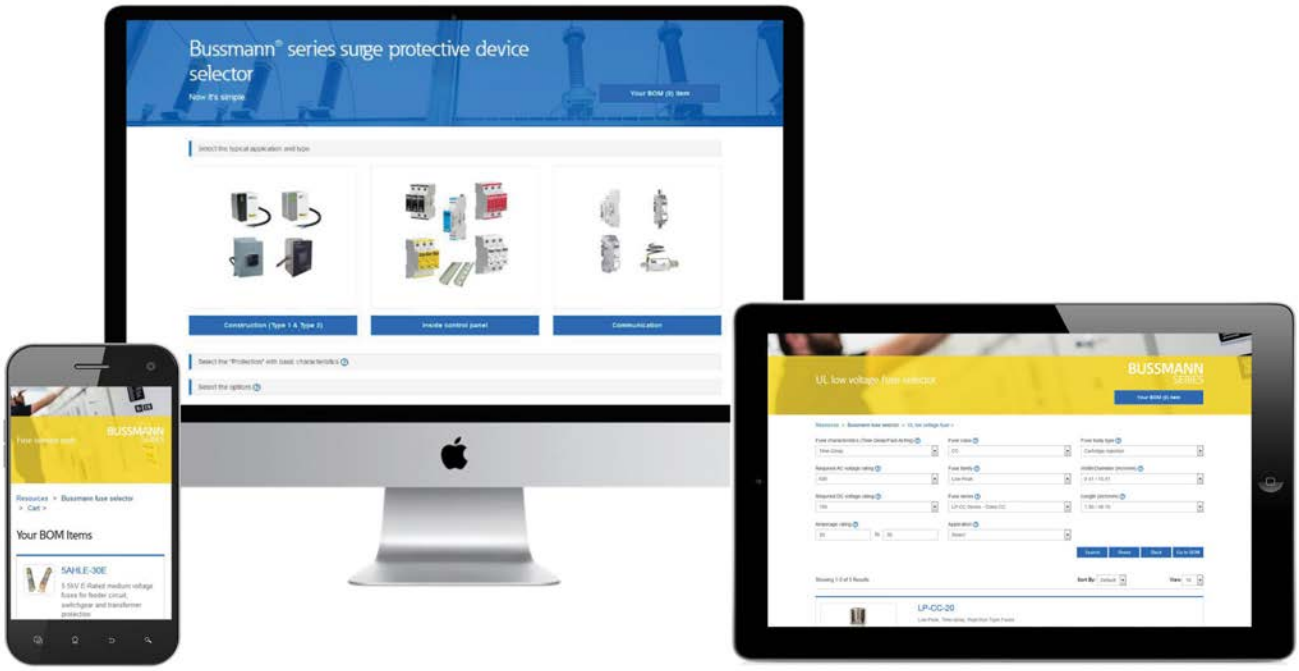

Bussmann series products at your fingertips

We make searching for and selecting Bussmann™ series products easy with four unique product selector tools:

Surge Protective Device Selector
Low Voltage Fuses Selector
Medium Voltage Fuse Selector
Connector Selector

Each tool allows you to select from available attributes to find the product that best meets your needs. Results are then displayed with links to product detail webpages for more information. Quick access to our team of experts for additional assistance is also made available. And with a responsive design, the tools can be used anytime, anywhere.

Find these selector tools and more at **toolbox.bussmann.com**.

EATON
Powering Business Worldwide

Follow us on social media to get the latest product and support information.

A fusible solution for virtually every medium voltage application

Bussmann series E-Rated, R-Rated and PT medium voltage fuses

Contents

Description	Section page
Introduction	**2**
E-Rated current-limiting	
2.75 kV	3-4
5.5 kV	5-7
5.5 kV specialty mount	8-10
8.3 kV	11-12
8.3 kV specialty mount	13-14
15.5 kV	15-17
15.5 kV specialty mount	18-19
DIN E-Rated current-limiting — 5.5-38 kV	20-21
R-Rated current-limiting	
2.4 kV	22
4.8 kV	23-24
7.2 kV	25
PT E-Rated current-limiting — 2.475-38 kV	26-29
PT fast-acting current-limiting	30
British IEC	31
DIN IEC	32
Expulsion fuse links	33
EEI-NEMA Type K and T – Type H and N	34
PT fuse mountings	35
Recommended fuseclips	36

Introduction

Worldwide circuit protection solutions

Eaton is the world-leading supplier of Bussmann series medium voltage fuses. Each product is backed by an efficient worldwide distribution network with unrivaled service and technical support. Eaton circuit protection solutions comply with major international standards: ANSI, BS, DIN, IEC and UL.

Fuse types

Medium voltage fuses generally fit into two categories – expulsion fuses and current limiting. The definitions per ANSI C37.40 are:

Expulsion fuse: A vented fuse in which the expulsion effect of the gases produced by internal arcing, either alone or aided by other mechanisms results in current interruption. Expulsion fuses will limit the duration of an overcurrent event, but they will not limit the magnitude of fault current.

Current-limiting fuse: A fuse unit that, when in its current-responsive element is melted by a current within the fuse's specified current-limiting range, abruptly introduces a high resistance to reduce current magnitude and duration, resulting in subsequent current interruption. A current limiting fuse will reduce the magnitude a fault current as well as limit the duration of the overcurrent event when operating in its current limiting range. Eaton offers a broad range of current limiting fuses for protection of feeders, transformers and motor circuits designed to ANSI, BS, DIN and IEC standards.

Medium voltage current-limiting fuses

Current-limiting fuses are classified into three categories:

1. **Full range** – defined by ANSI C37.40 as "a fuse capable of interrupting all currents from the maximum rated interrupting current down to the minimum continuous current that causes the melting of the fusible element(s), when the fuse is applied at the maximum ambient temperature specified by the manufacturer." It is able to interrupt any current that will melt its element.
2. **General purpose** – defined by ANSI C37.40 as "a fuse capable of interrupting all currents from the maximum rated interrupting current down to the current that causes melting of the fusible element(s) in one hour." Not all currents fall within this range. It is possible for the fuse to be exposed to an overcurrent lower than the value given by the one hour criteria. In that case, a different overcurrent protection device would be required to interrupt the overcurrent.
3. **Back-up** – defined by ANSI C37.40 as "a fuse capable of interrupting all currents from the maximum interrupting rating current down to the minimum interrupting current." The minimum interrupting current is the lowest current that the fuse will be able to clear properly. This creates a need to place a low current interrupting device, such as motor overloads, in series with the back-up rated fuse.

E- and R-Rated fuses

In North America, current limiting fuses typically fall into the category of E-Rated fuses and R-Rated fuses. Eaton also offers a wide range of Bussmann series current limiting fuses designed to BS, DIN and IEC standards.

E-Rated fuses are used to protect feeder circuits, power transformers and potential transformers. E-Rated fuses have defined current response times specified by ANSI C37.46. E-Rated fuses 100 amps and below must melt in 300 seconds at an RMS current within the range of 200 to 240 percent of the continuous current rating. E-Rated fuses above 100 amps must melt in 600 seconds at an RMS current within the range of 220 to 264 percent of the continuous current rating of the fuse. Eaton offers a wide variety of full range and general purpose E-Rated fuses from 2.4 to 38 kV.

R-Rated fuses are back-up fuses that provide short-circuit protection for motor circuits. They are applied with medium voltage motor starters which provide the overload protection for the circuit. R-Rated fuses also have defined current response times specified by ANSI C37.46. R-Rated fuses will melt in a range of 15 to 35 seconds at a current equal to 100 times the "R" rating. Bussmann series R-Rated fuses for motor circuit protection are available in voltage ratings from 2.4 to 8.3 kV

2.75 kV E-Rated medium voltage ferrule fuses

Catalog symbols

- 2CLE-_E
- JCX-_E

Ratings

- Volts 2.75 kV
- Amps 10 to 450 A
- Interrupting ratings
  - 50 kA RMS Sym. (2CLE-_E)
  - 40 kA RMS Sym. (JCX-_E)

Agency information

- E-Rated fuses meet the performance characteristics of ANSI C37.46

Dimensions — in (mm)

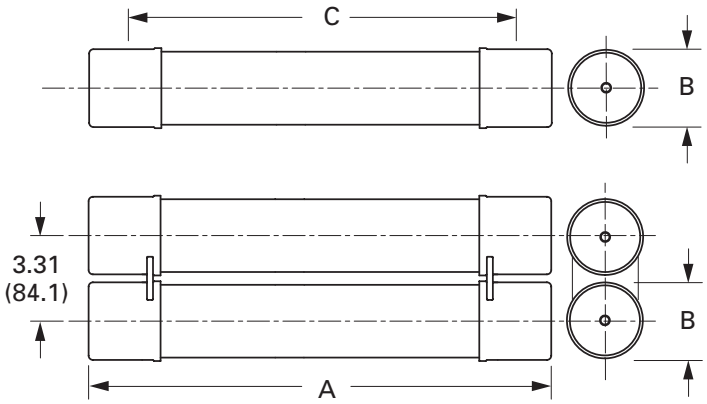

Recommended CLE fuse holders

Amps	Fuse mounting type	BIL (kV)	Approx. dimensions — in (mm) Diameter A	Clip center B	Length C	Catalog no. Mounting* Porcelain insulator	Glass-polyester insulator	Live parts (with end fittings)	End fittings (disconnect only)
CLE									
15E–25E Single barrel	Non-disconnect	60	2 (51)	8.1 (206)	9.5 (241)	2CLE-PNM-C	2CLE-GNM-C	CLE-NL-C	—
	Disconnect†					2CLE-PDM-C	2CLE-GDM-C	CLE-DL-C	CLE-DF-C
10E–225E Single barrel	Non-disconnect		3 (76)	7 (178)	10.9 (277)	2CLE-PNM-D	2CLE-GNM-D	CLE-NL-D	—
	Disconnect†					2CLE-PDM-D	2CLE-GDM-D	CLE-DL-D	CLE-DF-D
250E–300E 350X-450X Double barrel	Non-disconnect					2CLE-PNM-E	2CLE-GNM-E	CLE-NL-E	—
	Disconnect†					2CLE-PDM-E	2CLE-GDM-E	CLE-DL-E	CLE-DF-E

* Includes live parts and end fittings, end fittings supplied only when required.
† Disconnect mountings provide a means for fuse extraction only. Do not use a disconnect mounting for load switching or fuse removal while energized.

Recommended fuseclips

Description	Fuse dia. — in (mm)	Catalog no.
Enclosed fuseclip	2 (51)	A3354710*
	3 (76)	A3354730*
Open fuseclip		1A0065
Spring loaded open fuseclip		9078A67G04

* For single barrel applications only. Not sold in pairs.

CLE and JCX

Amps	Dimensions — in (mm) Length A	Diameter B	Clip centers C	IR RMS Sym. (kA)	No. of barrels	Installation location	Catalog no.
1	9.2 (234)	2 (51)	7 (178)	40		Indoor/outdoor	JCX-1E
2							JCX-2E
3							JCX-3E
5							JCX-5E
7							JCX-7E
10							JCX-10E
10	10.9 (277)	3 (76)		50	1	Indoor	2CLE-10E
15	9.5 (241)	2 (51)	8.1 (206)				2CLE-15E
20							2CLE-20E
25							2CLE-25E
30	10.9 (277)	3 (76)	7 (178)				2CLE-30E
40							2CLE-40E
50							2CLE-50E
65							2CLE-65E
80							2CLE-80E
100							2CLE-100E
125							2CLE-125E
150							2CLE-150E
200							2CLE-200E
225							2CLE-225E
250*					2		2CLE-250E
300*							2CLE-300E
350**							2CLE-350X
400**							2CLE-400X
450**							2CLE-450X

* 250 and 300 amp ratings may also be applied at 280 and 325 amps respectively, but fuses will no longer be complaint with ANSI E rating criteria.
**Does not comply with ANSI C37.46 for "E" rating.

Data sheet no. 10350

5.5 kV E-Rated medium voltage ferrule fuses

Catalog symbols

- General purpose
  - 5CLE-_E-D (10-25 A)
  - 5CLE-_E (10-1350 A)
  - 5HLE-_E (10-450 A)
  - JCY-_E (1-25 A)
- Full range (per ANSI C37.40)
  - MV055F_ (10-450 A)

Ratings*

- Volts 5.5 kV
- Amps 1 to 1350 A
- Interrupting ratings 40 to 63 kA RMS Sym.

* See catalog number tables for voltages, ampacities and interrupting ratings by catalog number.

Agency information

- E-Rated fuses meet the performance characteristics of ANSI C37.46
- UL Listed, Guide JEEG, File E240398. See catalog numbers.

Dimensions — in (mm)

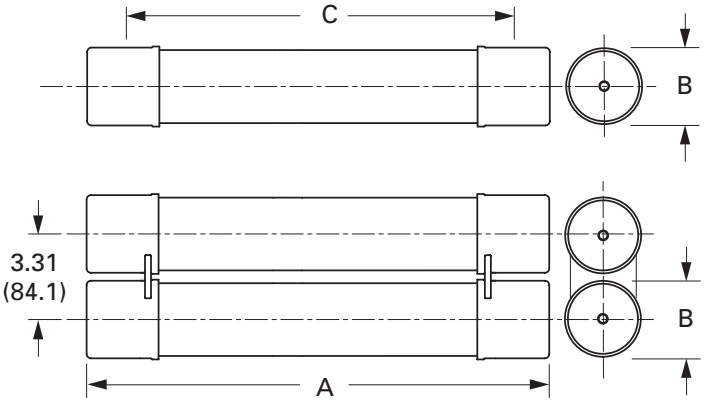

Recommended fuseclips

Description	Fuse dia. — in (mm)	Catalog no.
Enclosed fuseclip	2 (51)	A3354710*
	3 (76)	A3354730*
Open fuseclip		1A0065
Spring loaded open fuseclip		9078A67G04

* For single barrel applications only. Not sold in pairs.

Recommended CLE and HLE holders

Amps	Fuse mounting type	BIL (kV)	Approx. Dimensions — in (mm) Diameter A	Clip center B	Length C	Catalog no. Mounting* Porcelain insulator	Glass-polyester insulator	Live parts (with end fittings)	End fittings (disconnect only)
CLE									
10E-D–25E-D 30E–250E Single barrel	Non-disconnect	60	3.0 (76.2)	14.0 (355.6)	17.9 (454.7)	5CLE-PNM-D	5CLE-GNM-D	CLE-NL-D	—
	Disconnect†					5CLE-PDM-D	5CLE-GDM-D	CLE-DL-D	CLE-DF-D
15E–25E Single barrel	Non-disconnect		2.0 (50.8)	11.5 (292.1)	12.9 (327.7)	5CLE-PNM-C	5CLE-GNM-C	CLE-NL-C	—
	Disconnect†					5CLE-PDM-C	5CLE-GDM-C	CLE-DL-C	CLE-DF-C
300E–450E Double barrel	Non-disconnect		3.0 (76.2)	14.0 (355.6)	17.9 (454.7)	5CLE-PNM-E	5CLE-GNM-E	CLE-NL-E	—
	Disconnect†					5CLE-PDM-E	5CLE-GDM-E	CLE-DL-E	CLE-DF-E
600E and 750E Double barrel	Consult factory		4.0 (101.6)	N/A	N/A	—	—	—	—
1100E and 1350E Four barrel	Consult factory	—							
HLE									
10E-D–250E Single barrel	Non-disconnect	60	3.0 (76.2)	12.0 (304.8)	15.9 (403.9)	5HLE-PNM-D	5HLE-GNM-D	CLE-NL-D	—
	Disconnect					5HLE-PDM-D	5HLE-GDM-D	CLE-DL-D	CLE-DF-D
300E–450E Double barrel	Non-disconnect					5HLE-PNM-E	5HLE-GNM-E	CLE-NL-E	—
	Disconnect					5HLE-PDM-E	5HLE-GDM-E	CLE-DL-E	CLE-DF-E

* Including live parts and end fittings, end fittings supplied only when required.
† Disconnect mountings provide a means for fuse extraction only. Do not use a disconnect mounting for load switching or fuse removal while energized.

CLE, HLE and JCY general purpose

Amps	Dimensions — in (mm) Length A	Diameter B	Clip centers C	IR RMS Sym. (kA)	No. of barrels	Installation location	Catalog no.
1	11.2 (284)	2 (51)	9 (229)	40	1	Indoor/outdoor	JCY-1E
2							JCY-2E
3							JCY-3E
5							JCY-5E
7							JCY-7E
10							JCY-10E
10	17.9 (455)	3 (76)	14 (356)	63			5CLE-10E-D
10	15.9 (404)		12 (305)				5HLE-10E
15	11.2 (284)	2 (51)	9 (229)	40			JCY-15E
15	12.9 (328)		11.5 (292)	50		Indoor	5CLE-15E*
15	17.9 (455)	3 (76)	14 (356)	63		Indoor/outdoor	5CLE-15E-D
15	15.9 (404)		12 (305)				5HLE-15E
20	11.2 (284)	2 (51)	9 (229)	40			JCY-20E
20	12.9 (328)		11.5 (292)	50		Indoor	5CLE-20E*
20	17.9 (455)	3 (76)	14 (356)	63		Indoor/outdoor	5CLE-20E-D
20	15.9 (404)		12 (305)				5HLE-20E
25	11.2 (284)	2 (51)	9 (229)	40			JCY-25E
25	12.9 (328)	2 (51)	11.5 (292)	50		Indoor	5CLE-25E*
25	17.9 (455)	3 (76)	14 (356)	63		Indoor/outdoor	5CLE-25E-D
25	15.9 (404)		12 (305)				5HLE-25E
30	17.9 (455)		14 (356)				5CLE-30E
30	15.9 (404)		12 (305)				5HLE-30E
40	17.9 (455)		14 (356)	65			5CLE-40E†
40	15.9 (404)		12 (305)				5HLE-40E†
50	17.9 (455)		14 (356)				5CLE-50E†
50	15.9 (404)		12 (305)				5HLE-50E†
65	17.9 (455)		14 (356)				5CLE-65E†
65	15.9 (404)		12 (305)				5HLE-65E†
80	17.9 (455)		14 (356)				5CLE-80E†
80	15.9 (404)		12 (305)				5HLE-80E†
100	17.9 (455)		14 (356)				5CLE-100E†
100	15.9 (404)		12 (305)				5HLE-100E†
125	17.9 (455)		14 (356)				5CLE-125E†
125	15.9 (404)		12 (305)				5HLE-125E†
150	17.9 (455)		14 (356)				5CLE-150E†
150	15.9 (404)		12 (305)				5HLE-150E†
175	17.9 (455)		14 (356)				5CLE-175E†
175	15.9 (404)		12 (305)				5HLE-175E†
200	17.9 (455)		14 (356)				5CLE-200E†
200	15.9 (404)		12 (305)				5HLE-200E†
250	17.9 (455)		14 (356)				5CLE-250E†
250	15.9 (404)		12 (305)				5HLE-250E†
300	17.9 (455)		14 (356)		2		5CLE-300E†
300	15.9 (404)		12 (305)				5HLE-300E†
350	17.9 (455)		14 (356)				5CLE-350E†
350	15.9 (404)		12 (305)				5HLE-350E†
400	17.9 (455)		14 (356)				5CLE-400E†
400	15.9 (404)		12 (305)				5HLE-400E†
450	17.9 (455)		14 (356)				5CLE-450E†
450	15.9 (404)		12 (305)				5HLE-450E†

* Fuses conform to dimensional standards established by Westinghouse.
† UL Listed, Guide JEEG, File E240398.

Data sheet no. 10351

MV055 full range

Amps	Dimensions — in (mm) Length A	Diameter B	Clip centers C	IR RMS Sym. (kA)	No. of Barrels	Installation location	Catalog no.
5							MV055F1CAX5E
7		2 (51)					MV055F1CAX7E
10							MV055F1CAX10E
10		3 (76)					MV055F1DAX10E
15		2 (51)					MV055F1CAX15E
15		3 (76)					MV055F1DAX15E
20		2 (51)					MV055F1CAX20E
20		3 (76)					MV055F1DAX20E
25		2 (51)					MV055F1CAX25E
25		3 (76)					MV055F1DAX25E
30		2 (51)					MV055F1CAX30E
30		3 (76)			1		MV055F1DAX30E
40		2 (51)					MV055F1CAX40E
40		3 (76)					MV055F1DAX40E
50	15.7 (399)	2 (51)	12 (305)	50		Indoor	MV055F1CAX50E
50		3 (76)					MV055F1DAX50E
65		2 (51)					MV055F1CAX65E
65							MV055F1DAX65E
80							MV055F1DAX80E
100							MV055F1DAX100E
125							MV055F1DAX125E
150							MV055F1DAX150E
175		3 (76)					MV055F1DAX175E
200							MV055F1DAX200E
250							MV055F2DAX250E
300							MV055F2DAX300E
350					2		MV055F2DAX350E
400							MV055F2DAX400E
450							MV055F2DAX450E

Recommended MV055 fuseclips

Description	Fuse dia. — in (mm)	Catalog no.
Enclosed fuseclip	2 (51)	A3354710*
	3 (76)	A3354730*
Open fuseclip		1A0065
Spring loaded open fuseclip		9078A67G04

* For single barrel applications only. Not sold in pairs.

5.5 kV E-Rated medium voltage specialty mount fuses

Catalog symbols

- 5AHLE-_E (for Eaton AMPGARD motor starting assemblies)
- 5BHLE-_E / 5BHCL-_E (bolt-on version)
- 5CLE-_E
- 5HCL-_E (clip-lock version)

Ratings*

- Volts 5.5 kV
- Amps 10 to 900 A
- Interrupting ratings 31 to 63 kA RMS Sym.

* See catalog number tables for voltages, ampacities and interrupting ratings by catalog number.

Agency information

- E-Rated fuses meet the performance characteristics of ANSI C37.46

Recommended live parts for clip-lock fuses

- Catalog number HCL-NL-1

Dimensions — in (mm)

BHLE bolt-on

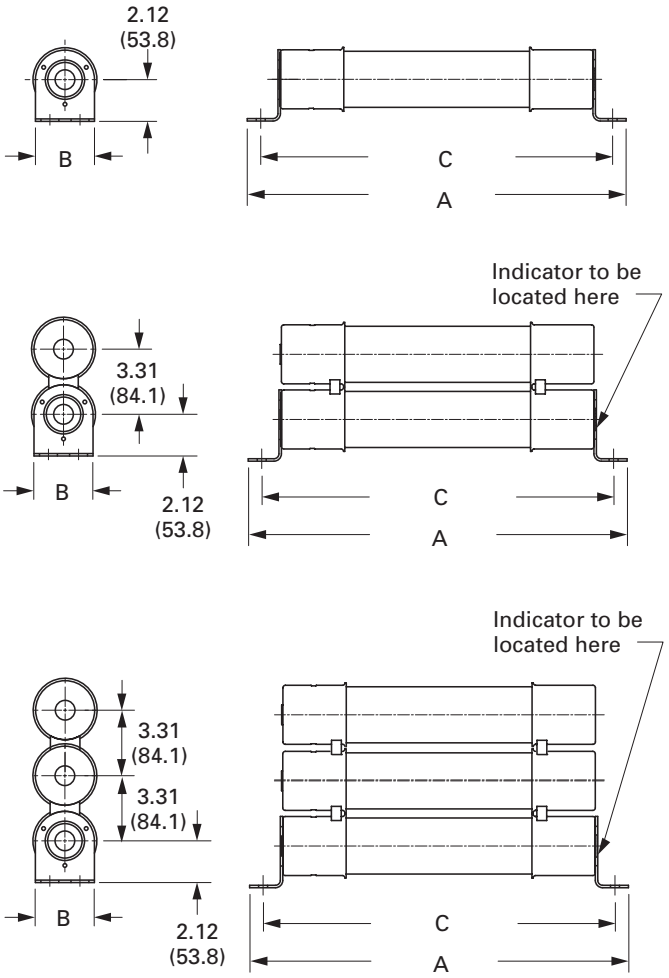

HCL clip-lock

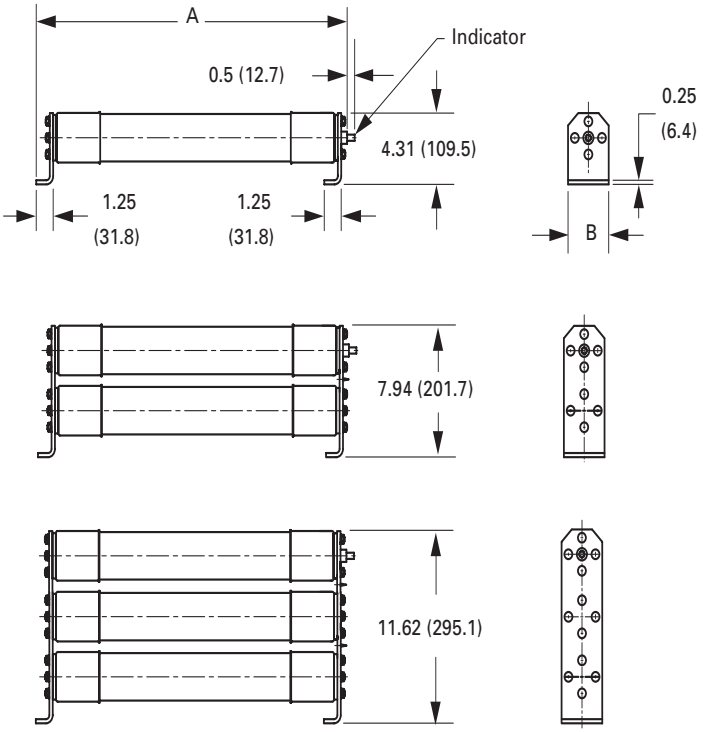

CLE four-barrel bolt-on

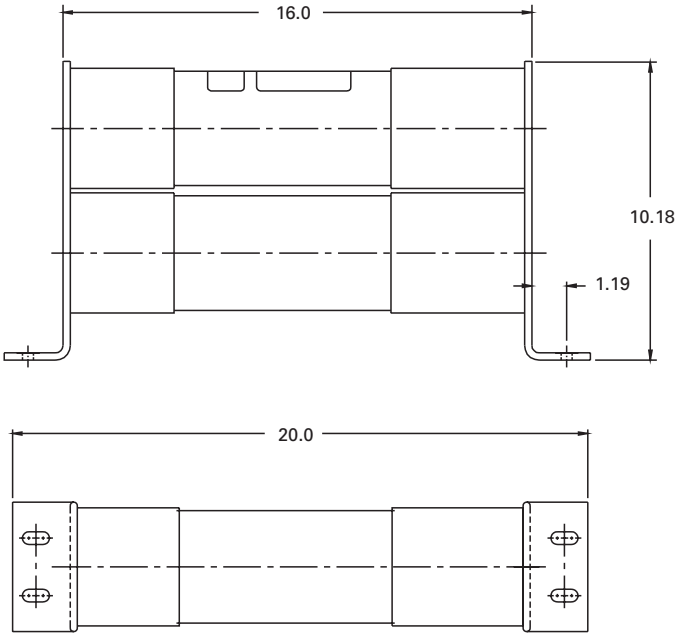

Note: 1100E and 1350E fuses require two double barrel fuses (4 total barrels) customer to parallel.

Data sheet no. 10351

AHLE for Eaton AMPGARD motor starting assemblies

Amps	IR RMS Sym. (kA)	No. of barrels	Catalog no.
10	65	1	5AHLE-10E
15			5AHLE-15E
20			5AHLE-20E
25			5AHLE-25E
30			5AHLE-30E
40			5AHLE-40E†
50			5AHLE-50E†
65			5AHLE-65E†
80			5AHLE-80E†
100			5AHLE-100E†
125			5AHLE-125E†
150			5AHLE-150E†
175			5AHLE-175E†
200			5AHLE-200E†
250			5AHLE-250E†
300		2	5AHLE-300E†
350			5AHLE-350E†
400			5AHLE-400E†
450			5AHLE-450E†

† UL Listed, Guide JEEG, File E240398.

HCL clip-lock versions

Amps	Dimensions — in (mm)			IR RMS Sym. (kA)	No. of barrels	Installation location	Catalog no.
	Length A	Diameter B	Hole centers C				
10	16.8 (427)	3 (76)	N/A	65	1	Indoor	5HCL-10E
15							5HCL-15E
20							5HCL-20E
25							5HCL-25E
30							5HCL-30E
40							5HCL-40E†
50							5HCL-50E†
65							5HCL-65E†
80							5HCL-80E†
100							5HCL-100E†
125							5HCL-125E†
150							5HCL-150E†
200	22.8 (579)				2		5HCL-200E†
250							5HCL-250E†
300							5HCL-300E†
400							5HCL-400E†
450							5HCL-450E†
500							5HCL-500E
600							5HCL-600E

† UL Listed, Guide JEEG, File E240398.

CLE, BHLE and BHCL bolt-on versions

Amps	Dimensions — in (mm) Length A	Diameter B	Hole centers C	IR RMS Sym. (kA)	No. of barrels	Installation location	Catalog no.
10	19.2 (488)	3 (76)	17.9 (455)	65	1	Indoor	5BHLE-10E
15							5BHLE-15E
20							5BHLE-20E
25							5BHLE-25E
30							5BHLE-30E
40							5BHLE-40E†
50							5BHLE-50E†
65							5BHLE-65E†
80							5BHLE-80E†
100							5BHLE-100E†
125							5BHLE-125E†
150							5BHLE-150E†
175							5BHLE-175E†
200							5BHLE-200E†
200	25.1 (637)		23.7 (602)				5BHCL-200E
250	19.2 (488)		17.9 (455)				5BHLE-250E†
250	25.1 (637)		23.7 (602)				5BHCL-250E
300	19.2 (488)		17.9 (455)		2		5BHLE-300E†
300	25.1 (637)		23.7 (602)				5BHCL-300E
350	19.2 (488)		17.9 (455)				5BHLE-350E†
400							5BHLE-400E†
400	25.1 (637)		23.7 (602)				5BHCL-400E
450	19.2 (488)		17.9 (455)				5BHLE-450E†
450	25.1 (637)		23.7 (602)				5BHCL-450E
500							5BHCL-500E
600							5BHCL-600E
600	28.9 (734)	4 (102)	18.4 (467)	40			5CLE-600E
750	25.1 (637)	3 (76)	23.7 (602)	63	3		5BHCL-750E
750	28.9 (734)	4 (102)	18.4 (467)	40	2		5CLE-750E
900	25.1 (637)	3 (76)	23.7 (602)	63	3		5BHCL-900E
1100	19.8 (503)	4 (102)	18.4 (467)	31	4		5CLE-1100E
1350							5CLE-1350E

† UL Listed, Guide JEEG, File E240398.

Data sheet no. 10351

8.3 kV E-Rated medium voltage ferrule fuses

Catalog symbols

- 8CLE-_E-D (10-25 A)
- 8CLE-_E (10-350 A)
- 8HLE-_E (10-350 A)

Ratings*

- Volts 8.3 kV
- Amps 10 to 350 A
- IR 50 kA RMS Sym.

* See catalog number tables for voltages, ampacities and interrupting ratings by catalog number.

Agency information

- E-Rated fuses meet the performance characteristics of ANSI C37.46

Dimensions — in (mm)

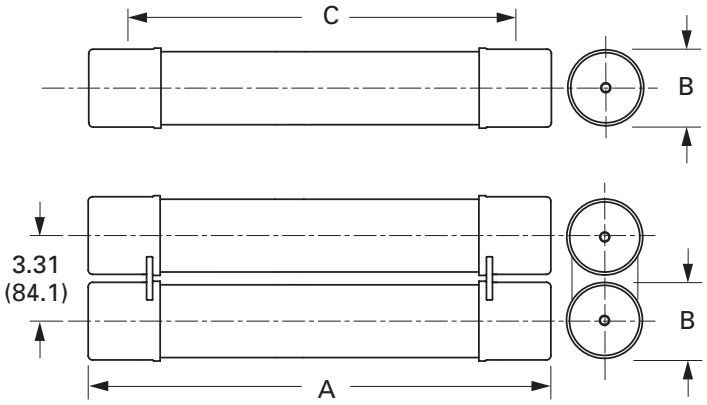

Recommended fuseclips

Description	Fuse dia. — in (mm)	Catalog no.
Enclosed fuseclip	2 (51)	A3354710*
	3 (76)	A3354730*
Open fuseclip		1A0065
Spring loaded open fuseclip		9078A67G04

* For single barrel applications only. Not sold in pairs.

Recommended fuse holders

Amps	Fuse mounting type	BIL (kV)	Approx. dimensions — in (mm) Diameter A	Clip center B	Length C	Catalog no. Mounting* Porcelain insulator	Glass-polyester insulator	Live parts (with end fittings)	End fittings (disconnect only)
CLE									
10E-D–25E-D 30E–175E Single barrel	Non-disconnect	75	3.0 (76)	14 (356)	17.9 (455)	8CLE-PNM-D	8CLE-GNM-D	CLE-NL-D	—
	Disconnect†					8CLE-PDM-D	8CLE-GDM-D	CLE-DL-D	CLE-DF-D
15E–25E Single Barrel	Non-disconnect		2.0 (51)		15.5 (394)	8CLE-PNM-C	8CLE-GNM-C	CLE-NL-C	—
	Disconnect†					8CLE-PDM-C	8CLE-GDM-C	CLE-DL-C	CLE-DF-C
200E–350E Double barrel	Non-disconnect		3.0 (76)		17.9 (455)	8CLE-PNM-E	8CLE-GNM-E	CLE-NL-E	—
	Disconnect					8CLE-PDM-E	8CLE-GDM-E	CLE-DL-E	CLE-DF-E
HLE									
10E-175E Single barrel	Non-disconnect	75	3.0 (76)	12 (305)	15.9 (404)	8HLE-PNM-D	8HLE-GNM-D	CLE-NL-D	—
	Disconnect†					8HLE-PDM-D	8HLE-GDM-D	CLE-DL-D	CLE-DF-D
200E–350E Double barrel	Non-disconnect					8HLE-PNM-E	8HLE-GNM-E	CLE-NL-E	—
	Disconnect†					8HLE-PDM-E	8HLE-GDM-E	CLE-DL-E	CLE-DF-E

* Including live parts and end fittings, end fittings supplied only when required.
† Disconnect mountings provide a means for fuse extraction only. Do not use a disconnect mounting for load switching or fuse removal while energized.

CLE and HLE Type fuses

Amps	Dimensions — in (mm) Length A	Diameter B	Clip centers C	IR RMS Sym. (kA)	No. of barrels	Installation location	Catalog no.
CLE Long construction (Westinghouse)							
10	17.9 (455)	3 (76)				Indoor/outdoor	8CLE-10E-D
15	15.5 (394)	2 (51)				Indoor	8CLE-15E*
15	17.9 (455)	3 (76)				Indoor/outdoor	8CLE-15E-D
20	15.5 (394)	2 (51)				Indoor	8CLE-20E*
20	17.9 (455)	3 (76)				Indoor/outdoor	8CLE-20E-D
25	15.5 (394)	2 (51)				Indoor	8CLE-25E*
25							8CLE-25E-D
30					1		8CLE-30E
40							8CLE-40E
50			14 (356)	50			8CLE-50E
65							8CLE-65E
80							8CLE-80E
100	17.9 (455)	3 (76)				Indoor/outdoor	8CLE-100E
125							8CLE-125E
150							8CLE-150E
175							8CLE-175E
200							8CLE-200E
250					2		8CLE-250E
300							8CLE-300E
350							8CLE-350E
HLE Short construction							
10							8HLE-10E
15							8HLE-15E
20							8HLE-20E
25							8HLE-25E
30							8HLE-30E
40							8HLE-40E
50					1		8HLE-50E
65							8HLE-65E
80	15.9 (404)	3 (76)	12 (305)	50		Indoor/outdoor	8HLE-80E
100							8HLE-100E
125							8HLE-125E
150							8HLE-150E
175							8HLE-175E
200							8HLE-200E
250					2		8HLE-250E
300							8HLE-300E
350							8HLE-350E

* Fuses conform to dimensional standards established by Westinghouse.

Data sheet no. 10352

8.3 kV E-Rated medium voltage specialty mount fuses

Catalog symbols

- 8AHLE-_E (special dimension fuses for use with 7.2 kV rated, 800 amp AMPGARD motor starting assemblies)
- 8BHLE-_E (bolt-on version)
- 8HCL-_E (clip-lock version)

Ratings*

- Volts 8.3 kV
- Amps 10 to 350 A
- Interrupting rating 50 kA RMS Sym.

* See catalog number tables for voltages, ampacities and interrupting ratings by catalog number.

Agency information

- E-Rated fuses meet the performance characteristics of ANSI C37.46

Recommended live parts for clip-lock fuses

- Catalog number HCL-NL-1

Dimensions for BHLE — in (mm)

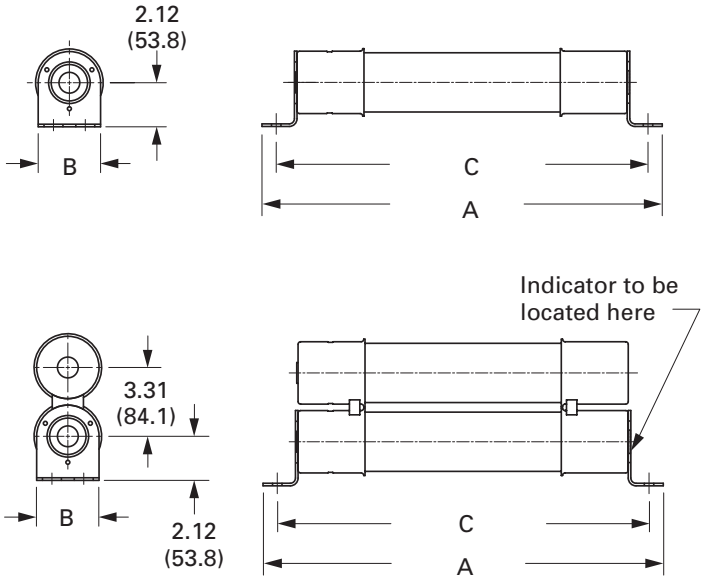

Dimensions for HCL — in (mm)

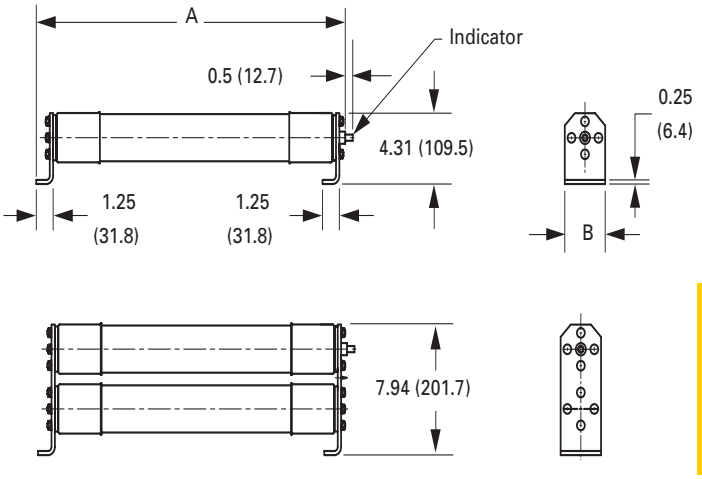

AHLE Type fuses

Special dimension fuses for use with 7.2 kV rated, 800 amp AMPGARD motor starting assemblies.

Amps	IR RMS Sym. (kA)	No. of barrels	Catalog no.
10	50	1	8AHLE-10E
15			8AHLE-15E
20			8AHLE-20E
25			8AHLE-25E
30			8AHLE-30E
40			8AHLE-40E
50			8AHLE-50E
65			8AHLE-65E
80			8AHLE-80E
100			8AHLE-100E
125			8AHLE-125E
150			8AHLE-150E
175			8AHLE-175E
200		2	8AHLE-200E
250			8AHLE-250E
300			8AHLE-300E
350			8AHLE-350E

BHLE bolt-on versions

Amps	Dimensions — in (mm)			IR RMS Sym. (kA)	No. of barrels	Installation location	Catalog no.
	Overall length	Diameter	Hole centers				
10	19.25 (488.9)	3 (76.2)	17.88 (454.2)	50	1	Indoor	8BHLE-10E
15							8BHLE-15E
20							8BHLE-20E
25							8BHLE-25E
30							8BHLE-30E
40							8BHLE-40E
50							8BHLE-50E
65							8BHLE-65E
80							8BHLE-80E
100							8BHLE-100E
125							8BHLE-125E
150							8BHLE-150E
175							8BHLE-175E
200					2		8BHLE-200E
250							8BHLE-250E
300							8BHLE-300E
350							8BHLE-350E

HCL Clip lock versions

Amps	Dimensions — in (mm)			IR RMS Sym. (kA)	No. of barrels	Installation location	Catalog no.
	Overall length	Diameter	Hole centers				
65	22.5 (571.5)	3 (76.2)	N/A	50	1	Indoor/outdoor	8HCL-65E
80							8HCL-80E
100							8HCL-100E
125							8HCL-125E
150							8HCL-150E
175							8HCL-175E
200					2		8HCL-200E
250							8HCL-250E
300							8HCL-300E
350							8HCL-350E

Data sheet no. 10352

15.5 kV E-Rated medium voltage ferrule fuses

Catalog symbols

- General purpose
  - 15CLE-_E-D (long construction, 10-25 A)
  - 15CLE-_E (long construction, 15-300 A)
  - 15HLE-_E (short construction, 10-250 A)
  - 15LHLE-_E (intermediate construction, 65-300 A)
- Full range (per ANSI C37.40)
  - MV155F_

Ratings*

- Volts 15.5 kV
- Amps 10 to 300 A
- Interrupting ratings 31.5 to 63 kA RMS Sym.

* See catalog number tables for voltages, ampacities and interrupting ratings by catalog number.

Agency information

- E-Rated fuses meet the performance characteristics of ANSI C37.46
- UL Listed, Guide JEEG, File E240398. See catalog numbers.

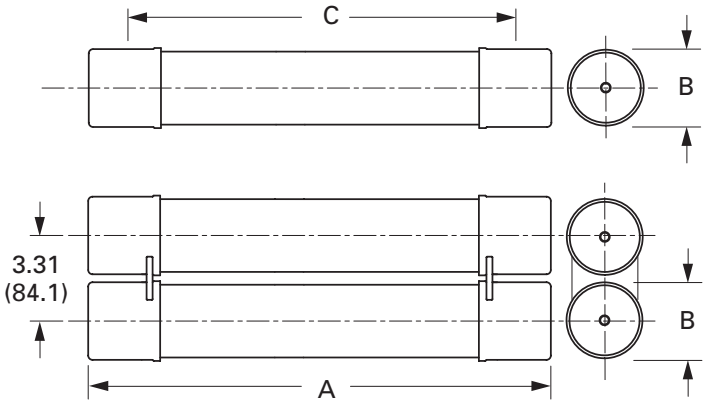

Dimensions — in (mm)

Recommended fuseclips

Description	Fuse dia. — in (mm)	Catalog no.
Enclosed fuseclip	2 (51)	A3354710*
	3 (76)	A3354730*
Open fuseclip		1A0065
Spring loaded open fuseclip		9078A67G04

* For single barrel applications only. Not sold in pairs.

Recommended fuse holders

Amps	Fuse mounting type	BIL (kV)	Approx. dimensions — in (mm) Diameter	Clip center	Length	Catalog no. Mounting* Porcelain insulator	Glass-polyester insulator	Live parts (with end fittings)	End fittings (disconnect only)
CLE									
15E–25E Single barrel	Non-disconnect	95	2 (51)	20 (508)	21.5 (546)	15CLE-PNM-C	15CLE-GNM-C	CLE-NL-C	—
		110				15CLE-HPNM-C	—	CLE-NL-C	—
	Disconnect†	95				15CLE-PDM-C	15CLE-GDM-C	CLE-DL-C	CLE-DF-C
		110				15CLE-HPDM-C	—	CLE-DL-C	CLE-DF-C
10E-D–25E-D 30E–150E Single barrel	Non-disconnect	95	3 (76)		23.9 (607)	15CLE-PNM-D	15CLE-GNM-D	CLE-NL-D	—
		110				15CLE-HPM-D	—	CLE-NL-D	—
	Disconnect†	95				15CLE-PDM-D	15CLE-GDM-D	CLE-DL-D	CLE-DF-D
		110				15CLE-HPDM-D	—	CLE-DL-D	CLE-DF-D
175E–300E Double barrel	Non-disconnect	110				15CLE-PNM-E	—	CLE-NL-E	—
	Disconnect†	110				15CLE-PDM-E	—	CLE-DL-E	CLE-DF-E
HLE									
10E-125E Single barrel	Non-disconnect	95	3 (76)	15 (381)	18.9 (480)	15HLE-PNM-D	15HLE-GNM-D	CLE-NL-D	—
	Disconnect†	95				15HLE-PDM-D	15HLE-GDM-D	CLE-DL-D	CLE-DF-D
150E–250E Double barrel	Non-disconnect	95				15HLE-PNM-E	—	CLE-NL-E	—
	Disconnect†	95				15HLE-PDM-E	—	CLE-DL-E	CLE-DF-E
LHLE									
65E–150E Single barrel	Non-disconnect	—	3 (76)	18 (457)	20.53 (521)	Not available	Not available	CLE-NL-D	—
	Disconnect†	—						CLE-DL-D	CLE-DF-D
175E–300E Double barrel	Non-disconnect	—						CLE-NL-E	—
	Disconnect†	—						CLE-DL-E	CLE-DF-E

* Including live parts and end fittings, end fittings supplied only when required.
† Disconnect mountings provide a means for fuse extraction only. Do not use a disconnect mounting for load switching or fuse removal while energized.

CLE, HLE and LHLE Type general purpose fuses

Amps	Dimensions — in (mm) Length A	Diameter B	Clip centers C	IR RMS Sym. (kA)	No. of barrels	Installation location	Catalog no.
CLE Long construction							
10	23.9 (607)	3 (76)		63		Indoor/outdoor	15CLE-10E-D
15	21.5 (546)	2 (51)		31.5		Indoor	15CLE-15E*
15	23.9 (607)	3 (76)		63		Indoor/outdoor	15CLE-15E-D
20	21.5 (546)	2 (51)		31.5		Indoor	15CLE-20E*
20	23.9 (607)	3 (76)		63		Indoor/outdoor	15CLE-20E-D
25	21.5 (546)	2 (51)		31.5		Indoor	15CLE-25E*
25							15CLE-25E-D
30					1		15CLE-30E
40							15CLE-40E†
50			20 (508)				15CLE-50E†
65							15CLE-65E†
80							15CLE-80E†
100	23.9 (607)	3 (76)		63		Indoor/outdoor	15CLE-100E†
125							15CLE-125E†
150							15CLE-150E†
175							15CLE-175E†
200					2		15CLE-200E†
250							15CLE-250E†
300							15CLE-300E†
HLE Short construction							
10							15HLE-10E
15							15HLE-15E
20							15HLE-20E
25							15HLE-25E
30							15HLE-30E
40					1		15HLE-40E†
50							15HLE-50E†
65	18.9 (480)	3 (76)	15 (381)	63		Indoor/outdoor	15HLE-65E†
80							15HLE-80E†
100							15HLE-100E†
125							15HLE-125E†
150							15HLE-150E†
175					2		15HLE-175E†
200							15HLE-200E†
250							15HLE-250E†
LHLE							
65							15LHLE-65E
80							15LHLE-80E
100					1		15LHLE-100E
125							15LHLE-125E
150	20.5 (521)	3 (76)	18 (457)	50		Indoor/outdoor	15LHLE-150E
175							15LHLE-175E
200					2		15LHLE-200E
250							15LHLE-250E
300							15LHLE-300E

* Fuses conform to dimensional standards established by Westinghouse.
† UL Listed, Guide JEEG, File E240398.

Data sheet no. 10353

MV155F_ Full range

Amps	Dimensions — in (mm) Length A	Diameter B	Clip centers C	IR RMS Sym. (kA)	No. of barrels	Installation location	Catalog no.
5							MV155F1CBX5E
7		2 (51)					MV155F1CBX7E
10							MV155F1CBX10E
10		3 (76)					MV155F1DBX10E
15		2 (51)					MV155F1CBX15E
15		3 (76)					MV155F1DBX15E
20		2 (51)					MV155F1CBX20E
20	18.7 (475)	3 (76)	15 (381)				MV155F1DBX20E
25		2 (51)					MV155F1CBX25E
25		3 (76)					MV155F1DBX25E
30		2 (51)			1		MV155F1CBX30E
30							MV155F1DBX30E
40							MV155F1DBX40E
50							MV155F1DBX50E
65				50		Indoor	MV155F1DBX65E
65	21.7 (551)		18 (457)				MV155F1DCX65E
80	18.7 (475)		15 (381)				MV155F1DBX80E
80	21.7 (551)		18 (457)				MV155F1DCX80E
100	18.7 (475)		15 (381)				MV155F1DBX100E
100	21.7 (551)	3 (76)	18 (457)				MV155F1DCX100E
125	18.7 (475)		15 (381)				MV155F2DBX125E
125	21.7 (551)		18 (457)				MV155F2DCX125E
150	18.7 (475)		15 (381)				MV155F2DBX150E
150	21.7 (551)		18 (457)		2		MV155F2DCX150E
175	18.7 (475)		15 (381)				MV155F2DBX175E
175	21.7 (551)		18 (457)				MV155F2DCX175E
200	18.7 (475)		15 (381)				MV155F2DBX200E
200	21.7 (551)		18 (457)				MV155F2DCX200E

15.5 kV E-Rated medium voltage specialty mount fuses

Catalog symbols

- 15BHLE-_E (bolt-on version)
- 15HCL-_E (clip-lock version)

Ratings*

- Volts 15.5 kV
- Amps 10 to 300 A
- Interrupting ratings 50 to 63 kA RMS Sym.

* See catalog number tables for voltages, ampacities and interrupting ratings by catalog number.

Agency information

- E-Rated fuses meet the performance characteristics of ANSI C37.46

Recommended live parts for clip-lock fuses

- Catalog number HCL-NL-1

Dimensions — in (mm)

BHLE

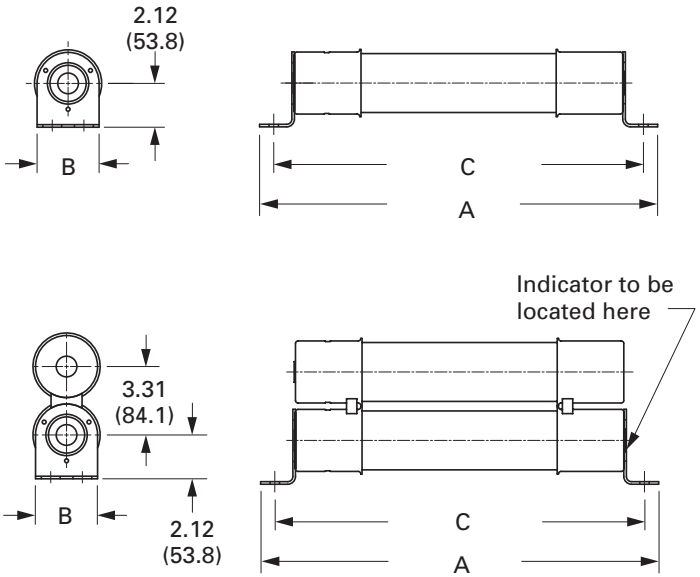

HCL

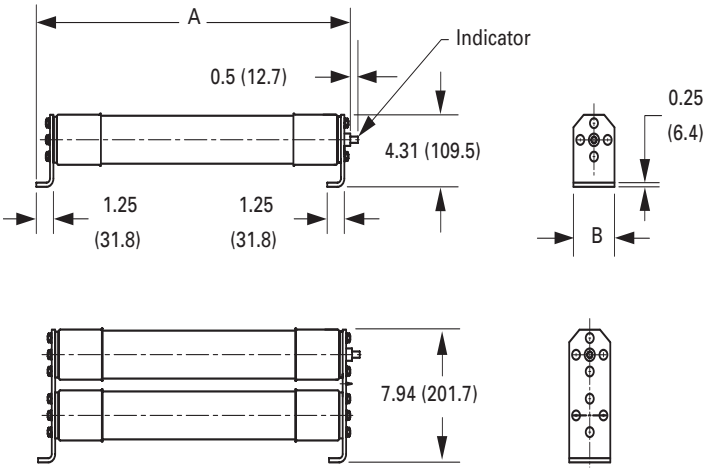

Data sheet no. 10353

BHCL, BHLE and HCL Type fuses

Amps	Dimensions — in (mm) Length A	Diameter B	Hole centers C	IR RMS Sym. (kA)	No. of barrels	Installation location	Catalog no.
BHCL and BHLE bolt-on							
10							15BHLE-10E
15							15BHLE-15E
20							15BHLE-20E
25							15BHLE-25E
30							15BHLE-30E
40					1		15BHLE-40E†
50							15BHLE-50E†
65	22.2 (563)		20.9 (531)	63		Indoor/outdoor	15BHLE-65E†
80		3 (76)					15BHLE-80E†
100							15BHLE-100E†
125							15BHLE-125E†
150							15BHLE-150E†
175							15BHLE-175E†
200					2		15BHLE-200E†
250							15BHLE-250E†
300	25.1 (637)		23.7 (602)	50		Indoor	15BHCL-300E
400					3	Indoor	15BHCL-400E
HCL clip-lock							
10							15HCL-10E
15							15HCL-15E
20							15HCL-20E
25							15HCL-25E
30							15HCL-30E
40					1		15HCL-40E†
50							15HCL-50E†
65							15HCL-65E†
80	22.8 (579)	3 (76)	N/A	63		Indoor	15HCL-80E†
100							15HCL-100E†
125							15HCL-125E†
150							15HCL-150E†
175							15HCL-175E†
200					2		15HCL-200E†
250							15HCL-250E†
300							15HCL-300E†

† UL Listed, Guide JEEG, File E240398.

5.5 to 38 kV E-Rated DIN medium voltage fuses

Bussmann series DIN dimensioned E-Rated medium voltage power fuses with striker for indoor use. Available in general purpose (5.5 to 17.5 kV) and full range (25.8 to 38 kV) versions.

Ratings

- Volts 5.5 - 38 kV
- Amps 10 - 450 A
- Interrupting ratings 25 to 65 kA

Agency information

- General purpose E-Rated per ANSI C37.46 (5.5 to 17.5 kV)
- Full range E-Rated per ANSI C37.40 (25.8 to 38 kV)

Striker force

- 50 N (11 lbs)

Recommended fuseclips

See page 7-36 for dimensions.

Amp range	Description	Catalog no.
Up to 200 A	Enclosed fuseclip with wingnut tensioner	A3354745*
	Open fuseclip with spring tensioner	270303

* Not sold in pairs.

Features

- Cool running for lower watts loss
- 100% X-ray inspected to help assure fuse integrity
- Striker provides visual indication of fuse operation or a means to activate a remote monitoring system

Typical applications

- Primary protection for medium voltage transformers and switch gear
- Protection of medium voltage feeder circuits
- Direct OEM replacement fuses for 600 A Square D HVLCC and HVL switches

Dimensions — in (mm)

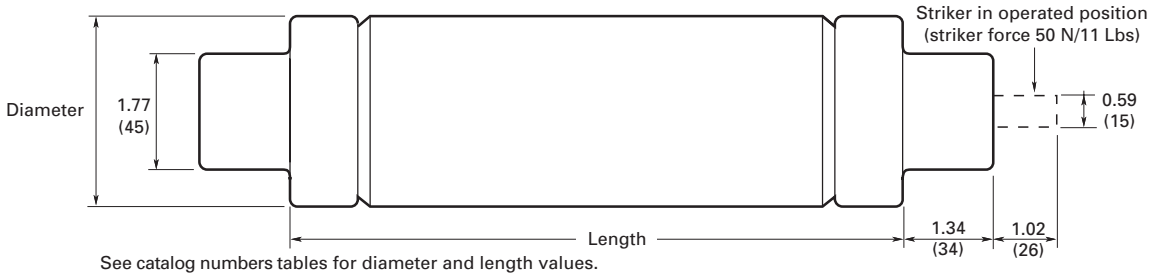

Data sheet no. 10638

Catalog no.	Amps	Interrupting rating (Sym. kA)	Dimensions — in (mm) Length	Diameter
General purpose versions				
5.5 kV				
55GDMSJ10E	10	65	17.4 (442)	2 (51)
55GDMSJ15E	15			
55GDMSJ20E	20			
55GDMSJ25E	25			
55GDMSJ30E	30			
55GDMSJ40E	40			
55GDMSJ50E	50			
55GDMSJ65E	65			
55GDMSJ80E	80			
55GDMSJ100E	100			
55GDMSJ125E	125			
55GFMSJ150E	150		17.4 (442)	3 (76)
55GFMSJ175E	175			
55GFMSJ200E	200			
55GFMSJ250E	250			
55GFMSJ300E	300			
55GFMSJ350E	350			
55GFMSJ400E	400			
55GFMSJ450E	450			
15.5 kV				
155GXQSJ175E	175	65	21.1 (537)	3.5 (89)
155GXQSJ200E	200			
17.5 kV				
175GDMSJ10E	10	65	17.4 (442)	2 (51)
175GDMSJ15E	15			
175GDMSJ20E	20			
175GDMSJ25E	25			
175GDMSJ30E	30			
175GFMSJ40E	40		17.4 (442)	3 (76)
175GFMSJ50E	50			
175GFMSJ65E	65			
175GXMSJ80E	80		17.4 (442)	3.5 (89)
175GXMSJ100E	100			
175GXQSJ125E	125		21.1 (537)	3.5 (89)
175GXQSJ150E	150			
Full range versions				
25.8 kV				
258GDQSJ10E	10	25	21.1 (537)	2 (51)
258GDQSJ15E	15			
258GDQSJ20E	20			
258GDQSJ25E	25			
258GDQSJ30E	30			
258GXQSJ40E	40		21.1 (537)	3.5 (89)
258GXQSJ50E	50			
258GXQSJ65E	65			
258GXZSJ80E	80		28.3 (718)	3.5 (89)
258GXZSJ100E	100			
38 kV				
38GFZSJ10E	10	25	28.3 (718)	3 (76)
38GFZSJ15E	15			
38GFZSJ20E	20			
38GFZSJ25E	25			
38GFZSJ30E	30			

2.4 kV R-Rated fuses

Catalog symbols/construction

- JCK-_R/Standard
- 2CLS-_R/Standard
- JCK-A-_R*/AMPGARD Hookeye
- 2ACLS-_R/AMPGARD Hookeye
- JCH-_R/Hermetically sealed AMPGARD
- 2HCLS-_R/Hermetically sealed AMPGARD
- JCK-B-_R/Bolt-on
- 2BCLS-_R/Bolt-on

* For use in 400 amp AMPGARD motor starters

Ratings

- Volts
  - 2.4 kV (nominal)
  - 2.54 kV (max design)
- Amps 25-450 A
- Interrupting ratings
  - 50 kA Sym.
  - 80 kA Asym.

Agency information

- UL Recognized: Guide MSSS2, File E96676 (JCK-_R [2R-12R] and JCK-A-_R [2R-12R])

Recommended fuseclips and holders for standard constructions

Amps	Description	Catalog no.
Fuseclips		
25-230A	3" Enclosed fuseclip*	A3354730
25-450A	3" Open fuseclip	1A0065
	3" Spring loaded open fuseclip	9078A67G04
Fuse holders		
25-230A Single barrel	Non-disconnect holder, porcelain	2CLE-PNM-D
	Non-disconnect holder, glass polyester	2CLE-GNM-D
	Disconnect holder, porcelain	2CLE-PDM-D
	Disconnect holder, glass polyester	2CLE-GDM-E
390-450A Double barrel	Non-disconnect holder, porcelain	2CLE-PNM-E
	Non-disconnect holder, glass polyester	2CLE-GNM-E
	Disconnect holder, porcelain	2CLE-PDM-E
	Disconnect holder, glass polyester	2CLE-GDM-E

* Single barrel only, not sold in pairs.

Dimensions — in (mm)

Construction	Amps	Dimension A	Dimension B	Dimension C	Dimension D
Standard - short	25-230A	10.8 (274)	3 (76)	3 (76)	—
	390-450A				3.3 (84)
AMPGARD Hookeye*	70-230A				—
	390-450A				3.3 (84)
Bolt-on	25-230A	19.2 (488)	17.9 (455)		—
	390-450A				3.3 (84)

* Includes hermetically sealed versions.

Standard and AMPGARD Hookeye

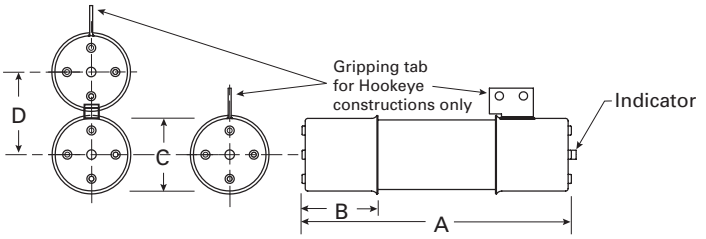

Bolt-on

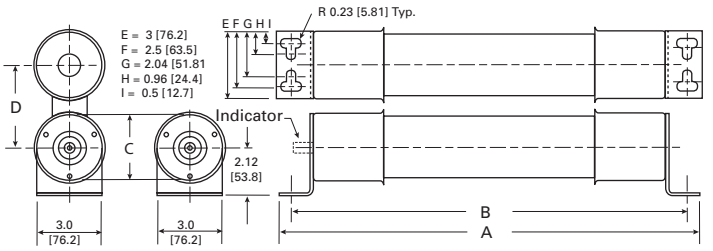

2.4 kV R-Rated fuse catalog numbers

Amps	"R" Des.	Mounting style (minimum interrupting rating in amps): Standard		Standard AMPGARD		Hermetically sealed AMPGARD		Bolt-on		No. of barrels
25	—	—	2CLS-25* (100)	—	2ACLS-25* (90)	JCH-30* (90)	2HCLS-25* (90)	JCK-B-25* (90)	2BCLS-25* (90)	1
70	2R	JCK-2R (165)	2CLS-2R (180)	JCK-A-2R (165)	2ACLS-2R (180)	JCH-2R (180)	2HCLS-2R (180)	JCK-B-2R (180)	2BCLS-2R (180)	
100	3R	JCK-3R (220)	2CLS-3R (270)	JCK-A-3R (220)	2ACLS-3R (270)	JCH-3R (270)	2HCLS-3R (270)	JCK-B-3R (270)	2BCLS-3R (270)	
130	4R	JCK-4R (320)	2CLS-4R (360)	JCK-A-4R (320)	2ACLS-4R (360)	JCH-4R (360)	2HCLS-4R (360)	JCK-B-4R (360)	2BCLS-4R (360)	
150	5R	JCK-5R (410)	2CLS-5R (450)	JCK-A-5R (410)	2ACLS-5R (450)	JCH-5R (450)	2HCLS-5R (450)	JCK-B-5R (450)	2BCLS-5R (450)	
170	6R	JCK-6R (480)	2CLS-6R (540)	JCK-A-6R (480)	2ACLS-6R (540)	JCH-6R (540)	2HCLS-6R (540)	JCK-B-6R (540)	2BCLS-6R (540)	
200	9R	JCK-9R (720)	2CLS-200* (740)	JCK-A-9R (720)	2ACLS-200* (740)	JCH-200* (740)	2HCLS-200* (740)	JCK-B-200* (740)	2BCLS-200* (740)	
230	12R	JCK-12R (970)	2CLS-230* (1080)	JCK-A-12R (970)	2ACLS-230* (1080)	JCH-230* (1080)	2HCLS-230* (1080)	JCK-B-230* (1080)	2BCLS-230* (1080)	
390	18R	JCK-18R (1430)†	2CLS-390* (1500)	JCK-A-18R (1430)†	2ACLS-390* (1500)	JCH-390* (1500)	2HCLS-390* (1500)	JCK-B-390* (1500)	2BCLS-390* (1500)	2
450	24R	JCK-24R (1880)†	2CLS-450* (2200)	JCK-A-24R (1880)†	2ACLS-450* (2200)	JCH-450* (2200)	2HCLS-450* (2200)	JCK-B-450* (2200)	2BCLS-450* (2200)	

* Does not comply with ANSI C37.46 for "R" rating.
† Not UL Recognized.

Data sheet no. 6001

4.8 kV R-Rated fuses

Catalog symbols/construction

- 5CLS-30 and 5CLS-_R/Standard - short (30 A, 2R-24R)
- JCL-_R/Standard - short (2R - 24R)
- 5LCLS-_R/Standard - long (2R - 24R)
- 5ACLS-30 and 5ACLS-_R/AMPGARD Hookeye* (30 A, 2R-24R)
- JCL-A-_R/AMPGARD Hookeye* (2R - 24R)
- 5HCLS-30 and 5HCLS-_R/Hermetically sealed AMPGARD Hookeye* (30 A, 2R-24R)
- 5BCLS-30 and 5BCLS-_R/Bolt-on (30 A, 2R-44R)
- JCL-B-_R/Bolt-on (2R-24R)
- 5MCLS-_R-_A and 5MCLS-_R-_B/Bolt-on GE Limitamp (2R- 24R)

* For use in 400 amp AMPGARD motor starters

Ratings

- Volts
  - 4.8 kV (nominal)
  - 5.0 kV (max design)
- Amps 30-800 A
- Interrupting ratings
  - 50 kA Sym.
  - 80 kA Asym.

Agency information

- UL Recognized, Guide MSSS2
  - File E96676: JCL-_R [2R-12R], JCL-A-_R [2R-12R], 5MCLS-_R-A [2R-24R], and 5MCLS-_R-B [2R-24R]
  - File E60757: 5CLS-30, 5CLS-_R [2R-18R], 5ACLS-30, and 5ACLS-_R [2R-24R]

Recommended fuseclips and holders for standard constructions

Amps	Description	BIL (kV)	Catalog no.
Fuseclips			
30-230A	3″ Enclosed fuseclip*	—	A3354730
30-450A	3″ Open fuseclip		1A0065
	3″ Spring loaded open fuseclip		9078A67G04
Fuse holders for CLS / JCL / 5HCLS			
30-230A Single barrel	Non-disconnect holder, porcelain	60	5HLE-PNM-D
	Non-disconnect holder, glass polyester		5HLE-GNM-D
	Disconnect holder, porcelain		5HLE-PDM-D
	Disconnect holder, glass polyester		5HLE-GDM-D
390-450A Double barrel	Non-disconnect holder, porcelain		5HLE-PNM-E
	Non-disconnect holder, glass polyester		5HLE-GNM-E
	Disconnect holder, porcelain		5HLE-PDM-E
	Disconnect holder, glass polyester		5HLE-GDM-E
Fuse holders for 5LCLS†			
70-230A Single barrel	Non-disconnect holder, porcelain	60	5CLE-PNM-D
	Non-disconnect holder, glass polyester		5CLE-GNM-D
	Disconnect holder, porcelain		5CLE-PDM-D
	Disconnect holder, glass polyester		5CLE-GDM-D
	Disconnect holder, porcelain	75	8CLE-PDM-D
	Disconnect holder, glass polyester		8CLE-GDM-D
390-450A Double Barrel	Disconnect holder, porcelain	60	5CLE-PDM-E
	Disconnect holder, glass polyester		5CLE-GDM-E

* Single barrel only, not sold in pairs.
**Not available for standard - long constructions
† Not available for 390 to 450 amp ratings.

Dimensions — in (mm)

Construction	Amp	Dimension A	B	C	D
Standard - short	30-230	15.6 (396)	3 (76)	3 (76)	—
	390-450				3.3 (84)
Standard - long	70-230	17.8 (452)			—
	390-450				3.3 (84)
AMPGARD Hookeye*	30-230	15.6 (396)			—
	390-450				3.3 (84)
Bolt-on	30-230	19.2 (488)	17.9 (455)		—
	390-450				3.3 (84)
	600-800			4 (101)	9 (229)
Limitamp (-A)	70-230	18.3 (465)	18.8 (478)	1.4 (36)	4.8 (122)
	390-450				7.4 (188)
Limitamp (-B)	70-230				3.0 (76)
	390-450				2.4 (61)

* Includes hermetically sealed versions.

Ferrule JCL, 5LCLS, 5CLS and AMPGARD Hookeye

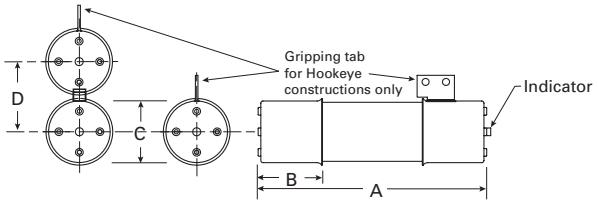

Bolt-on — 5BCLS-_

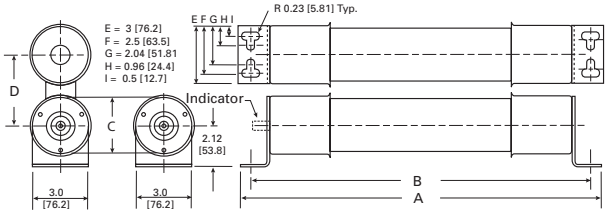

Bolt-on — 5MCLS-_R-A

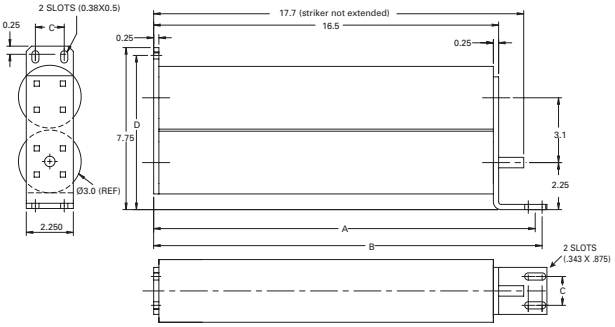

Bolt-on — 5MCLS-_R-B

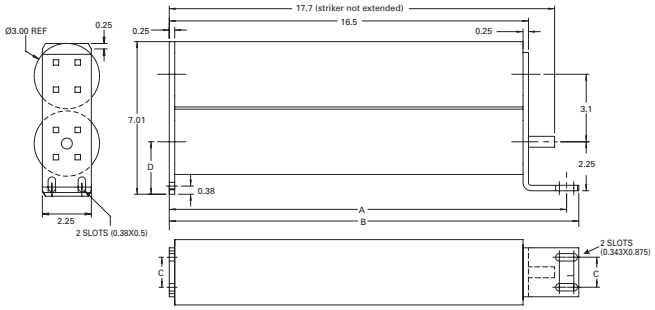

Data sheet no. 6001

4.8 kV R-Rated fuse catalog numbers

Ferrule constructions (min. interrupting rating in amps)				No. of barrels
Amps	Short	Short	Long	
30	5CLS-30* (100)	—	—	1
70	5CLS-2R (180)	JCL-2R (165)	5LCLS-2R (180)†	
100	5CLS-3R (270)	JCL-3R (220)	5LCLS-3R (270)†	
130	5CLS-4R (360)	JCL-4R (320)	5LCLS-4R (360)†	
150	5CLS-5R (450)	JCL-5R (410)	5LCLS-5R (450)†	
170	5CLS-6R (540)	JCL-6R (480)	5LCLS-6R (540)†	
200	5CLS-9R (740)	JCL-9R (720)	5LCLS-9R (740)†	
230	5CLS-12R (1080)	JCL-12R (970)	5LCLS-12R (1080)†	
390	5CLS-18R (1500)	JCL-18R (1430)†	5LCLS-18R (1500)†	2
450	5CLS-24R (2200)†	JCL-24R (1880)†	5LCLS-24R (2200)†	

* Does not comply with ANSI C37.46 for "R" rating.
† Not UL Recognized.

AMPGARD Hookeye (min. interrupting rating in amps)				No. of barrels
Amps	Hookeye	Hookeye	Hermetic seal	
30	5ACLS-30* (100)	—	5HCLS-30* (100)†	1
70	5ACLS-2R (180)	JCL-A-2R (165)	5HCLS-2R (180)†	
100	5ACLS-3R (270)	JCL-A-3R (220)	5HCLS-3R (270)†	
130	5ACLS-4R (360)	JCL-A-4R (320)	5HCLS-4R (360)†	
150	5ACLS-5R (450)	JCL-A-5R (410)	5HCLS-5R (450)†	
170	5ACLS-6R (540)	JCL-A-6R (480)	5HCLS-6R (540)†	
200	5ACLS-9R (740)	JCL-A-9R (720)	5HCLS-9R (740)†	
230	5ACLS-12R (1080)	JCL-A-12R (970)	5HCLS-12R (1080)†	
390	5ACLS-18R (1500)	JCL-A-18R (1430)†	5HCLS-18R (1500)†	2
450	5ACLS-24R (2200)	JCL-A-24R (1880)†	5HCLS-24R (2200)†	

* Does not comply with ANSI C37.46 for "R" rating.
† Not UL Recognized.

Bolt-on (min. interrupting rating in amps)			No. of barrels
Amps	Regular	Regular	
30	5BCLS-30* (100)†	—	1
70	5BCLS-2R (180)†	JCL-B-2R (165)†	
100	5BCLS-3R (270)†	JCL-B-3R (220)†	
130	5BCLS-4R (360)†	JCL-B-4R (320)†	
150	5BCLS-5R (450)†	JCL-B-5R (410)†	
170	5BCLS-6R (540)†	JCL-B-6R (480)†	
200	5BCLS-9R (740)†	JCL-B-9R (720)†	
230	5BCLS-12R (1080)†	JCL-B-12R (970)†	
390	5BCLS-18R (1500)†	JCL-B-18R (1430)†	2
450	5BCLS-24R (2200)†	JCL-B-24R (1880)†	
600	5BCLS-32R (3000)†	—	
650	5BCLS-36R (3200)†	—	
800	5BCLS-44R (3600)†	—	

* Does not comply with ANSI C37.46 for "R" rating.
† Not UL Recognized.

GE Limitamp (min. interrupting rating in amps)			No. of barrels
Amps	Bolt-on	Bolt-on	
30	—	—	1
70	5MCLS-2R-A (180)	5MCLS-2R-B (180)	
100	5MCLS-3R-A (270)	5MCLS-3R-B (270)	
130	5MCLS-4R-A (360)	5MCLS-4R-B (360)	
150	5MCLS-5R-A (450)	5MCLS-5R-B (450)	
170	5MCLS-6R-A (540)	5MCLS-6R-B (540)	
200	5MCLS-9R-A (850)	5MCLS-9R-B (850)	
230	5MCLS-12R-A (1150)	5MCLS-12R-B (1150)	
390	5MCLS-18R-A (1725)	5MCLS-18R-B (1725)	2
450	5MCLS-24R-A (2350)	5MCLS-24R-B (2350)	

* Does not comply with ANSI C37.46 for "R" rating.
† Not UL Recognized.

5CLS, JCL, JCL-A, 5ACLS and 5HCLS Type mountings — in (mm)

Catalog no.	Hole centers A	Hole centers B	Overall length C	Hole inset D	Hole ctr. E	Contact hgt. F	Overall hgt. G	BIL (kV)
Disconnect single barrel†								
5CLE-GDM-D	15.24 (387.1)	6 (152.4)	25 (647.7)	0.62 (15.7)	1.75 (44.4)	4.5 (114.3)	11.72 (297.7)	60
5CLE-PDM-D								
5HLE-PDM-D	16.25 (412.8)		23 (584.2)					
5HLE-GDM-D								
Disconnect double barrel†								
5CLE-GDM-E	15.24 (387.1)	6 (152.4)	25 (647.7)	0.62 (15.7)	1.75 (44.4)	4.5 (114.3)	15.28 (388.1)	60
5CLE-PDM-E								
5HLE-GDM-E	16.25 (412.8)		23 (584.2)					
5HLE-PDM-E								
Non-disconnect single barrel								
5CLE-GNM-D	15.24 (387.1)	6 (152.4)	25 (635.0)	0.62 (15.7)	1.75 (44.4)	4.5 (114.3)	8.79 (223.3)	60
5CLE-PNM-D								
5HLE-GNM-D	16.25 (412.7)		23 (584.2)					
5HLE-PNM-D								
Non-disconnect double barrel								
5HLE-PNM-E	16.25 (412.7)	6 (152.4)	25 (635.0)	0.62 (15.7)\	1.75 (44.4)	4.5 (114.3)	12.48 (317.0)	60
5HLE-GNM-E								

Data sheet no. 6001

7.2 kV R-Rated fuses

Catalog symbols/construction

- 8CLS-_R/Standard (2R - 6R)
- 8ACLS-_R/AMPGARD Hookeye* (2R - 6R)
- 7BCLS-_R/Bolt-on (2R - 6R)

* For use in 400 amp AMPGARD motor starters.

Ratings

- Volts
  - 7.2 kV (nominal)
  - 8.3 kV (max design 70-170 A standard and AMPGARD Hookeye)
  - 7.2 kV (max design 70-170 A bolt-on)
- Amps 70-170 A
- Interrupting ratings
  - 50 kA Sym.
  - 80 kA Asym.

Recommended fuseclips and holders for standard constructions

Amps	Description	BIL (kV)	Cat. No.
Fuseclips			
70-170	3″ Enclosed fuseclip*	—	A3354730
	3″ Open fuseclip		1A0065
	3″ Spring loaded open fuseclip		9078A67G04
Fuse holders for 7CLS and 8CLS			
70-170	Non-disconnect holder, porcelain	75	8HLE-PNM-D
	Non-disconnect holder, glass polyester		8HLE-GNM-D
	Disconnect holder, porcelain		8HLE-PDM-D
	Disconnect holder, glass polyester		8HLE-GDM-D

* Single barrel only, not sold in pairs.

Dimensions — in (mm)

Construction	Amps	Dimension A	Dimension B	Dimension C
Standard	70-170	15.8 (401)	3 (76)	3 (76)
AMPGARD Hookeye				
Bolt-on		19.2 (488)	17.9 (455)	

Standard and AMPGARD Hookeye

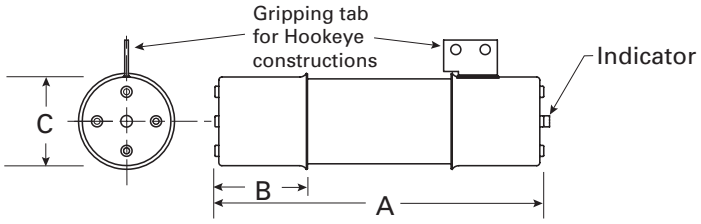

Bolt-on

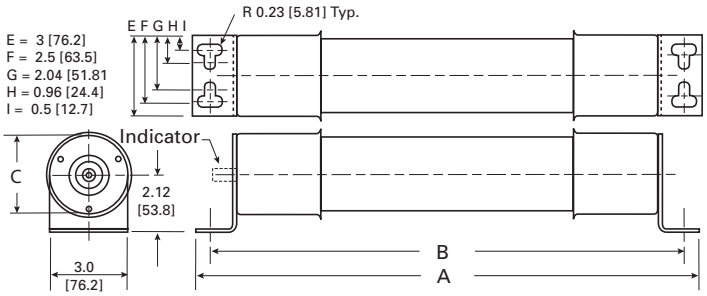

7.2 kV R-Rated fuse catalog numbers

Amps	"R" Designation	Mounting style (minimum interrupting rating in amps): Standard	AMPGARD Hookeye	Bolt-on	No. of barrels
70	2R	8CLS-2R (160)	8ACLS-2R (160)	7BCLS-2R (160)	1
100	3R	8CLS-3R (250)	8ACLS-3R (250)	7BCLS-3R (250)	
130	4R	8CLS-4R (325)	8ACLS-4R (325)	7BCLS-4R (325)	
150	5R	8CLS-5R (390)	8ACLS-5R (390)	7BCLS-5R (390)	
170	6R	8CLS-6R (500)	8ACLS-6R (500)	7BCLS-6R (500)	

E-Rated PT medium voltage fuses

Dimensions — in (mm)

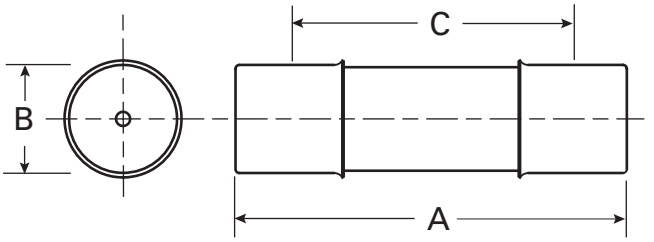

Catalog symbols (by maximum voltage rating)

- 2.475 kV
  - 2NCLPT-_
- 3.6 kV
  - 3.6ABCNA_
  - 3.6ABWNA_
  - 3.6CAV_
- 5.5 kV
  - JCW-_
  - 5CLPT-_E
  - 5NCLPT-_E
  - 5NCLPT-_E-A
  - 5.5ABWNA_E
  - 5.5AMWNA_E
  - 5.5CAV_E
  - 5.5CAVH_E
- 7.2 kV
  - 7.2ABWNA_
  - 7.2ABCNA_
  - 7.2AMWNA_E
  - 7.2CAV_
- 8.3 kV
  - 8CLPT-_E-A
  - 8NCLPT-_E
  - 8NCLPT-_E-A
  - 8NCLPT-_E-B
- 12 kV
  - 12ABCNA_
  - 12CAV_
- 15.5 kV
  - 15CLPT-_E
  - 15NCLPT-_E-A
  - 15NCLPT-_E-B
  - 15.5CAV_E
  - 15.5CAVH_E
- 17.5 kV
  - 17.5ABGNA_
  - 17.5CAV_
- 24 kV
  - 24ABGNA_
  - 24CAV_
- 25.5 kV
  - 25CLPT-_E
- 36 kV
  - 36ABGNA_
  - 36CAV_
- 38 kV
  - 38CAV_E
  - 38CAVH_E
  - 38CLPT-_E

Recommended fuseclip and block

Description	Catalog no.
Open fuseclip for 0.8 (20 mm) dia. fuses	1A1837
Single-pole open fuse block with #10-32 phil-slot screw terminals rated 2500 V, 5 A maximum and 63 kA withstand rating	PTFB-2500-JCD

Ratings*

- Volts 2.4 kV to 38 kV
- Amps 0.25 to 15 A
- Interrupting ratings 25 to 80 kA RMS Sym.

* See catalog number tables for voltages, ampacities and interrupting ratings by catalog number.

Agency information

- PT fuses conforming to the requirements for E-Rating meet the performance characteristics of IEEE/ANSI C37.46

Data sheet no. 6002

2.475 to 38 kV PT E-Rated fuses

Amps	Dimensions — in (mm) Length A	Diameter B	Clip centers C	Catalog no. (IR - kA) Indicating	Non-indicating	Recommended fuseclip
2.475 kV maximum system voltage						
0.25	4.5 (114)	0.8 (20)	3.9 (99)	—	2NCLPT-.25E (63)	1A1837
0.5				—	2NCLPT-.5E (63)	
1				—	2NCLPT-1E (40)	
2				—	2NCLPT-2E (40)	
5				—	2NCLPT-5E (25)	
3.6 kV maximum system voltage						
2	8.7 (221)	1.6 (41)	7.6 (193)	—	3.6CAV2 (50)	1A1837
3.15	5.6 (142)	1 (25)	4.4 (112)	—	3.6ABWNA3.15 (50)	A3354705
3.15	7.7 (195)		6.5 (165)	—	3.6ABCNA3.15 (50)	
6.3	5.6 (142)		4.4 (112)	—	3.6ABWNA6.3 (50)	
6.3	7.7 (195)		6.5 (165)	—	3.6ABCNA6.3 (50)	
10				—	3.6ABCNA10 (50)	
5.5 kV maximum system voltage						
0.5	5.6 (142)	0.8 (20)	4.8 (122)	—	5.5AMWNA0.5E (50)	1A1837
0.5		1 (25)	4.4 (112)	—	5.5ABWNA0.5E (50)	A3354705
0.5	7.4 (188)	1.6 (41)	6.2 (157)	5.5CAVH0.5E (50)	JCW-1/2E (40)	1A0835
0.5	9.5 (241)	1.6 (41)	8.1 (206)	5CLPT-.5 (50)†	5NCLPT-.5E-A (50)	1A0835
1	5.6 (142)	1 (25)	4.4 (112)	—	5.5ABWNA1E (50)	A3354705
1		0.8 (20)	4.8 (122)	—	5.5AMWNA1.0E (50)	1A1837
1	7.4 (188)	1.6 (41)	6.2 (157)	5.5CAVH1E (50)	JCW-1E (40)	1A0835
1	9.5 (241)		8.1 (206)	5CLPT-1 (50)†	5NCLPT-1E-A (50)	
1.5				5CLPT-1.5 (50)†	—	
2	5.6 (142)	1 (25)	4.4 (112)	—	5.5ABWNA2E (50)	A3354705
2		0.8 (20)	8.1 (206)	—	5NCLPT-2E (50)	1A1837
2			4.8 (122)	—	5.5AMWNA2.0E (50)	
2	7.4 (188)	1.6 (41)	6.2 (157)	5.5CAVH2E (50)	JCW-2E (40)	1A0835
3	5.6 (142)	1 (25)	4.4 (112)	—	5.5ABWNA3E (50)	A3354705
3		0.8 (20)	4.8 (122)	—	5.5AMWNA3.0E (50)	1A1837
3	9.5 (241)	1.6 (41)	8.1 (206)	5CLPT-3E (50)	5NCLPT-3E (50)	1A0835
3	7.4 (188)		6.2 (157)	—	JCW-3E (40)	
4	5.6 (142)	0.8 (20)	4.8 (122)	—	5.5AMWNA4.0E (50)	1A1837
5	9.5 (241)	1.6 (41)	8.1 (206)	5CLPT-5E (50)	5NCLPT-5E-A (50)	1A0835
5	5.6 (142)	1 (25)	4.4 (112)	—	5.5ABWNA5E (50)	A3354705
5		0.8 (20)	4.8 (122)	—	5.5AMWNA5.0E (50)	1A1837
5	7.3 (185)	1.6 (41)	5.9 (150)	—	JCW-5E (40)	1A0835
10	9.5 (241)		8.1 (206)	5CLPT-10E (50)	5NCLPT-10E (50)	
15	7.4 (188)		6.2 (157)	—	5.5CAV15E (50)	

† Due to manufacturing variations, this fuse does not comply with ANSI C37.46 for "E" rating.

2.475 to 38 kV PT E-Rated fuses

Amps	Dimensions — in (mm) Length A	Diameter B	Clip centers C	Catalog no. (IR - kA) Indicating	Non-indicating	Recommended fuseclip
7.2 kV maximum system voltage						
0.5	5.6 (142)	0.8 (20)	4.8 (122)	—	7.2AMWNA0.5E (50)	1A1837
1					7.2AMWNA1.0E (50)	
2					7.2AMWNA2.0E (50)	
2	8.7 (221)	1.6 (41)	7.5 (190)		7.2CAV2 (40)	1A0835
3	5.6 (142)	0.8 (20)	4.8 (122)		7.2AMWNA3.0E (50)	1A1837
3.15	5.6 (142)	1 (25.4)	4.4 (112)		7.2ABWNA3.15 (45)	A3354705
3.15	7.7 (195)		6.5 (165)		7.2ABCNA3.15 (45)	
4	5.6 (142)	0.8 (20)	4.8 (122)		7.2AMWNA4.0E (50)	1A1837
4	8.7 (221)	1.6 (41)	7.5 (190)		7.2CAV4 (40)	1A0835
5	5.6 (142)	0.8 (20)	4.8 (122)		7.2AMWNA5E (50)	1A1837
6	8.7 (221)	1.6 (41)	7.5 (190)		7.2CAV6 (40)	1A0835
6.3	5.6 (142)	1 (25.4)	4.4 (112)		7.2ABWNA6.3 (45)	A3354705
6.3	7.7 (195)		6.5 (165)		7.2ABCNA6.3 (45)	
10	8.7 (221)	1.6 (41)	7.5 (190)		7.2CAV10 (40)	1A0835
8.3 kV maximum system voltage						
0.5	9.5 (241)	1.6 (41)	8.1 (206)	8CLPT-.5 (50)†	8NCLPT-.5E-A (50)	1A0835
1	5 (127)	1.1 (28)	4 (102)	—	8NCLPT-1E (50)	A3354705
1	9.5 (241)	1.6 (41)	8.1 (206)		8NCLPT-1E-A (50)	1A0835
2	8 (203)	0.8 (20)	7.2 (183)		8NCLPT-2E (25)	1A1837
2	9.5 (241)	1.6 (41)	8.1 (206)		8NCLPT-2E-A (50)	1A0835
3	12.9 (328)		11.5 (292)	8CLPT-3E (50)	8NCLPT-3E-B (50)	
4	8 (203)	0.8 (20)	7.2 (183)	—	8NCLPT-4E (25)	1A1837
5	5 (127)	1.1 (28)	4 (102)		8NCLPT-5E (50)	A3354705
5	12.9 (328)	1.6 (41)	11.5 (292)	8CLPT-5E (50)	8NCLPT-5E-B (50)	1A0835
8	5 (127)	1.1 (28)	4 (102)	—	8NCLPT-8E	A3354705
10	12.9 (328)	1.6 (41)	11.5 (292)	8CLPT-10E (50)	8NCLPT-10E-B (50)	1A0835
12 kV maximum system voltage						
2	8.7 (221)	1.6 (41)	7.5 (190)	—	12CAV2 (40)	1A0835
3.15	7.7 (195)	1 (25)	6.5 (165)		12ABCNA3.15 (45)	A3354705
15.5 kV maximum system voltage						
0.5	12.9 (328)	1.6 (41)	11.5 (292)	15.5CAVH0.5E (80)	15NCLPT-.5E-A (50)	1A0835
1	12.9 (328)		11.5 (292)	15.5CAVH1E (80)	15NCLPT-1E-A (50)	
2	12.9 (328)		11.5 (292)	15.5CAVH2E (80)	15NCLPT-2E (50)	
3	12.9 (328)		11.5 (292)	—	15.5CAV3E (80)	
3	17.6 (447)		16.1 (409)	—	15NCLPT-3E (50)	
3	17.6 (447)		16.1 (409)	15CLPT-3E (50)	—	
5	12.9 (328)		11.5 (292)	—	15.5CAV5E (80)	
5	17.6 (447)		16.1 (409)	15CLPT-5E (50)	15NCLPT-5E (50)	
7	12.9 (328)		11.5 (292)	—	15.5CAV7E (80)	
10	17.6 (447)		16.1 (409)	15CLPT-10E (50)	15NCLPT-10E (50)	
17.5 kV maximum system voltage						
2	8.7 (221)	1.6 (41)	7.5 (190)	—	17.5CAV2 (40)	1A0835
4					17.5CAV4 (40)	
6					17.5CAV6 (40)	
10					17.5CAV10 (40)	

† Does not comply with ANSI C37.46 for "E" rating.

Data sheet no. 6002

2.475 to 38 kV PT E-Rated fuses

Amps	Dimensions — in (mm) Length A	Diameter B	Clip centers C	Catalog no. (IR - kA) Indicating	Non-indicating	Recommended fuseclip
24 kV maximum system voltage						
2	13.49 (340)	1.6 (41)	12.2 (310)	—	24CAV2 (40)	1A0835
3				—	24CAV3 (40)	
4				—	24CAV4 (40)	
25.5 kV maximum system voltage						
0.5	17.6 (447)	1.6 (41)	16.1 (410)	25CLPT-.5 (43.5)†	—	1A0835
1				25CLPT-1 (43.5)†	—	
36 kV maximum system voltage						
2	17.3 (439)	1.6 (41)	16.1 (410)	—	36CAV2 (40)	1A0835
4				—	36CAV4 (40)	
38 kV maximum system voltage						
0.5	17.3 (439)	1.6 (41)	16.1 (409)	38CAVH0.5E (40)	—	1A0835
0.5	18.6 (472)		17.1 (434)	38CLPT-0.5 (43.5)†	—	
1	17.3 (439)		16.1 (409)	38CAVH1E (40)	—	
2				38CAVH2E (40)	—	
4				—	38CAV4E (40)	

† Does not comply with ANSI C37.46 for "E" rating.

CLPT Type mountings and hardware

Amps	Fuse mounting type*	BIL (kV)	Catalog no. Mounting (including live parts, end fittings)** Porcelain insulator	Glass-polyester insulator	Live parts (including end fittings)***	End fittings (disconnect only)
5.5 kV maximum (4.8 kV nominal)†						
0.5–10	Non-disconnect	60	5CLPT-PNM-A	5CLPT-GNM-A	CLPT-NL	—
	Disconnect††		5CLPT-PDM-A	5CLPT-GDM-A	CLPT-DL	CLPT-DF
8.3 kV maximum (7.2 kV nominal)†						
0.5–2	Non-disconnect	75	8CLPT-PNM-A	8CLPT-GNM-A	CLPT-NL	—
	Disconnect††		8CLPT-PDM-A	8CLPT-GDM-A	CLPT-DL	CLPT-DF
3–10	Non-disconnect		8CLPT-PNM-B	8CLPT-GNM-B	CLPT-NL	—
	Disconnect††		8CLPT-PDM-B	8CLPT-GDM-B	CLPT-DL	CLPT-DF
15.5 kV maximum (14.4 kV nominal)						
0.5–2	Non-disconnect	95	15CLPT-PNM-A	15CLPT-GNM-A	CLPT-NL	—
	Disconnect††		15CLPT-PDM-A	15CLPT-GDM-A	CLPT-DL	CLPT-DF
3–10	Non-disconnect		15CLPT-PNM-B	15CLPT-GNM-B	CLPT-NL	CLPT-DF
	Disconnect††		15CLPT-PDM-B	15CLPT-GDM-B	CLPT-DL	—
25.5 kV Maximum (23 kV Nominal)						
0.5–1	Non-disconnect	150	25CLPT-PNM-A	—	25CLPT-NL	—
	Disconnect††		25CLPT-PDM-A		25CLPT-DL	CLPT-DF
38 kV Maximum (34.5 kV Nominal)						
0.5	Disconnect††	N/A	Not applicable	Not applicable	CLPT-NL	CLPT-DF
	Non-disconnect		38CLPT-PNM-A		CLPT-DL	—

* See page 7-35 for dimensions and diagrams of typical mountings.
**End fittings supplied only when required.
† Refers to 5CLPT, 5NCLPT, 8CLPT and 8NCLPT-A or -B fuses only.
††Disconnect mountings provide a means for fuse extraction only. Do not use a disconnect mounting for load switching or fuse removal while energized.

HVA, HVB, HVJ, HVL, HVR, HVT, HVU, HVW and HVX fast-acting PT fuses

Medium voltage, non-time delay, fast-acting fuses.

Ratings*

- Volts 1-10 kV
- Amps 1/16-10 A

* See catalog number table for possible volt/amp combinations.

Features

- Physical size varies with electrical rating of fuse to prevent overfusing
- Space-saving size

Typical applications

- Medium voltage instrument and circuit protection

Test specifications

Catalog symbol	Percent load	Opening time
HVA, HVB, HVJ, HVL	110	4 hours (min)
	135	1 hour (max)
HVR, HVT, HVU, HVW, HVX	100	4 hours (min)
	150	1 hour (max)

Recommended fuseclips and blocks

Fuse catalog symbol	Block catalog no.	Fuseclip catalog no.
HVA, HVR	4528*	5960
HVB, HVT	4529*	
HVJ, HVU	—	4180
HVL, HVX		

* Use #8 screws.

Catalog symbol	kV	Amps	Max. IR (amps)	Dimensions — in (mm) Diameter	Dimensions — in (mm) Length
HVA	1	1/16, 1/10, 1/8, 2/10, 1/4, 3/8, 1/2, 3/4, 1, 1-1/2, 2, 3, 4, 6, 10	20 DC / 30 AC	0.4 (10)	3 (76)
HVB	2.5	1/2, 3/4, 1, 1-1/2, 2, 3	8 DC / 12 AC		4.5 (114)
HVJ	5	1/16, 1/8, 1/4, 1/2, 3/4, 1, 1-1/2, 2, 4, 6*	4 DC / 6 AC	0.8 (21)	5 (126.9)
HVL	10	1/16, 1/8, 1/4, 1/2, 1, 1-1/2, 2, 3*	2 DC / 3 AC		10 (254)
HVR	1	1/2, 1, 2, 3, 4, 5	500 AC	0.4 (10)	3 (76)
HVW	1.2	1, 2, 3, 4, 5, 8	4 DC / 167 AC		2.3 (57)
HVT	2.5	1/2, 1, 2, 3, 5	500 AC		4.5 (114)
HVU	5	1/2, 1, 2, 3, 4, 5	500 AC	0.8 (20)	5 (127)
HVX	10	1/2, 1, 3, 5	1200 AC		10 (254)

* AC only.

Catalog number build-a-code

Fuse catalog symbol Amps

_ _ _ _ _ - _ _ _

E.g., HVB-3/4 (2.5 kV 3/4 amp fuse)

Data sheet no. 6003

British standard dimensioned IEC fuses for motor circuit protection

The Bussmann series IEC motor fuses are designed to meet the specific requirements necessary for motor protection. During the starting cycle of direct on-line motors, the fuse elements will reach a considerably higher temperature than during normal operation; (this is due to the high amount of current the motor will draw as it starts, typically, six times its normal load current value). This results in expansion and contraction of the fuse elements and could cause premature operation of the fuse.

Bussmann series motor fuses encompass an advanced design to minimize this effect. This, therefore, negates the need to over specify the fuse rating due to high values of motor starting current.

These motor fuses operate extremely quickly under heavy fault currents, resulting from the time / current characteristic. Low power dissipation ensures low temperature rise, important in multi-tier starters for example. Switching (arc), voltages are lower than permitted values, therefore, 5.5 kV fuses are also suitable for 4.8 kV and 2.4 kV circuits.

Catalog symbol	kV	IR (kA)	Amps/rating	Dimensions — in (mm) Length	Dimensions — in (mm) Diameter	Dimension standard
3.6WJON6	3.6	50	5, 6.3, 10, 16, 20, 25, 31.5, 40, 50	7.6 (192)	1.4 (36)	BS 2692 (TA1) Interchangeable with GEC Type K2 PA
3.6WDOH6			50, 63, 80, 100, 125		2 (51)	BS 2692 (TA1) or DIN 43625
3.6WFOH6			160, 200		3 (76)	
3.6WDLSJ			50, 63, 80, 100, 125	11.5 (292)	2 (51)	DIN 43625
3.6WFLSJ			160, 200		3 (76)	
3.6WDFHO			50, 63, 80, 100, 125	10 (254)	2 (51)	BS 2692 (TA2)
3.6WFFHO			160, 200		3 (76)	
3.6WKFHO			250, 315, 355, 400			
5.5VFNHA	5.5	60	2R, 3R, 4R, 6R	15.9 (403)		ANSI R-Rated
5.5VKNHA			9R, 12R, 18R, 24R			
7.2WFNHO	7.2	40	25, 31.5, 40, 50, 63, 80, 100, 125, 160			BS 2692 (TA4)
7.2WKNHO			200, 224, 250, 315			
7.2WFMSJ		63	25, 31.5, 40, 50, 63, 80, 125, 160	17.4 (442)		DIN 43625
7.2WKMSJ			200, 224, 250, 315, 355			

Catalog number build-a-code

Fuse catalog symbol Amps

_ _ _ _ _ - _ _ _

E.g., 3.6WKFHO-315 (315 amp 3.6 kV fuse)

DIN dimensioned IEC fuses for transformer protection

DIN dimension fuses to Specification DIN 43625 covering current-limiting fuses with performance in compliance with IEC 60282-1. These are in accordance with the R10 and, in some cases, the R20 series of preferred numbers.

Ratings*

- Volts 3.6-36 kV
- Amps 6.3-100 A
- Interrupting ratings 20-50 kA

* See catalog number table for possible volt/amp combinations.

Agency information

- Compliant with DIN dimensional standard DIN 43625, VDE 0670 part 4, VDE 0670 part 40Z and with IEC 60282-1 (2005)

Features

- DIN dimensioned for retrofitting in existing hardware
- Open fuse indicator for ease in troubleshooting
- Designed for use in IEC equipment

Typical applications

- Medium voltage IEC designed equipment

Recommended fuseclips

- Catalog numbers 270303, A3354745, see page 7-36.

Dimensions — in (mm)

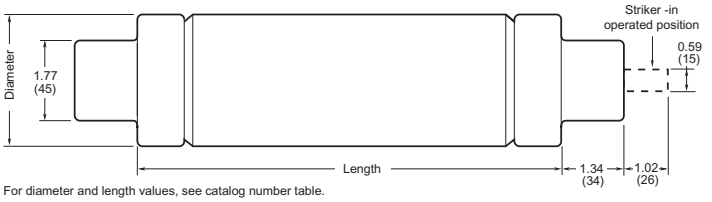

For diameter and length values, see catalog number table.

kV	Catalog symbol	Amps	Dimensions — in (mm) Diameter	Dimensions — in (mm) Length	IR RMS Sym. (kA)
3.6	3.6ADOSJ	6.3, 10, 16, 20, 25, 31.5, 40	2.0 (51)	7.6 (192)	40
	3.6WDOSJ	50, 63, 80, 100, 125			50
	3.6WFOSJ	160, 200	3.0 (76)		
	3.6ADLSJ	25, 40	2.0 (51)	11.5 (292)	
	3.6WKLSJ	250, 315, 400	3.0 (76)		
7.2	7.2TDLSJ	6.3, 10, 16, 20, 25, 31.5, 40, 50, 63	2.0 (51)		40
	7.2TFLSJ	80, 100, 125, 160	3.0 (76)		
12	12TDLEJ	6.3, 10, 16, 20, 25, 31.5, 40, 50, 63	2.0 (51)	11.5 (292)	63
	12THLEJ	80, 100	2.5 (64)		
	12TKLEJ	125	3.0 (76)		
	12TXLEJ*	160, 200	3.5 (88)		
17.5	17.5TDLSJ*	6.3, 10, 16, 20, 25, 31.5, 40	2.0 (51)		35.5
	17.5TFLSJ*	50	3.0 (76)		
	17.5TDMEJ	6.3, 10, 16, 20, 25, 31.5, 40, 50, 63	2.0 (51)	17.4 (442)	50
	17.5THMEJ	80, 100	2.5 (64)		
	17.5TKMEJ	125	3.0 (76)		
24	24TDMEJ	6.3, 10, 16, 20, 25, 31.5, 40, 50	2.0 (51)		50
	24THMEJ	63	2.5 (64)		
	24TFMEJ	80, 100*[1]	3.0 (76)		
	24TXMEJ*	125[2], 160	3.5 (88)		31.5
36	36TDQSJ	3.15[3], 6.3, 10, 16, 20, 25	2.0 (51)	21.2 (537)	35.5
	36TFQSJ	31.5, 40, 50	3.0 (76)		
	36TXQEJ*	63	3.5 (88)		20

* Not compliant with VDE 0670, part 402.
1 IR RMS Sym. is 63 kA
2 IR RMS Sym. is 40 kA
3 IR RMS Sym. is 20 kA

Catalog number build-a-code

Fuse catalog symbol Amps

_ _ _ _ _ - _ _ _

E.g., 17.5THMEJ-80 (17.5 kV 80 amp fuse)

Expulsion fuse links for use in high voltage distribution cut-outs

Expulsion fuse links available in a wide range of options from 15 to 72 kV in ANSI Type T and K characteristics. Expulsion fuse link current ratings should be selected on the basis of maximum expected transient no-damage currents rather than on full load current. In addition, the selection of higher current ratings will reduce the possibility of supply interruption due to transient surges such as those due to lightning strikes.

Links should be handled with a reasonable degree of care when installing. Excessively rough handling may damage the element.

It is normal, under certain fault conditions, for arc extinguishing material and/or metal particles to be expelled from the fuse assembly. It is therefore recommended that reasonable precautions be taken to prevent the installation being approached by unauthorized persons.

When ordering, select from the table below the characteristics in each column you need your fuse link to have.

Example: 15TB30 is a 15 kV, ANSI C 37-42 compliant fuse with a fixed button head terminal that is rated for 30 amps.

The fuse link assembly for a given range is standard to all rated voltages. The exception is the tail length that's varied to suit the expulsion carrier dimensions of different ratings.

Ratings*

- Volts 15-72 kV
- Amps 1-100 A
- Interrupting rating 8 kA approximate

* See catalog number configuring table for possible volt/amp combinations.

Agency information

- Type T, complies with ANSI C37-42
- Type K, complies with ANSI C37-42

Features

- Wide range of options available from 15 kV to 72 kV in ANSI T and K characteristics.
- Extra rapid option also available.

Typical applications

- Primary side transformer protection
- Feeder protection
- Capacitor bank protection

Fuse label color coding

Type	Color	Type	Color
XA	Pink	T	Green
K	Yellow	S	—

Dimensions — mm (in)

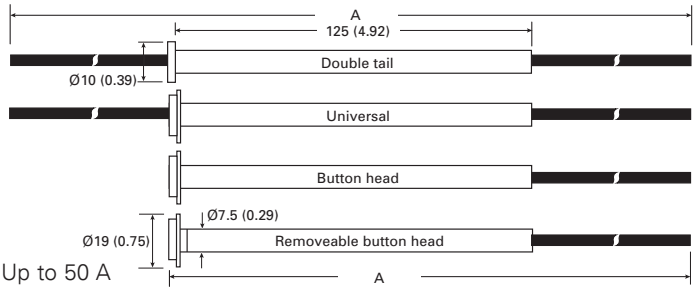

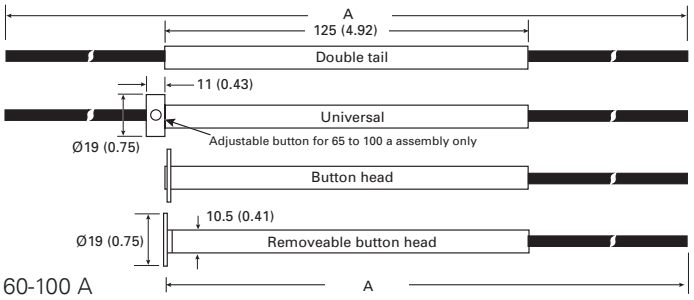

Link kV	A	Link kV	A
15	533 (21)	46	787 (31)
25	660 (26)	72	1016 (40

Notes: Type BR is similar to button head shown, except that the button head is attached via a 1/4" UNF thread. Tails can be cut to desired length.

Catalog number configuration table

Available voltage ratings (kV)	1st letter = current characteristics type	2nd letter = termination type	Available amps ratings
15, 25, 46, 72	**T** = complies with ANSI C 37-42 requirements for slow acting T characteristics	**B** = a fixed NEMA button head link	1, 2, 3, 4, 5, 6, 7.5, 8, 10, 12, 15, 20, 25, 30, 40, 50, 60, 65, 75, 80, 100
	K = complies with ANSI C 37-42 requirements for fast acting K characteristics	**U** = a universal link, with double tail and slip off NEMA button head	
	XA = this type of expulsion fuse link has an extra rapid characteristic. It is suitable for applications where a high degree of system protection is required at the expense of discrimination.	**D** = double tailed link without NEMA button head	
	S = Solid links rated at 100 amps are also available in both button head and universal versions for fitting into expulsion fuse carriers where required. These can be ordered in a similar way using the abbreviation S, e.g. 15SB, etc.	**BR** = as pattern B but the button head is attached via a 1/4" UNF thread to allow use of an extension rod	

FL — Type H, and EEI-NEMA Type K and T fuses

Medium voltage fuses: Type H (high surge), EEI-NEMA Type K (fast-acting), EEI-NEMA Type T (time-delay).

High-surge, Type H fuses are manufactured in ratings of 1, 2, 3, 5, and 8 amps and were developed for primary fusing of small-sized transformers. Type H links are manufactured in the universal button head design.

Type N fuses conform to previous NEMA standards and are superseded by Type K and T links. Type N fuses are manufactured in the universal button design in ratings of 5 through 200 amps for use in standard NEMA dimensioned cutouts rated through 27 kV.

Ratings*

- Volts rated to 27 kV
- Amps 1-200 A

* See catalog number table for type and amp combinations.

Features

- Wide range of EEI-NEMA type fuse links for use in open fuse cutouts
- Voltage rating up to 27 kV for flexible application
- Can be coordinated with other overcurrent protective devices for sectionalizing to isolate feeder branches

Typical applications

- Medium voltage fused cutouts

Type K universal silver-element cutout fuses rated to 27 kV

Catalog no.	
Fast-acting EEI-NEMA Type K	**Amps**
Non-removable button-head for standard open or enclosed cutouts	
FL12K8	8
FL12K10	10
FL12K12	12
FL12K15	15
FL12K25	25
FL12K50	50

Type H (high-surge), K and T universal tin element cutout fuses rated to 27 kV

Catalog no.			
	EEI-NEMA		
Type H high surge	**Type K fast-acting**	**Type T time-delay**	**Amps**
Non-removable button-head for standard open or enclosed cutouts			
FL11H1	FL11K1	FL11T1	1
FL11H2	FL11K2	FL11T2	2
FL11H3	FL11K3	FL11T3	3
FL11H5	FL11K5	FL11T5	5
—	FL11K6	FL11T6	6
FL11H8	FL11K8	FL11T8	8
—	FL11K10	FL11T10	10
—	FL11K12	FL11T12	12
—	FL11K15	FL11T15	15
—	FL11K20	FL11T20	20
—	FL11K25	FL11T25	25
—	FL11K30	FL11T30	30
—	FL11K40	FL11T40	40
—	FL11K50	FL11T50	50
—	FL11K65	FL11T65	65
—	FL11K80	FL11T80	80
—	FL11K100	FL11T100	100
—	FL11K140	FL11T140	140
—	FL11K200	FL11T200	200
Removable button-head for cutouts requiring removable-button links*			
—	FL3K1	FL3T1	1
—	FL3K2	FL3T2	2
—	FL3K3	FL3T3	3
—	FL3K5	FL3T5	5
—	FL3K6	FL3T6	6
—	FL3K8	FL3T8	8
—	FL3K10	FL3T10	10
—	FL3K12	FL3T12	12
—	FL3K15	FL3T15	15
—	FL3K20	FL3T20	20
—	FL3K25	FL3T25	25
—	FL3K30	FL3T30	30
—	FL3K40	FL3T40	40
—	FL3K50	FL3T50	50
—	FL3K65	FL3T65	65
—	FL3K80	FL3T80	80
—	FL3K100	FL3T100	100
—	FL3K140	FL3T140	140
—	FL3K200	FL3T200	200

* Adapter-type removable-button links with ferrule adapter to convert to double-leader links are available in K and T types. Order by description.

PT fuse mountings — in (mm)

Catalog no.	Hole ctrs. A	Hole ctrs. B	Overall length C	Hole Inset D	Hole ctrs. E	Contact hgt. F	Overall hgt. G	BIL (kV)
5.5 kV Disconnect†								
5CLPT-GDM-A	9.37 (238)	6 (152.4)	18.63 (473.2)	0.75 (19)	1.75 (44.4)	4.5 (114.3)	9.56 (242.8)	60
5CLPT-PDM-A								
5.5 kV Non-disconnect								
5CLPT-GNM-A	9.37 (238)	6 (152.4)	18.63 (473.2)	0.75 (19)	1.75 (44.4)	4.5 (114.3)	6.94 (176.2)	60
5CLPT-PNM-A								
8.3 kV Disconnect†								
8CLPT-GDM-A	9.37 (238)	6 (152.4)	18.63 (473.2)	0.75 (19)	1.75 (44.4)	7 (177.8)	12.06 (306.3)	75
8CLPT-GDM-B								
8CLPT-PDM-A								
8CLPT-PDM-B	12.74 (323.6)		22 (558.8)					
8.3 kV Non-disconnect								
8CLPT-GNM-A	9.37 (238)	6 (152.4)	18.63 (473.2)	0.75 (19)	1.75 (44.4)	7 (177.8)	9.44 (239.8)	75
8CLPT-PNM-A								
8CLPT-GNM-B	12.75 (323.8)		22 (558.8)					
8CLPT-PNM-B								
15.5 kV Disconnect†								
15CLPT-GDM-A	12.74 (323.6)	6 (152.4)	22 (558.8)	0.75 (19)	1.75 (44.4)	7 (177.8)	12.06 (306.3)	95
15CLPT-PDM-A								
15CLPT-GDM-B	17.46 (443.5)		26.63 (676.4)					
15CLPT-PDM-B								
15.5 kV Non-disconnect								
15CLPT-GNM-A	12.74 (323.6)	6 (152.4)	22 (558.8)	0.75 (19)	1.75 (44.4)	7 (177.8)	9.44 (239.8)	95
15CLPT-PNM-A								
15CLPT-GNM-B	17.46 (443.5)		26.63 (676.4)					
15CLPT-PNM-B								
25.5 kV Disconnect†								
25CLPT-PDM-A	19.12 (485.6)	7 (177.8)	26.63 (676.4)	0.75 (19)	1.75 (44.4)	12 (304.8)	17.06 (433.3)	150
25.5 kV Non-disconnect								
25CLPT-PNM-A	26.63 (676.4)	7 (177.8)	26.63 (676.4)	0.75 (19)	1.75 (44.4)	12 (304.8)	14.75 (374.6)	150

† Disconnect mountings provide a means for fuse extraction only. Do not use a disconnect mounting for load switching or fuse removal while energized.

Disconnect mountings††

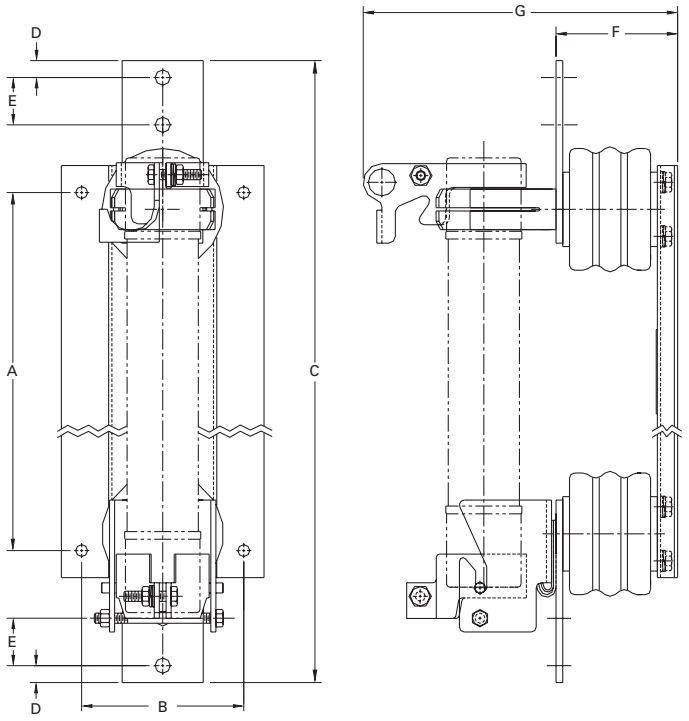

Non-disconnect mountings

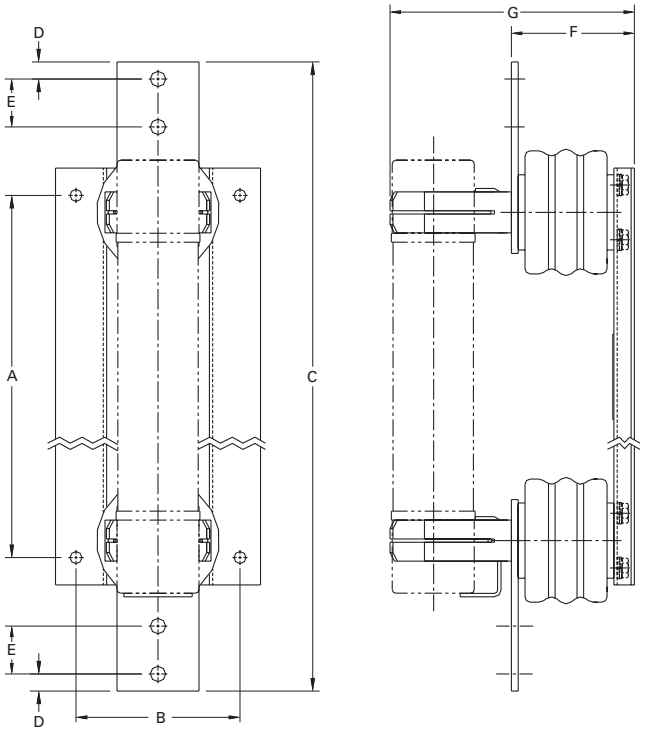

Recommended fuseclips

Description	Fuse dia. — in (mm)	Fig.	Clip Dimensions — in (mm) A	B	Ø C	D	E	F	G	Catalog no.
DIN clip and stirrup	1.8 (45)	1	—	—	—	—	—	—	—	270303
Enclosed fuseclip		2	3.5 (89)	2.5 (63)	1.8 (45)		4.4 (112)			A3354745*
Enclosed fuseclip	2 (51)	2	3.75 (95)	1.98 (50)	2.01 (51)	1.19 (30)	4.54 (115)	1.5 (38)	0.4 (10)	A3354710*
Enclosed fuseclip		2	4.14 (105)	2.45 (62)	3.01 (76)		5.64 (143)			A3354730*
Open fuseclip	3 (76)	3	See dimensions drawing							1A0065
Spring loaded open fuseclip		4								9078A67G04

* For single barrel applications only. Not sold in pairs.

Figure 1

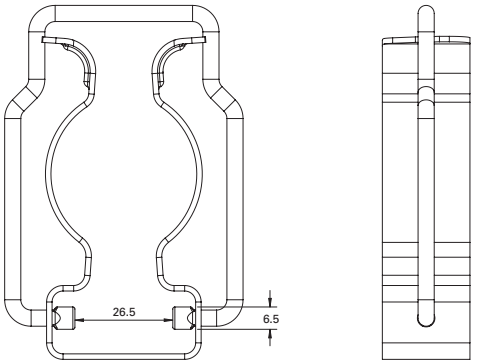

Figure 2

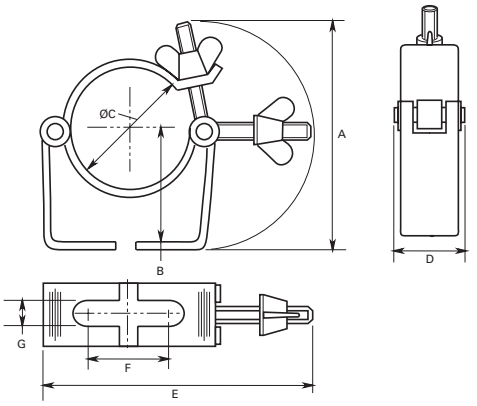

Figure 3

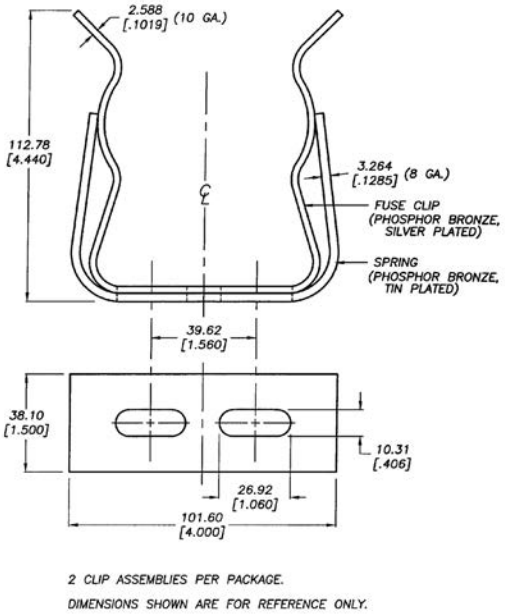

Figure 4

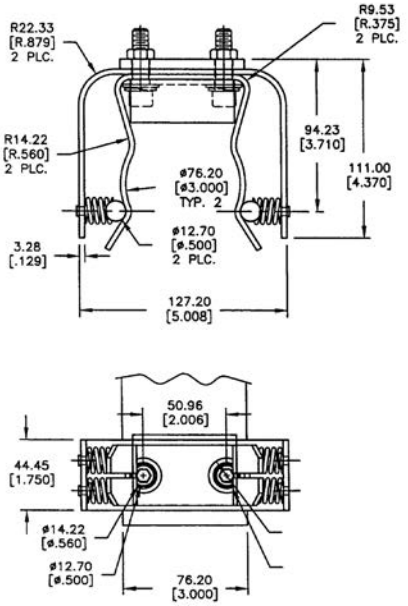

Save up to 65% panel space with Bussmann series power distribution fuse blocks

Contents

Fuse size/ class	Description	Section page
Quick guide		**2-3**
Control panel applications		
1/4" dia.		
	Panel mount blocks 8000, 3828, 4520, 4393	4-5
Class CC and midget		
	Modular blocks BCM, BMM	6-7
	DIN-Rail holders CHCC, CHM, NDNF1, OPM	8-13
	Panel mount blocks 3743, 4421, 4515	14
Class G		
	Panel mount blocks BG, G	15
14mm dia.		
	DIN-Rail holder CH14	16
22mm dia.		
	DIN-Rail holder CH22	17
	Modular block JM70100	18
	Modular power distribution blocks JM70100_ MW_	
Class H(K)/R		
	Modular blocks HM, RM	19-23
	Modular power distribution blocks HM___MW_, RM___MW_	24-27
Class J		
	DIN-Rail holders CH30J, CH60J	28
	Safety J™ JT(N)600	29
	Panel mount pyramid block JP	30
	Modular blocks JM60_	31-32
	Modular power distribution blocks JM60___MW_	33-34
Class T		
	300 V panel mount blocks T300	35-36
	600 V panel mount blocks T600	37-38
High speed fuses		
	Open center panel mount blocks BH, C5268, 1BS	39
NH fuses		
	DIN-Rail/panel mount blocks SD00, SD1, SD2, SD3, SD4, TD00, TD1, TD2, TD3	40
Through-panel applications		
5mm dia.	HTB	41
1/4" dia.	HJL, HK, HKP, HLD	42-43
13/32" dia.	HPC, HPC-D, HPD, HPF, HPG, HPM, HPS, HPS2	43-45
In-line applications		
5mm dia.	HHT	46
1/4" dia.	HFA, HFB, HEB-10, HHB, HR/HM, HRK	46-48
Class G	Single-pole HEC, HEG, HEH, HEJ non-breakaway	49
13/32" dia.	HEB single-pole breakaway and non-breakaway	51-52
Class CC	HEZ waterproof single-pole breakaway and non-breakaway	52
13/32" dia.	HEX, Class CC HEY dual-pole breakaway and non-breakaway	53-54

Quick guide

These tables list various fuse classes, sizes and voltages along with their available blocks and holders. Catalog pages are denoted parenthetically "()" next to their catalog symbol. E.g.: BCM603 (8-6) is in Section 8, page 6.

Fuse class/ size	Catalog symbol*	Amp range	Fuse blocks**	DIN—Rail holders**	In-line holders**	Panel mount holders**	Open center blocks**
Class CC	FNQ-R KTK-R LP-CC	Up to 30	BCM603 (8-6)	CHCC (8-8) OPM-NG (8-13) OPM-1038 (8-12)	HEY (8-53) HEZ (8-52)	HPF-RR (8-43) HPS-RR (8-45)	—
Class G	SC	1/2-15	BG301 (8-15)	—	HEG (8-49)	HPG-EE (8-44) HPS-EE (8-45)	—
		20	BG302 (8-15)		HEH (8-49)	HPS-JJ (8-45)	
		25-30	BG303 (8-15)		HEC (8-49)	HPS-FF (8-45)	
		35-60	G30060 (8-15)		HEJ (8-49)	—	
Class J	DFJ JKS LPJ	Up to 60	JM60030 (8-31) JM60030-_MW_, *** (8-33) JP60030-3 (8-30)	CH_J (8-28) JT(N)600_ (8-29)	—	—	—
		70-400	JM60100 (8-31) JM60100-_MW_*** (8-33)	—			1BS101 (8-39) BH-0111 (8-39)
		110-200	JM60200 (8-31 JM60200-_MW_*** (8-33)				—
		250-400	JM60400 (8-31) JM60400-_MW_*** (8-33)				BH-3145 (8-39)
		450-600	JM60600 (8-31)				BH-3144 (8-39)
250 V Class H/K5	NON	Up to 60	HM250__ (8-19) HM250__-_MW_*** (8-24)	CH14 (8-16)	—	—	—
		70-600	HM25___ (8-19)				
600 V Class H/K5	NOS	Up to 60	HM600__ (8-19) HM600__0-_-MW_*** (8-24)	—	—	—	—
		70-600	HM60___ (8-19)				
Class L	KLU KRP-C KRP-CL KTU	601-1200	51215 (1-pole)† 51235 (3-pole)†	—	—	—	—
250 V Class RK1/RK5	FRN-R KTN-R KWN-R LPN-RK	Up to 60	RM250__ (8-21) RM250__0-_MW_*** (8-26)	—	—	—	—
		70-600	RM25___ (8-21)				
600 V Class RK1/RK5	FRS-R KTS-R KWS-R LPS-RK	Up to 60	RM600__ (8-21) RM600__-_MW_*** (8-26)	—	—	—	—
		70-600	RM60___0 (8-21)				
300 V Class T	JJN	Up to 600	T30___ (8-35)	—	—	—	—
		250-400	T30400 (8-35)			BH-1133 (8-39)	
		450-600	T30600 (8-35)			BH-3144 (8-39)	
600 V Class T	JJS	Up to 60	T600__ (8-37)	—	—	—	—
		70-100	T60100 (8-37)			BH-0111 (8-39)	
		110-200	T60200 (8-37)			BH-1132 (8-39)	
		250-400	T60400 (8-37)			BH-1133 (8-39)	
		450-600	T60600 (8-37)			BH-3144 (8-39)	
Supplemental 13/32" x 1-1/2"	BAF FNM FNQ KLM KTK	Up to 30	BMM603 (8-6) 3743 (8-14) 4421 (8-14) 4515 (8-14)	CHM (8-8) NDNF1-WH (8-11) OPM-1038 (8-12) OPM-NG (8-13)	HEB (8-51) HEX (8-53)	HPC-D (8-43) HPD (8-44) HPF (8-43) HPG (8-44) HPM (8-44) HPM-D (8-44) HPS2 (8-45) HPS (8-45)	—
Supplemental 13/32" x 1-3/8"	BBS	Up to 30	BMM603 (8-6) 3743 (8-14) 4421 (8-14) 4515 (8-14)	—	HEH (8-49)	HPS-L (8-45)	—

Fuse class/ size	Catalog symbol*	Amp range	Fuse blocks**	DIN—Rail holders**	In-line holders**	Panel mount holders**	Open center blocks**
1/4 x 7/8	AGW	Up to 30	—	—	HHB (8-47) HM (8-48) HR (8-48) HRK (8-48)	HJL (8-42)	—
1/4 x 1	AGX	Up to 30	3828 (8-5) 4520 (8-5) 4393 (8-5)	—	HHB (8-47) HM (8-48) HR (8-48) HRK (8-48)	HJL (8-42)	—
1/4 x 1-1/4	ABC AGC GBB MDA MDL MDQ	Up to 30	S-8000 family (8-4)	—	HFA (8-46) HFB (8-47) HHB (8-47) HM (8-48) HR (8-48) HRK (8-48)	HKP (8-42) HTB (8-41) HK (8-42) HLD (8-43)	—
5x15mm	C515 C517 C518 C519 C520	Up to 7	—	—	HHT (8-46)	—	—
5x20mm	GDA GDB GDC GMA GMC GMD S500 S501 S505 S505H S506	Up to 15	—	—	HHT (8-46)	HTB (8-41)	—

* Refer to data sheets for applicable fuse voltage and interrupting ratings and agency information.
** Fuse blocks and fused switches are available in a variety of pole and terminal configurations, and voltage and withstand ratings (SCCRs).Refer to data sheets for complete catalog numbers.
*** This is a UL Listed power distribution fuse block, combining a fuse block and power distribution block into one unit.
† Not shown in this catalog. Contact customer service for details.

S-8000 bolt-in and snap-in mount open blocks for 1/4" x 1-1/4" fuses

Ratings

Volts 300 V

Amps 30 A max*

* See catalog number tables for agency limitations.

Agency information

- UL Recognized, Guide IZLT2, File E14853, CSA Certified Class 6225-01, File 47235, RoHS compliant, CE

Single pole anti-rotation pin

- Single-pole blocks may be ordered without the anti-rotational pin. Add an "X" to the number of poles, e.g., BK/S-8000-1X.

Catalog no.†	Poles	Terminal	Terminal angle	Max amps
Bolt-in mount				
S-8001-(poles)-R	1-12	Solder	0°	UL 30 CSA 21
S-8002-(poles)-R			40°	
S-8101-(poles)-R		3/16" quick-connect	0°	UL 20 CSA 13
S-8102-(poles)-R			40°	
S-8201-(poles)-R		1/4" quick-connect	0°	UL 30 CSA 16
S-8202-(poles)-R			40°	
S-8203-1-R	1	Side 1/4" quick-connect		
S-8301-(poles)-R	1-12	Screw	—	UL 30 A CSA 25A
Snap-in mount				
S-8001-1-SNP-R	1	Solder	0°	UL 25 CSA 21
S-8002-1-SNP-R			40°	
S-8101-1-SNP-R		3/16" quick-connect	0°	UL 20 CSA 13
S-8102-1-SNP-R			40°	
S-8201-1-SNP-R		1/4" quick-connect	0°	UL 20 CSA 16
S-8203-1-SNP-R			Side	

† Quantities for regular and bulk (BK/ prefix) catalog numbers varies with the number of poles. Contact customer satisfaction team for details.

Mounting dimensions — in*

No. of Poles	A	B
1	—	—
2	1-1/8	5/8
3	1-3/4	1-1/4
4	2-3/8	1-7/8
5	3	2-1/2
6	3-5/8	3-1/8
7	4-1/4	3-3/4
8	4-7/8	4-3/8
9	5-1/2	5
10	6-1/8	5-5/8
11	6-3/4	6-1/4
12	7-3/8	6-7/8

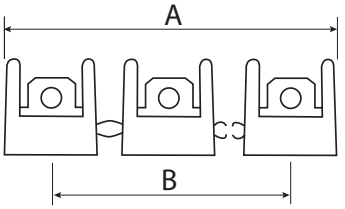

* Block length varies by specific termination and mounting. See data sheet 2101 for details.

Data sheet no. 2101

3828 open blocks with solder terminals for 1/4" x 1" fuses

3828

Ratings

- Volts 250 V
- Amps 30 A

Catalog no.	Poles	Base width — in (mm)
3828-1	1	1/2 (12.7)
3828-2	2	1-1/8 (28.6)
3828-3	3	1-3/4 (44.5)
3828-4	4	2-3/8 (60.3)
3828-5	5	3 (76.2)
3828-6	6	3 5/8 (92.1)
3828-7	7	4-1/4 (108.0)
3828-8	8	4-7/8 (123.8)
3828-10	10	6-1/8 (155.6)
3828-12	12	7-3/8 (187.3)

Dimensions — in**

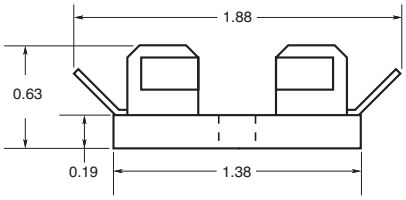

**Mounting screw hole diameter is 0.147." Max #6 mounting screw.

4520 and 4393 open blocks with solder terminals for 1/4" x 1" fuses

Ratings

- Volts 250 V
- Amps 30 A

Catalog no.	Description
4520	Integral clip and straight solder terminals
4393	Spare fuse block - no terminals

Dimensions — in*

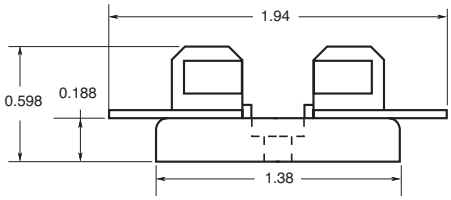

4520 integral clip and straight solder terminals

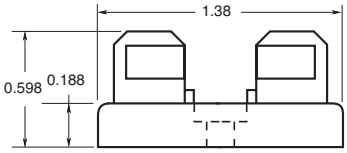

4393 spare fuse block, no terminals

* Mounting screw hole diameter is 0.147". Counterbore 0.636" diameter. Max #6 mounting screw.

BCM (Class CC) and BMM (supplemental 13/32 x 1-1/2" /10x38mm) modular style fuse blocks with optional covers.

RoHS 2011/65/EU

The BCM and BMM modular fuse blocks contain features that add versatility, reduce labor and enhance safety of any panel design. Optional IP20 finger-safe covers enhance safety with a lockout/tagout feature along with optional open fuse indication to speed troubleshooting.

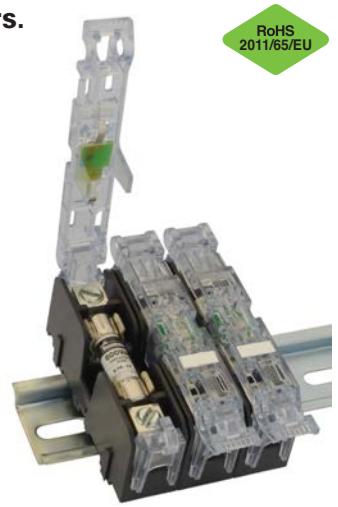

BMM603-3C with CVRI-CCM covers

Ratings

- Volts 600 Vac/dc
- Amps 30 A
- SCCR up to 200 kA*

* Limited by fuse interrupting rating

Agency information

- Class CC BCM blocks
  - UL Listed E14853 - IZLT
  - CSA Certified 47235-6225-01
  - RoHS Compliant
- 13/32" x 1-1/2" BMM blocks
  - UL Recognized, E14853 - IZLT2
  - CSA Certified 47235-6225-01
- CE
- RoHS compliant

BCM603-3PQ with pressure plate and 1/4" quick-connect terminals

Covers*

- Covers are included in the overall UL Listing/Recognition and CSA Certification

* Covers sold separately in multiples of three units. Order one unit per pole.

Poles

- 1-, 2-, 3-pole units factory assembled
- Single-pole units snap together to create desired number of poles

Flammability ratings

- Blocks UL 94V0, self-extinguishing
- Covers UL 94HB, self-extinguishing

Operating and storage temperature range

- Blocks -40°C to +120°C
- Non indicating covers -40°C to +120°C
- Indicating covers -20°C to +90°C**

**Indication requires minimum 90 V and closed circuit to illuminate.

Cover catalog numbers

- For blocks with quick-connect terminals — CVR(I)-CCM-QC
- All other terminal options — CVR(I)-CCM

Recommended Bussmann series fuses

- Class CC: LP-CC, FNQ-R, KTK-R
- UL 13/32" x 1-1/2": KTK, FNQ, KLM, FNM, BAF
- IEC 10x38mm: C10G, C10M, FWA, FWC

Recommended DIN-Rail end stops

- Catalog no. BRKT-ND
- Catalog no. BRKT-NDSCRW2

Features

- Available in 1-, 2- and 3-pole configurations to meet stocking requirements
- Blocks are fully modular with a snap-together design that provides toolless assembly of multiple pole blocks at point-of-use to reduce inventory and save assembly time and labor
- DIN-Rail and panel mount versatility allows one product to be used for multiple applications, lowering inventory cost
- Compact footprint consumes minimal panel space
- Optional see-through cover enhances safety with IP20 finger-safe protection, lockout/tagout capability and open circuit indication
- Easy circuit identification with available universal marker labels for fuse block covers
- Tin-plated bimetallic copper fuse clips deliver superior fatigue resistance compared to traditional spring brass
- Terminal options to meet application needs including 1/4" spade quick-connect terminals for faster panel assembly

Terminals for 75/90°C Cu and AL wire

Terminal type	AWG range	AWG	Torque lb-in (N•m)
Box lug (C)	Cu 2-14 Al 2-8	Cu 2-3	50 (5.6)
		Cu 4-6	45 (5.1)
		Cu 8-14	35 (4.0)
		Al 2-6	50 (5.6)
		Al 8	40 (4.5)
Screw (S)	Cu 10-18	10-18	20 (2.3)
Screw/quick-connect* (SQ)			
Pressure plate (P)			
Pressure plate/quick-connect* (PQ)			

* ¼" quick-connect terminal maximum amps dependent on female spade connector and wire ratings.

Recommended covers†

Terminal type	Cover catalog no. Indicating	Cover catalog no. Non indicating
Box lug (C)	CVRI-CCM	CVR-CCM
Screw (S)	CVRI-CCM	CVR-CCM
Screw/quick-connect (SQ)	CVRI-CCM-QC	CVR-CCM-QC
Pressure plate (P)	CVRI-CCM	CVR-CCM
Pressure plate/quick-connect (PQ)	CVRI-CCM-QC	CVR-CCM-QC

† For use with 4 AWG max conductors.

Data sheet no. 10241

Catalog no.						
Terminal type						
10-32 Phil-slot screw	Screw with quick-connect*	Pressure plate	Pressure plate with quick-connect*	Box lug	Poles	Fuse/class
BCM603-1S	BCM603-1SQ	BCM603-1P	BCM603-1PQ	BCM603-1C	1	CC
BCM603-2S	BCM603-2SQ	BCM603-2P	BCM603-2PQ	BCM603-2C	2	CC
BCM603-3S	BCM603-3SQ	BCM603-3P	BCM603-3PQ	BCM603-3C	3	CC
—	BMM603-1SQ	—	BMM603-1PQ	BMM603-1C	1	10x38 (13/32"x1-1/2")
—	BMM603-2SQ	—	BMM603-2PQ	BMM603-2C	2	10x38 (13/32"x1-1/2")
—	BMM603-3SQ	—	BMM603-3PQ	BMM603-3C	3	10x38 (13/32"x1-1/2")
—	BCCMM603-3SQ	—	BCCMM603-3PQ	—	3	3-Pole control circuit transformer block 2-pole CC with 1-pole 10x38mm (13/32" x 1-1/2")

* 1/4" quick-connect terminal maximum amps dependent on female spade connector and wire ratings.

Dimensions — mm (in)

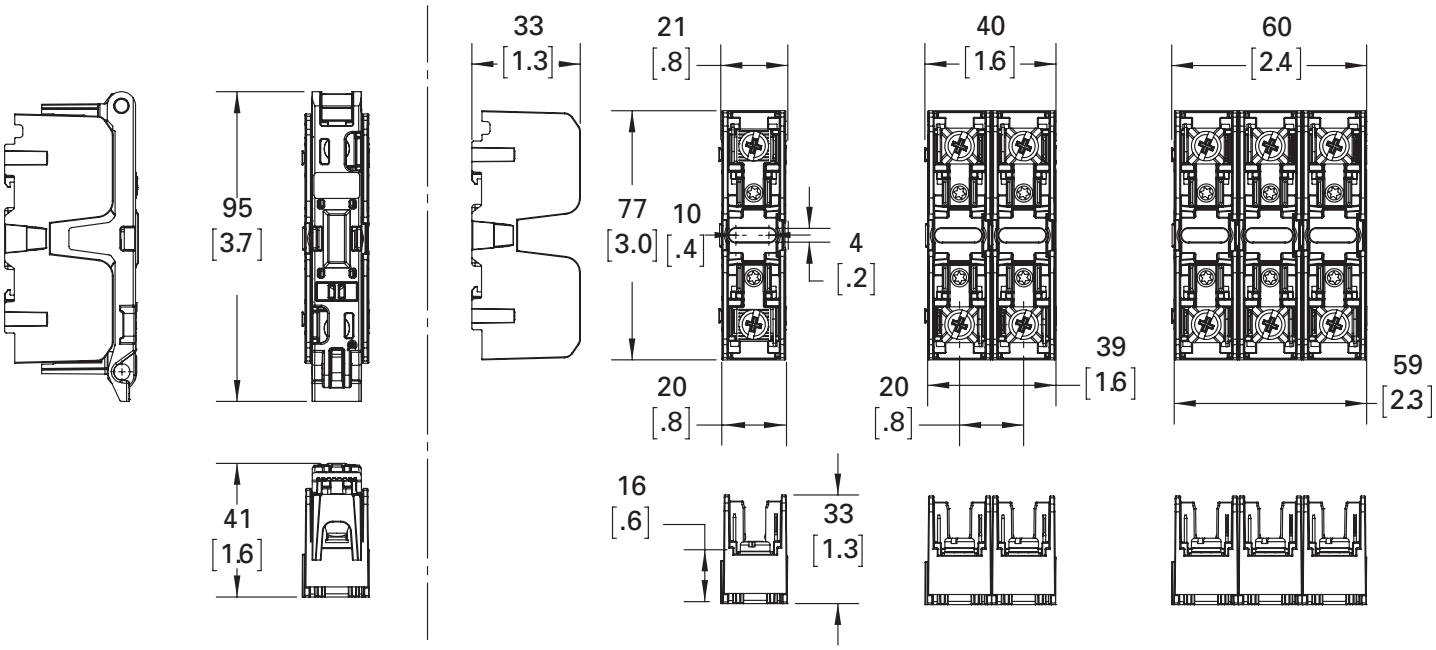

CH modular, IP20 finger-safe DIN-Rail holders for Class CC, midget and PV fuses

RoHS 2011/65/EU

Bussmann series CH DIN-Rail fuse holders are for UL Class CC and midget fuses, and IEC 10x38mm fuses. They are available with and without indication in 1-, 2- and 3-pole IP20 finger-safe versions. A variety of accessories extends their application flexibility and they may be ganged together to meet specific application requirements.

Ratings

- Volts
  - 600 V (or less) UL
  - 690 V (or less) IEC
  - 1000 Vdc (or less) photovoltaic (PV)
- Amps
  - 30 A UL
  - 32 A IEC
- SCCR
  - 33 kA photovoltaic
  - 200 kA RMS Sym. (CHCC, CHM*)

* CHM SCCR is fuse interrupting rating dependent.

Agency information

- CHCC, CHM; UL Listed Guide IZLT, Recognized Guide IZLT2, File E14853
- CHPV, UL Listed to 4248-19, Guide IZMR, File E348242
- CSA File 47235, CHPV and CHM - Class 6225-30, CHCC - Class 6225-01
- IEC 60269-2 (CHM, CHPV)
- CCC
- RoHS compliant
- CE

Mounting: 35mm DIN-Rail

Wire range

- 75°C and 90°C Cu
- 18-4 AWG (0.8-21.1mm^2)
- Solid, stranded and fine stranded*

* See data sheet 10430 for application details.

Terminals

- Single or dual conductors
- Comb busbar
- Terminal screws
  - Standard phil-slot
  - Optional hex head (order by adding "-H" suffix to the catalog number, e.g., CHM1DU-H)

Torque

- 30 lb-in (3.4 N•m) maximum

Data sheet no. 10430

Flammability

- UL 94V0, self-extinguishing

Storage and operating temperature

- -4°F (-20°C) to +194°F (90°C) indicating
- -4°F (-20°C) to +248°F (120°C) non-indicating

Features

- High SCCR rated, UL Listed Class CC holder with optional open fuse indication for 600 V and 48 Vdc (see catalog number table for details)
- Enhanced safety with IP20 finger-safe construction
- UL Recognized midget and IEC 10x38mm holders with factory assembled neutral pole option
- Agency ratings up to 1000 Vdc for use with PV fuses.
- Available remote PLC fuse indication module
- Wiring flexibility with terminals rated for use with 75°C or 90°C solid, stranded and fine stranded wire, and fork terminals and comb busbars. (Use any higher temperature insulations at the 90°C ampacity with appropriate derating.)
- Complete range of UL Listed and high SCCR rated one- and three-phase finger-safe comb busbars and power feed lugs
- Optional hex head terminal screw makes it easier to achieve necessary torque values

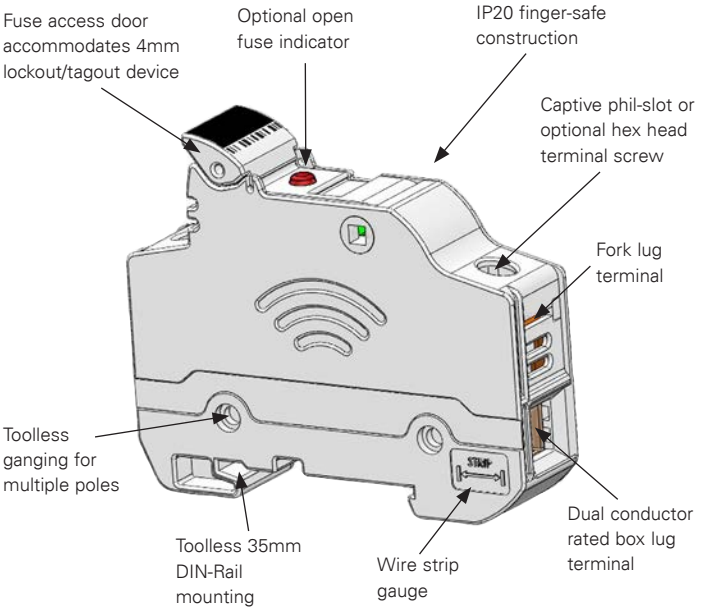

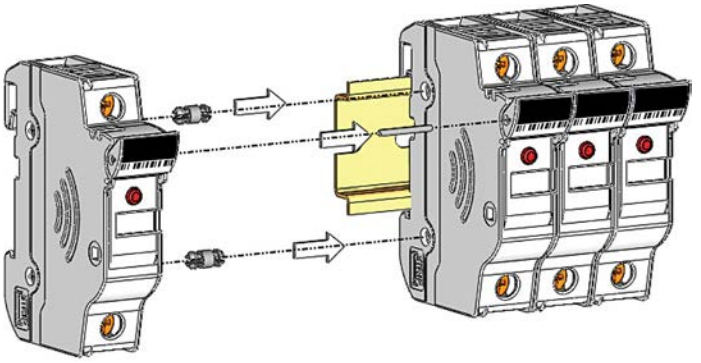

Gang multiple poles to meet application requirements using kit catalog number JV-L (gangs up to four poles).

UL midget and IEC 10x38

Catalog no.†		Volts and amps					
With indication*	Without indication	UL	IEC	Agency marks	Poles	SCCR	Recommended Bussmann series fuses
CHM1DIU	CHM1DU	600 V/ 30 A	690 V/ 32 A	UR, CSA, IEC 60269-2, CCC	1	200 kA RMS Sym.††	BAF, BAN, FNM, FNQ, FWA, FWC, KLM, KTK, AGU, C10G_, C10M_
CHM2DIU	CHM2DU				2		
CHM3DIU	CHM3DU				3		
CHM4DIU	CHM4DU				4		
CHM1DNIU	CHM1DNU			IEC 60269-2	1 + neutral		
CHM3DNIU	CHM3DNU				3 + neutral		
CHM1DI-48U	—	48 Vdc/ 30 A	48 Vdc/ 32 A	UR, CSA, IEC 60269-2, CCC	1		
—	CHM1DNXU	—	690 V/ 32 A	IEC 60269-2		N/A	N/A
CHM1DCIU	CHM1DCU	600 Vac, 1000 Vdc, 30 A	690 V, 32 A	UR, CSA, IEC 60269-2	1	200 kA RMS Sym.†† 33 kA DC	600/690 V BAF, BAN, FNM, FNQ, FWA, FWC, KLM, KTK, AGU, C10G_, C10M_, 1000 Vdc PV-(amp)A10F, PV10M-(amp)
CHM2DCIU	CHM2DCU				2		
CHM3DCIU	CHM3DCU				3		
CHM4DCIU	CHM4DCU				4		

UL Class CC

Catalog no. †						
With indication*	Without indication	Volts / amps	Agency marks	Poles	SCCR	Recommended Bussmann series fuses
CHCC1DIU	CHCC1DU	600 V/30 A	UL, CSA, CCC	1	200 kA RMS Sym.	LP-CC, FNQ-R, KTK-R
CHCC2DIU	CHCC2DU			2		
CHCC3DIU	CHCC3DU			3		
CHCC1DI-48U	—	48 Vdc/30 A		1	33 kA DC	

UL and IEC photovoltaic

Catalog no. †						
With indication*	Without indication	Volts / amps	Agency marks	Poles	SCCR	Recommended Bussmann series fuses
CHPV1IU	CHPV1U	1000 Vdc/30 A	UL, CSA, , UL 4248-18, IEC 60269-1, CCC	1	33 kA DC	PV-(amp)A10F, PV10M-(amp)
CHPV2IU	CHPV2U			2		

† Available with optional hex head terminal screws. To order, add "-H" suffix to the desired catalog number.
††SCCR is limited to the interrupting rating of the installed fuse or 200 kA, which ever is less.
* All models require 90 V minimum for illumination, except CHM1DI-48U that requires 15 V minimum.

Dimensions — mm (in)

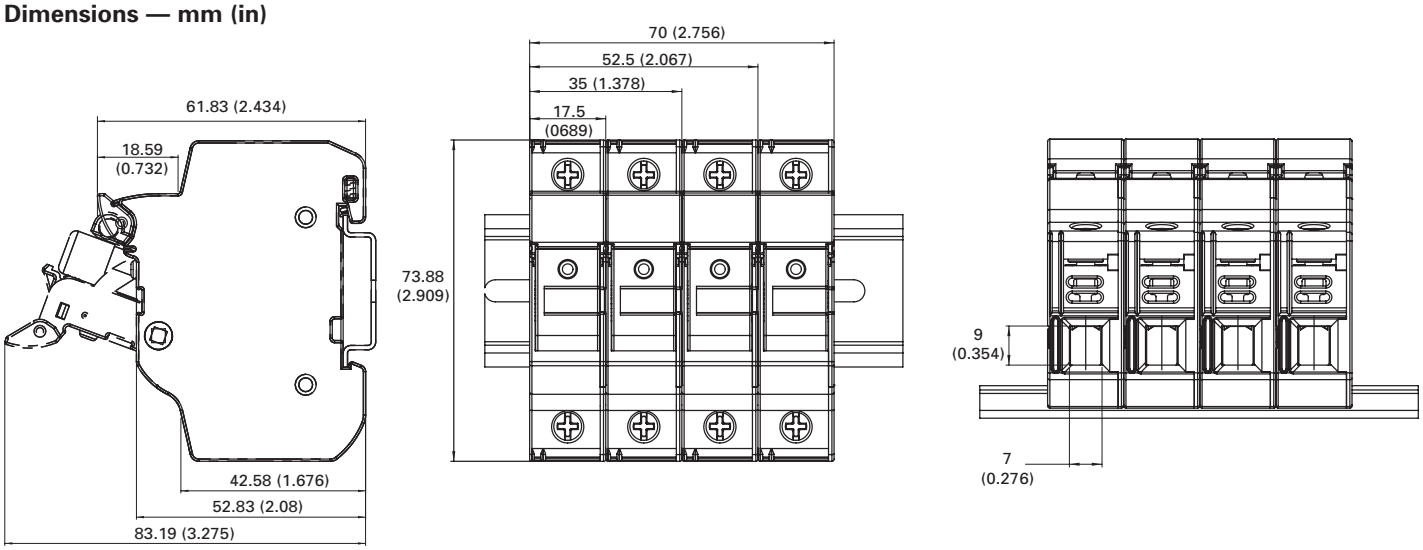

Data sheet no. 10430

Accessories

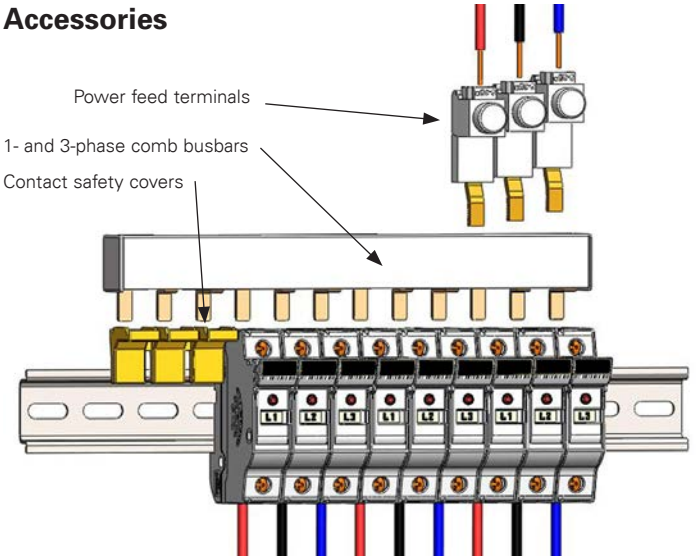

Comb busbars

- Easily distribute power in single-or three-phase systems
- Flexible cut-to-length busbars do not compromise the finger-safe protection (requires using endcaps)
- 100 kA SCCR when protected by a max 200 A Class J fuse
- Single-phase busbars rated to 1000 Vdc and 100 A
- Three-phase busbars rated to 600 V and 100 A
- Power feed terminals for single-and three-phase systems

Agency information

- UL 508, File E195399

Pitch 17.8mm

Ratings

- Volts
  - 600 V max. (three-phase)
  - 1000 Vdc/600 Vac max. (single-phase)
- Amps 100 A max.
- SCCR
  - 10 kA (default)
  - 100 kA (with upstream Class J max 200 A fuses)

Catalog no.	Phase	No. of pins	Endcaps*
BB1P100M3	Single	3	Yes*
BB1P100M6		6	
BB1P100M9		9	
BB1P100M12		12	
BB1P100M15		15	
BB1P100M57		57 pin cuttable	No**
BB3P100M6	Three	6	Yes*
BB3P100M9		9	
BB3P100M12		12	
BB3P100M15		15	
BB3P100M57		57 pin cuttable	No**

* With endcaps assembled. If cut to length, order additional endcaps separately.
**Order end caps separately, ECAP1P for single-phase busbars and ECAPMP for three-phase busbars.

Data sheet no. 10430

Power feed terminals

PWR1PLP — Single-phase, low profile power feed terminal

Ratings

- Volts 1000 V
- Amps 115 A
- Wire range 1/0-10 AWG Cu, max torque 50 lb-in (5.6 N•m)
- Wire rating 60°C†

PWR35MM — 35mm² three-phase power feed terminal for three-phase busbars

Ratings

- Volts 1000 V
- Amps 115 A
- Wire range 1/0-10 AWG Cu, max torque 50 lb-in (5.6 N•m)
- Wire rating 60°C†

PWR50MM — 50mm² direct feed power terminal

Ratings

- Volts 1000 V
- Amps 115 A
- Wire range 1-14 AWG Cu, max torque 35 lb-in (3.9 N•m)
- Wire rating 75°C†

† Higher temperature rated wire may be used with appropriate derating.

Comb busbar safety covers and end caps

FSCVR

Spare comb busbar pin safety protection covers (used to cover exposed pins on comb busbars). Sold in quantity of ten strips of five covers each. (FSCVR comes with five covers on a strip. Minimum order is 10 strips or 50 safety covers total.)

ECAP1P

End cap for single-phase comb busbars. Sold in quantity of fifty.

ECAPMP

End cap for three-phase comb busbars. Sold in quantity of fifty.

Accessory catalog numbers

Catalog no.	Description	Carton quantity
PWR1PLP	Single-phase low-profile power feed terminal (115 A, 1000 V)	10
PWR35MM	35mm² power feed terminal for three-phase busbar (115 A, 1000 V)	10
PWR50MM	50mm² direct power feed terminal (1000 V)	10
ECAP1P	Single-phase busbar endcap	50
ECAPMP	Three-phase comb busbar end cap	50
FSCVR	Spare comb busbar pin safety protection covers	10 strips of five covers each, total 50 individual covers

PLC fuse monitor

Catalog no. CH-PLC2

The Bussmann series resettable PLC fuse monitor permits easy integration with a Programmable Logic Controller (PLC) or other monitoring and control equipment. Signals up to three-phases. Includes 0.11" (2.8mm) quick-connects for power, signal and ground connections.

Ratings

- Signal output to PLC*
  - +24 Vdc, 10 mA max
- Output signals
  - Digital 0 Vdc (low), 24 Vdc max (high)
  - 0 Vdc Low – fuse is good
  - 24 Vdc High – fuse has opened

* When the fuse opens, the output signal is sent high and will remain high until the unit is reset.

Agency information

- UL 508 Listed, Guide NKCR, File E170168
- cULus, Guide NKCR7, File E170168 to Canadian Standard 22.2, No. 14-13

Emissions and immunity testing

- IEC 60947-1: Voltage Switchgear and Control Gear
- IEC 61000-6-2: Electromagnetic Compatibility (EMC)
  - IEC 61000-4-2: Electrostatic Discharge Immunity - Test at level 3 (6 kV-Contact Discharge) and level 2 (4 kV-Air Discharge)
  - IEC 61000-4-3: Electromagnetic Compatibility - Radiated, Radio-frequency, Electromagnetic Field Immunity test at level x (20 V/m)
  - IEC 61000-4-4: Electromagnetic Compatibility - Testing and Measurement Techniques at level 3 (± 2kV - Power Port and ±1 kV - I/O Ports)
  - IEC 61000-4-5: Electromagnetic Compatibility - Surge Immunity test at level 4 (±4 kV)
  - IEC 61000-4-6: Immunity to Conducted Disturbances at level 3 (10 V)

Flammability rating UL 94V0

Local indication

- Two distinct LEDs indicate unit power (green) and open fuse (red). Open fuse LED is resettable upon fuse replacement and the actuating the reset switch

Wiring

- For power, signal and ground connections use shielded twisted pair 22-24 AWG (0.34-0.25mm^2) 300 V rated wire.

Minimum circuit voltage

- Minimum circuit voltage required across the CH holder is 100 Vac for the remote indication device to operate

Installation

- Mounts on the left side of the fuse holder and mechanically interlocks with the fuse holder switch handle with hardware provided

Degree of protection IP20 finger-safe

Storage and operating temperature

- -4°F (-20°C) to +167°F (+75°C)

PLC programming

- The CH-PLC2 signal line is designed to provide a digital input to a PLC I/O card
- Programmable Logic Control program must be written to properly interpret the input signal to the PLC
- The PLC program should check for consecutive high signals before taking action on a critical process

To order

- Specify catalog number CH-PLC2 (one unit)

Data sheet no. 10430

NDNF1-WH single-pole DIN-Rail mount fuse holding terminal block for 13/32" x 1-1/2" (10x38mm) fuses

Ratings: 600 volts / 30 amps

Wire range 8-22 AWG Cu

Torque rating 2.03 N•m (18 lb-in)

Mounting 35mm DIN-Rail or C-rail

Fuse pullers

- PF1-WH (white)
- PF1-BK (black)

Max operating temperature 105°C

Circuit jumper catalog no. JF1 for 2 circuits

Optima™ fuse holder module and module with disconnect switch

OPM-1038(R)(C) without switch

OPM-1038(R)SW(C) with switch

OPM-1038(R)(C) is a 3-pole modular fuse holder 13/32" x 1-1/2" (10x38mm) and Class CC fuses.

OPM-1038(R)SW(C)* is a 3-pole load break modular fuse holder and disconnect switch for 13/32" x 1-1/2" (10x38mm) and Class CC fuses.

Both the OPM-1038(R)SW(C) and OPM-1038(R)(C) are available with optional communications for interfacing with programmable logic controllers.

* Recommend using the UL 98 Listed CCP2 disconnect switch. See page 11-2.

Ratings

- See catalog numbers table

Agency information

- See catalog numbers table

Flammability rating UL 94V0

OPM-1038(R)SW(C) switch horsepower ratings

3-phase volts	240	480	600
HP	5	10	15

Recommended Bussmann series fuses

- Class CC; LP-CC, FNQ-R, KTK-R
- UL 13/32" x 1-1/2"; KTK, FNQ, KLM, FNM, BAF
- IEC 10x38mm; C10G, C10M, FWA, FWC

Physical characteristics

- Small size matches 45mm IEC starter width
- Accepts Cu AWG stranded 8-18 and solid 10-18 wire
- OPM-1038(R)SW(C) switch version requires a handle and shaft for through the door operation

Features

- Padlockable with finger-safe terminals for safety. Qualified as IP20 per IEC 60529
- Cam-action handle for easy fuse module removal, offered with Class CC rejection clips or 13/32 x 1-1/2 (10x38mm) clips to meet global needs
- Wire ready with 35mm DIN-Rail or screw panel mounting (#8 screw, 1-1/4" long) saves installation time
- Fuse indication lights with optional communications for remote fuse status available. See data sheet for additional wiring details.

Typical applications

- Industrial control
- Process control systems
- Automated warehouse systems
- Individual control circuits

Dimensions — in (mm)

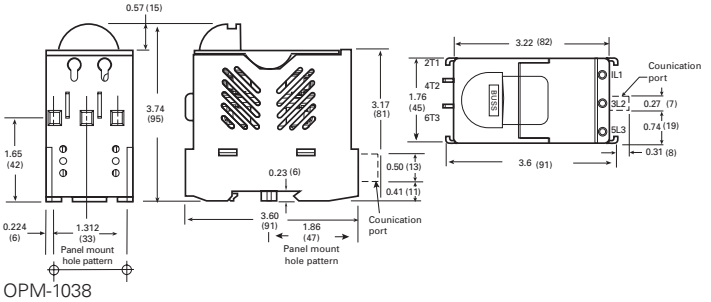

OPM-1038

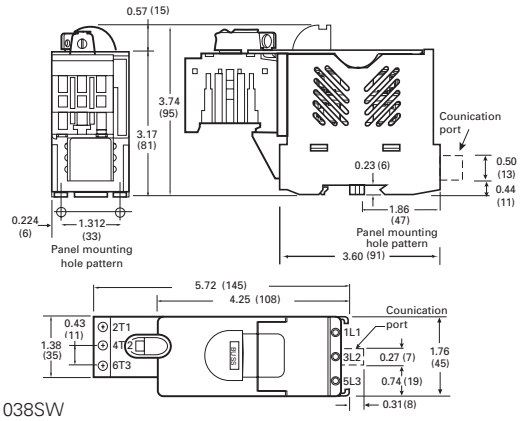

OPM-1038SW

Catalog no.						
Without communication	**With communication**	**Fuse type/size**	**Volts**	**Amps**	**SCCR**	**Agency information**
OPM with disconnect switch						
OPM-1038SW	OPM-1038SWC*	Non-rejection, 13/32" x 1-1/2 or 10x38mm	600 Vac UL/CSA, 660 V IEC	30 A UL, 32 A IEC	**	UL 508 Recognized, Guide NLRV2, File E161278, CSA Certified, C22.2 No. 39, Class 6225-01, File 47235, IEC 60947-3, CE
OPM-1038RSW	OPM-1038RSWC*	Class CC	600 Vac UL/CSA	30 A	100 kA	UL 508 Listed, Guide NLRV, File E161278, CSA Certified, C22.2 No. 39, Class 6225-01, File 47235,IEC 60947-3, CE
OPM without switch						
OPM-1038	OPM-1038C*	Non-rejection, 13/32" x 1-1/2 or 10x38mm	600 Vac UL/CSA, 660 V IEC	30 A UL, 32 A IEC	**	UL Recognized, Guide IZLT2, File E114853, CSA Certified, C22.2 No. 39, Class 6225-01, File 47235, IEC 60269-2-1, CE
OPM-1038R	OPM-1038RC*	Class CC	600 Vac UL/CSA	30 A	200 kA	UL Listed, Guide IZLT2, File E114853, CSA Certified, C22.2 No. 39, Class 6225-01, File 47235, IEC 60269-2-1, CE

* With communication not CE.
**Rating varies depending on fuse used in module; 10 kA default, higher SCCR requires testing and certification.

Data sheets no. 1002 (OPM-1038) and 1103 (OPM-1038SW)

OPM-NG Optima three-pole overcurrent protection module

The OPM-NG is a 3-pole protection module that's available in versions for Class CC, and UL 13/32" x 1-1/2" supplemental and 10x38mm IEC fuses.

Catalog numbers

- OPM-NG-SC3 (Class CC)
- OPM-NG-SM3 (UL/IEC)

Ratings

- Volts
  - 600 Vac (or less) UL and CSA
  - 690 Vac (or less) IEC
- Amps
  - 30 A UL and CSA
  - 32 A IEC
- SCCR
  - 200 kA Class CC
  - UL supplemental and IEC same as fuse IR up to 200 kA max

Agency information

- UL; OPM-NG-SC3 UL Listed, UL 4248, File E14853, Guide IZLT. OPM-NG-SM3, UL Recognized, UL 4248, File E14853, Guide IZLT2. CSA Certified, C22.2 No. 4248, Class 6225-01, File 47235. IEC 60947-3 Utilization Category AC20B, CE

Recommended Bussmann series fuses

- Class CC: LP-CC, FNQ-R, KTK-R
- UL 13/32" x 1-1/2": KTK, FNQ, KLM, FNM, BAF
- IEC 10x38mm: C10G, C10M, FWA, FWC

Features

- 45mm width matches IEC starters
- 35mm DIN-Rail or panel mount. Max. screw size #8 (M4).
- Pressure plate terminations with dual-wire rated terminals (see wire table) and optional auxiliary contacts
- Integrated collapsible handle and fuse carrier cannot be removed from holder base
- Padlockable and IP20 finger-safe to IEC 60529

Typical applications

- Mass produced control systems
- Process control systems
- Automated warehouse systems
- Individual control circuits

Fuse holder AWG wire range (75°C Cu only)*

- 18-12, single/dual, torque 15 lb-in (1.7 N•m)
- 10-8, single/dual, torque 20 lb-in (2.2 N•m)

* Dual wire with same gauge and type

Input power terminal wire range (AWG)

		Torque lb-in (N•m)	
Wire	**AWG (mm²) range**	**Connector**	**Screw clamp**
Solid	Single 14-2 (1.5-25)	20 (2.2)	15 (1.7)
	Dual 14-6 (1.5-10)		
Stranded	Single 14-2 (1.5-25)		
	Dual 12-6 (2.5-10)		

Flammability rating

- UL V2

Dimensions — mm (in)

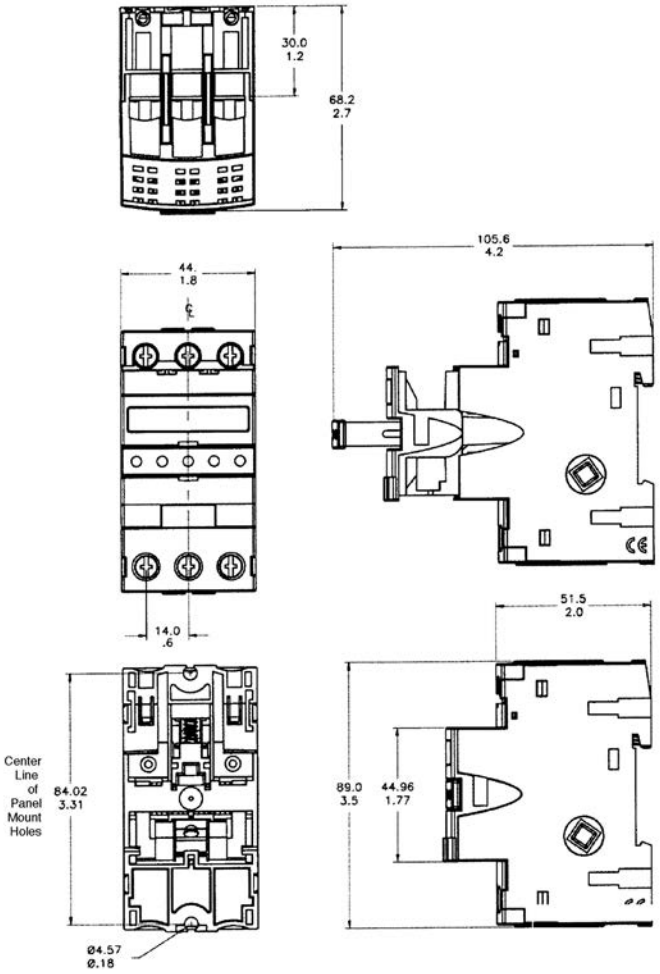

Data sheet no. 1109

3743 open, add-on block for 13/32" x 1-1/2" (10x38mm) fuses

Single pole blocks lock into each other and can be added at any time. Each has a single end barrier.

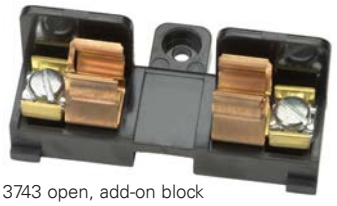

3743 open, add-on block

Ratings

RoHS 2011/65/EU

Volts 600 V

Amps 30 A

Agency information

- UL Recognized, Guide IZLT2, File E14853, CE

3742 end barrier only

Catalog no.	Description
3743	Add-on fuse block
3742	End barrier
3723	Block and end barrier marking strip (length 9-3/8")

Dimensions — in*

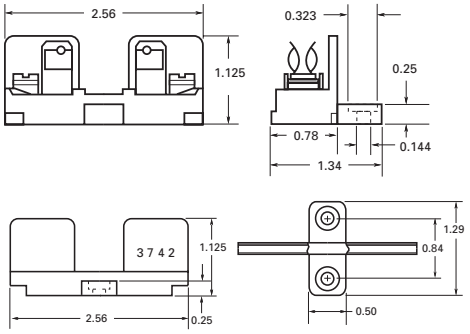

* Mounting screw hole diameter 0.147" (3.7mm). Counterbore diameter 0.636" (8mm). Max. #6 mounting screw.

4421 and 4515 open single pole blocks for 13/32" x 1-1/2" (10x38mm) fuses.

Ratings

- Volts 250 V
- Amps 30 A

RoHS 2011/65/EU

Agency information

- CE

4421 solder terminal

4515 screw terminal

Catalog no.	Terminals	Base width
4421	Solder	5/8" (16mm)
4515	Screw	3/4" (19mm)

Dimensions — in*

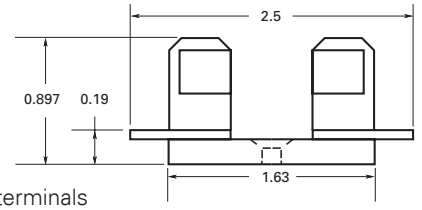

4421 solder terminals

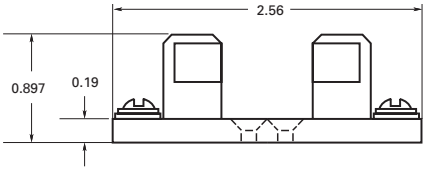

4515 with screw terminals

* Mounting screw hole diameter 0.147". Counterbore diameter 0.312". Max. #6 mounting screw.

Data sheet no. 2104

BG and G Class G fuse blocks

Bussmann series open style BG and G fuse blocks are available in 1-, 2- and 3-pole configurations and offer a variety of terminal options.

Ratings

- Volts
  - 600 V (0-20 A)
  - 480 V (25-60 A)
- Amps up to 60 A
- SCCR 100 kA RMS Sym.

Agency information

- UL Listed, 4248-5, Guide IZLT, File E14853
- 1-60 A CSA Certified, C22.2 No. 39, Class 6225-01, File 47235
- RoHS compliant

Mounting

- Panel
- DIN-Rail with DRA-1 adapter

	Catalog no./terminal				
Amps	**Screw w/ quick-connect***	**Pressure plate w/ quick-connect***	**Box lug**	**Box lug w/ retaining clip**	**Poles**
Up to 15	BG3011SQ	BG3011PQ	BG3011B	—	1
	BG3012SQ	BG3012PQ	BG3012B	—	2
	BG3013SQ	BG3013PQ	BG3013B	—	3
20	BG3021SQ	BG3021PQ	BG3021B	—	1
	BG3022SQ	BG3022PQ	BG3022B	—	2
	BG3023SQ	BG3023PQ	BG3023B	—	3
25-30	BG3031S	BG3031P	BG3031B	—	1
	BG3032S	BG3032P	BG3032B	—	2
	BG3033S	BG3033P	BG3033B	—	3
35-60	—	—	—	G30060-1CR	1
	—	—	—	G30060-2CR	2
	—	—	G30060-3C**	G30060-3CR	3
AWG wire range/ type	10-14 Cu	10-18 Cu	6-14 Cu (1-30 A) 2-14 Cu (35-60 A) 2-8 Al (35-60 A)	2-14 Cu 2-8 Al	

* Quick-connect rated 20 A max.
**Not RoHS compliant.

Accessories

Catalog no.†	Description	Color
PF1-WH	Fuse cover/puller	White
PF1-BK		Black

† Order one cover per pole.

Dimensions — in

1-30 A

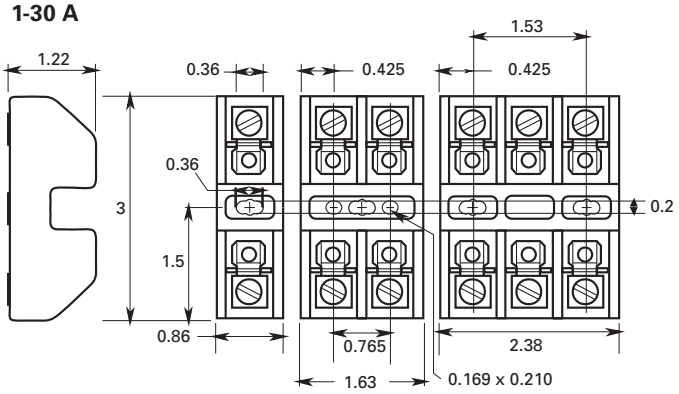

35-60 A

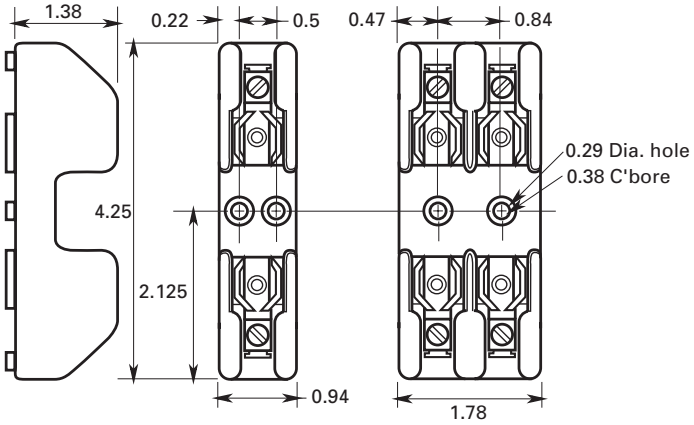

35-60 A 3-Pole G30060-3C and G30060-3CR

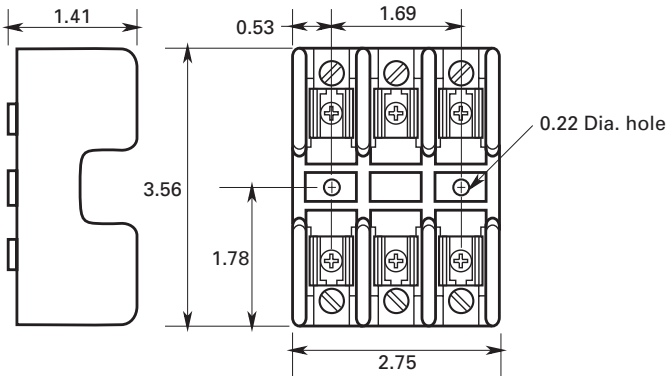

CH14 modular fuse holders for 14x51mm fuses

Bussmann series 14x51mm modular fuse holders are suitable for use with standard cylindrical fuses and high speed FW type ferrule fuses. With DIN-Rail or panel mount flexibility, their compact dimensions helps reduce space, allows for higher cable bending radius. Low watts loss and wide range of accessories make them ideally suited for most industrial applications.

Ratings

- Volts
  - 690 Vac/750 Vdc (IEC)
  - 700 Vac (UL)
- Amps
  - 50 A
- SCCR
  - 120 kA AC
  - 10 kA DC (PV only)
- Power acceptance
  - 5 W to IEC 60269-2 (rated)
  - 6.2 W (max)
- Rated impulse withstand voltage (U_{imp})
  - 6 kV
- Microswitch (IEC)
  - 250 Vac / 5 A

RoHS 2011/65/EU

Shown with optional microswitch

Agency information

- IEC 60269-1 and 2, UL Listed File E14853, CCC (UL/IEC)
- IEC 60269-1 and 2, UL Listed File E348242, CCC (PV)
- RoHS compliant

Poles

1 to 4

Protection index

- IP20

Temperature range

- Storage
  - -40°C to +80°C (CH14D)
  - -20°C to +90°C (CHPV14 indicating)
  - -20°C to +120°C (CHPV14 non-indicating)
- Operating
  - -20°C to +70°C (CH14D)
  - -20°C to +90°C (CHPV14 indicating)
  - -20°C to +120°C (CHPV14 non-indicating)

Features

- Ventilation zones optimized for better heat dissipation
- Built-in padlocking facility and IP20 degree of protection
- Photovoltaic version rated at 1500 Vdc (IEC only) for use with gPV fuses

Catalog no.	Poles	Description
UL/IEC holders		
CH141DNXU	1	Neutral holder
CH141DU	1	Fuse holder
CH142DU	2	
CH143DU	3	
CH144DU	4	
CH141DNU	2	1-pole holder+ neutral
CH143DNU	4	3-pole holder+ neutral
CH141DIU	1	Fuse holder with neon indicator
CH142DIU	2	
CH143DIU	3	
CH144DIU	4	
CH141DNIU	2	1-pole holder + neutral + neon indicator
CH143DNIU	4	3-pole holder + neutral + neon indicator
CH141DMSU-F	1	Holder + microswitch
CH143DMSU-F	3	
CH143DNMSU-F	4	3-pole holder+ neutral + microswitch
CHPV141DI-48U	1	Holder with LED indicator
1500 Vdc photovoltaic holders		
CHPV141U	1	Holder
CHPV141IU	1	Holder with neon indicator
CHPV142U	2	Holder
CHPV142IU	2	Holder with neon indicator

Accessories

Catalog no.	Description
JV-L	Multi-pole connector kit; one kit gangs up to 4 poles
CH14-SPS	Microswitch for CH141D(I)U; 1 NO + 1 NC changeover type
CH14-TPS	Microswitch for CH143D(I)U; 1 NO + 1 NC changeover type
CH14-CTP	IP20 protection accessory for terminals with 10mm² or less cable

Data sheet no. 10080

CH22 modular fuse holders for 22x58mm fuses

Bussmann series 22x58mm modular fuse holders are suitable for use with standard cylindrical fuses and high speed FW type ferrule fuses. Their compact dimensions help reduce space and allow for higher cable bending radius. Low watts loss and wide range of accessories make them ideally suited for most industrial applications.

Ratings

- Volts
  - 690 Vac/1000 Vdc (IEC)
  - 700 Vac (UL)
- Amps
  - 125 A (IEC)
  - 100 A (UL)
- SCCR
  - 120 kA AC
  - 50 kA DC
- Power acceptance
  - 9.5 W to IEC 60269-2
- Rated impulse withstand voltage (U_{imp})
  - 6 kV
- Microswitch (IEC)
  - 250 Vac / 5 A

Agency information

- IEC 60269-1 and 2, UL Listed File E14853, CCC, RoHS compliant

Poles

1 to 4

Protection index

- IP20 Finger-safe*

* Available protection accessory CH22-CTP for use with conductors of 10mm² or less

Wire size (Cu only)

- 2.5-70mm²

Temperature range

- Storage -40°C to +80°C
- Operating -20°C to +70°C

Features

- Compact dimensions
- Ventilation zones optimized for a better heat dissipation
- Built-in padlocking facility
- IP20 degree of protection
- Flexibility to mount on DIN Rail and screw mounting
- Toolless DIN-Rail mounting, improves ease of use and reduces installation time and costs

Catalog no.	Poles	Description
CH221DNXU	1	Neutral holder
CH221DU	1	Fuse holder
CH222DU	2	
CH223DU	3	
CH224DU	4	
CH221DIU	1	Holder with neon indicator
CH222DIU	2	
CH223DIU	3	
CH224DIU	4	
CH221DNU	2	1-pole holder + neutral
CH223DNU	4	3-pole holder + neutral
CH221DNIU	2	1-pole holder+ neutral + neon indicator
CH223DNIU	4	3-pole holder+ neutral + neon indicator
CH221DMSU-F	1	Holder with microswitch (pre-breaking/fuse operation)
CH223DMSU-F	3	3-pole holder + microswitch (pre-breaking/ fuse operation)
CH223DNMSU-F	3	3-pole holder + neutral + microswitch (pre-breaking/fuse operation)
CH221DI-48U	1	1-pole holder with LED Indicator

Accessories

Catalog no.	Description
JV-L	Multi-pole connector kit; one kit gangs up to 4 poles
CH22-SPS	Microswitch for CH221D(I)U; 1 NO + 1 NC changeover type
CH22-TPS	Microswitch for CH223D(I)U; 1 NO + 1 NC changeover type
CH22-CTP	IP20 protection accessory for terminals with 10mm² or less cable

JM70100 700 V modular fuse blocks and modular power distribution fuse blocks for 22x58mm IEC fuses

Fuses not included.

The patented JM70100 fuse block products are available for 22x58mm gG, aM and select high speed fuses as either a fuse block or power distribution fuse block. The power distribution fuse blocks eliminate the need for a separate power distribution block, and require up to 78 percent less panel space while reducing installation time and labor by an average of 36 percent.

All blocks are equipped with a fuse clip reinforcing spring to minimize temperature rise while maintaining reliable surface contact between the fuse and clip over the block's service life.

Rated for applications up to 700 V and 100 amps, their modular design allows for assembly of multiple pole configurations at the point of use. These blocks can also be ordered as factory configured 2- and 3-pole versions.

The versatile 35mm DIN-rail or panel mount capability allows using the same block for multiple applications and reducing inventory cost.

Optional IP20 finger-safe covers enhance electrical safety with a lockout/tagout feature and can be ordered with or without open fuse indication to speed troubleshooting.

The high 200 kA SCCR rating helps achieve a higher assembly short-circuit current rating (SCCR) for compliance with NEC® sections 110.10, 409.110(4), 409.22, 440.4(B), 670.3(A)(4) and 670.5.

Easy circuit identification with available universal labels for blocks and covers.

Fuse class

- IEC 22x58mm gG, gL, aM and aR and gR high speed fuses

Ratings

- Volts 700 V
- Amps 100 A
- SCCR 200 kA RMS Sym.

Agency information

- Blocks; UL Recognized, Guide IZLT2, File E14853, CSA Component acceptance 47235 — 6225-01
- Covers UL Listed, Guide JDVS, File E58836
- RoHS compliant

Poles

- 1-, 2-, 3-pole
- Single-pole units snap together to create desired number of poles

Flammability ratings

- Blocks: UL 94V0, self-extinguishing
- Covers: UL 94HB, self-extinguishing

Operating and storage temperature range

- Blocks -40°C to +120°C
- Covers; Non-indicating -40°C to +120°C, Indicating -20°C to +90°C

Conductors

- 75°C Cu/Al*

* Conductors with higher temperature rating may be used, but at their 75°C ampacity.

Accessories

- Optional IP20 finger-safe covers in indicating and non-indicating versions. Order one for each pole

Catalog no.	Optional covers*	Fuse amp range	Poles	Lineside conductors and torque			Loadside conductors and torque		
				Conductors	Size (AWG)	N•m (lb-in)	Conductors	Size (AWG)	N•m (lb-in)
Fuse blocks									
JM70100-1CR	CVR-J-60060 CVRI-J-60060**	Up to 100	1	Cu 2-14 Al 2-8	2-3	5.6 (50)	Cu 2-14 Al 2-8	2-3	5.6 (50)
JM70100-2CR			2		4-6	5.1 (45)		4-6	5.1 (45)
JM70100-3CR			3		8	4.5 (40)		8	4.5 (40)
					10-14	4.0 (35)		10-14	4.0 (35)
Power distribution fuse blocks									
JM70100-1MW14	CVR-J-60060 CVRI-J-60060**	Up to 100	1	Cu 2-14 Al 2-8	2-3	5.6 (50)	Cu (1) 8-18 Cu (2) 12-18 Al (1) 8 Str Al (1) 10 Sol	Cu (1) 8	3.4 (30)
JM70100-2MW14			2		4-6	5.1 (45)		Cu (1) 10-18	2.8 (25)
JM70100-3MW14			3		8	4.5 (40)		Cu (2) 12-18	3.4 (30)
					10-14	4.0 (35)		Al (1) 8-10	3.4 (30)

* Covers sold separately, one cover per pole.
**Open fuse indication requires 90 volts minimum and closed circuit to operate.

Data sheet no. 10496

HM modular 250 V and 600 V Class H(K) fuse blocks

Class H(K) modular fuse blocks enhance safety for any panel or electrical system design and are available for the full Class H(K) fuse amp range.

All blocks are available as snap-together single-pole versions for toolless assembly of multiple poles at point of use, or as factory configured 2-, and 3-pole versions to meet stocking requirements.

All blocks are equipped with a fuse clip reinforcing spring to minimize temperature rise while maintaining reliable surface contact between the fuse and clip over the block's service life.

30 and 60 amp ferrule fuse blocks save panel space with the smallest width dimension on the market and feature DIN-Rail and panel mount versatility.

100 to 600 amp knifeblade fuse blocks feature phase barriers between poles for additional safety with up to four mounting holes per pole to increase installation flexibility. All knifeblade blocks meet UL creep and clearance requirements for Industrial Power Circuits (UL 508 and UL 845), with the 200 to 600 amp blocks meeting the higher UL creep and clearance requirements for Power Distribution Standards (UL 98, UL 67, UL 489, UL 891 and UL 869A)

All blocks are available with optional IP20 finger-safe high clarity, see-through covers for inspecting wire terminations or thermography measurements without removal. All covers enhance safety by featuring probe holes for easier, safer testing and a lockout/tagout capability. These covers also have optional open fuse indication to speed troubleshooting.

Easy circuit identification is available for 30 and 60 amp blocks and covers with universal marker labels.

Ratings

- Volts
  - 250 V
  - 600 V
- Amps up to 600
- SCCR 10 kA RMS Sym.

Agency information

- Blocks;UL Listed, Guide IZLT and IZLT7, File E14853, CSA Certified 47235-6225-01, CE
- RoHS Compliant
- Covers; UL Listed, Guide JDVS, File E58836, CSA Certified 47235-6225-01 (30 and 60 A)
- RoHS Compliant

Poles

- 1-, 2-, 3-pole units factory assembled
- Single-pole units snap together to create desired number of poles

Flammability ratings

- Blocks: UL 94V0, self-extinguishing
- Covers: UL 94HB, self-extinguishing

Operating and storage temperature range

- Blocks -40°C to +120°C
- Covers; Non-Indicating -40°C to +120°C, Indicating -20°C to +90°C*

* Indication requires minimum 90 V and closed circuit to illuminate.

Conductors

- See catalog numbers for details and torque specifications

Class K 30 and 60 amp blocks and covers

Fuse amp range	Poles	Catalog no./terminal type					Optional covers*	
		Box lug/slot screw	Box lug/hex screw	10-32 Phil-slot screw	Screw with quick-connect	Pressure plate	Indicating**	Non-indicating
250 volt blocks								
up to 30	1	HM25030-1CR	HM25030-1CHR	HM25030-1SR	HM25030-1QR	HM25030-1PR	CVRI-RH-25030	CVR-RH-25030
	2	HM25030-2CR	HM25030-2CHR	HM25030-2SR	HM25030-2QR	HM25030-2PR		
	3	HM25030-3CR	HM25030-3CHR	HM25030-3SR	HM25030-3QR	HM25030-3PR		
35 to 60	1	HM25060-1CR	HM25060-1CHR	—	—	—	CVRI-RH-25060	CVR-RH-25060
	2	HM25060-2CR	HM25060-2CHR					
	3	HM25060-3CR	HM25060-3CHR					
600 volt blocks								
up to 30	1	HM60030-1CR	HM60030-1CHR	HM60030-1SR	—	HM60030-1PR	CVRI-RH-60030	CVR-RH-60030
	2	HM60030-2CR	HM60030-2CHR	HM60030-2SR		HM60030-2PR		
	3	HM60030-3CR	HM60030-3CHR	HM60030-3SR		HM60030-3PR		
35 to 60	1	HM60060-1CR	HM60060-1CHR	—		—	CVRI-RH-60060	CVR-RH-60060
	2	HM60060-2CR	HM60060-2CHR					
	3	HM60060-3CR	HM60060-3CHR					

* Covers sold separately, one cover per pole.
**Open fuse indication requires 90 volts minimum and closed circuit to operate.

Class H 100 to 600 amp knifeblade blocks and covers

Fuse amp range	Poles	Catalog no.	Optional covers* Non-indicating	Optional covers* Indicating**	Conductors*** Solid and stranded	Conductors*** Fine stranded	Torque N•m (lb-in)
250 volt blocks							
70-100	1	HM25100-1CR	CVR-RH-25100	CVRI-RH-25100	—	Cu 1-3 AWG	6.2 (55)
					1/0-3 AWG; (2) Cu 4-6 AWG	Cu 4-6 AWG	5.6 (50)
	2	HM25100-2CR			2 4-6 AWG; (2) Cu 8 AWG	Cu 8 AWG	5.1 (45)
					8 AWG; (2) Cu 10-14 AWG	—	4.5 (40)
	3	HM25100-3CR			Cu 10-14 AWG; Al 10-12 AWG	—	4.0 (35)
110-200	1	HM25200-1CR	CVR-RH-25200	CVRI-RH-25200	250kcmil-1 AWG	Cu 3/0-1 AWG	42 (375)
	2	HM25200-2CR			2-6 AWG; (2) Cu 2-6 AWG	Cu 2-6 AWG	31 (275)
	3	HM25200-3CR					
225-400	1	HM25400-1CR	CVR-RH-25400	CVRI-RH-25400	600kcmil	N/A	57 (500)
	2	HM25400-2CR			500kcmil-4 AWG		51 (450)
	3	HM25400-3CR			(2) Cu 3/0 - 4 AWG		57 (500)
					(2) Al 3/0 - 4 AWG		34 (300)
450-600	1	HM25600-1CR	CVR-RH-25600	CVRI-RH-25600	2 (2) 500kcmil-4 AWG	N/A	51 (450)
	2	HM25600-2CR					
	3	HM25600-3CR					
600 volt blocks							
70-100	1	HM60100-1CR	CVR-RH-60100	CVRI-RH-60100	—	Cu 1-3 AWG	6.2 (55)
					1/0-3 AWG; (2) Cu 4-6 AWG	Cu 4-6 AWG	5.6 (50)
	2	HM60100-2CR			2 4-6 AWG; (2) Cu 8 AWG	Cu 8 AWG	5.1 (45)
					8 AWG; (2) Cu 10-14 AWG	—	4.5 (40)
	3	HM60100-3CR			Cu 10-14 AWG; Al 10-12 AWG	—	4.0 (35)
110-200	1	HM60200-1CR	CVR-RH-60200	CVRI-RH-60200	250kcmil-1 AWG	Cu 3/0-1 AWG	42 (375)
	2	HM60200-2CR			2-6 AWG; (2) Cu 2-6 AWG	Cu 2-6 AWG	31 (275)
	3	HM60200-3CR					
225-400	1	HM60400-1CR	CVR-RH-60400	CVRI-RH-60400	600kcmil	N/A	57 (500)
	2	HM60400-2CR			500kcmil-4 AWG		51 (450)
	3	HM60400-3CR			(2) Cu 3/0 - 4 AWG		57 (500)
					(2) Al 3/0 - 4 AWG		34 (300)
450-600	1	HM60600-1CR	CVR-RH-60600	CVRI-RH-60600	2 (2) 500kcmil-4 AWG	N/A	51 (450)
	2	HM60600-2CR					
	3	HM60600-3CR					

* Covers sold separately.
** Open fuse indication requires 90 volts minimum and closed circuit to operate.
*** Ratings for copper and aluminum conductors except where otherwise noted.

Class K 30 and 60 amp block terminals and conductors

Terminal type	AWG type/range	AWG	Torque N•m (lb-in)
Box lug	75°C Cu 2-14, AL 2-8	2-3	5.6 (50)
		4-6	5.1 (45)
		8	4.5 (40)
		10-14	4.0 (35)
10-32 Phil-slot screw	75/90°C Cu 10-18	10-18	2.3 (20)
Screw with quick-connect*			
Pressure plate			

* 3/16" quick-connect terminal maximum amps dependent on female spade connector and wire ratings.

Recommended DIN-Rail stops for 30 and 60 amp blocks

Catalog no.	Description
BRKT-ND	DIN-Rail end stops
BRKT-NDSCREW2	

Data sheet no. 10487

RM modular 250 V and 600 V Class R fuse blocks

Class R modular fuse blocks enhance safety for any panel or electrical system design and are available for the full Class R fuse amp range.

All blocks are available as snap-together single-pole versions for toolless assembly of multiple poles at point of use, or as factory configured 2-, and 3-pole versions to meet stocking requirements.

All blocks are equipped with a fuse clip reinforcing spring to minimize temperature rise while maintaining reliable surface contact between the fuse and clip over the block's service life.

30 and 60 amp ferrule fuse blocks save panel space with the smallest width dimension on the market and feature DIN-Rail and panel mount versatility.

100 to 600 amp knifeblade fuse blocks feature phase barriers between poles for additional safety with up to four mounting holes per pole to increase installation flexibility. All knifeblade blocks meet UL creep and clearance requirements for Industrial Power Circuits (UL 508 and UL 845), with the 200 to 600 amp blocks meeting the higher UL creep and clearance requirements for Power Distribution Standards (UL 98, UL 67, UL 489, UL 891 and UL 869A).

All blocks are available with optional IP20 finger-safe high clarity, see-through covers for inspecting wire terminations or thermography measurements without removal. All covers enhance safety by featuring probe holes for easier, safer testing and a lockout/tagout capability. These covers also have optional open fuse indication to speed troubleshooting.

Easy circuit identification is available for 30 and 60 amp blocks and covers with universal marker labels.

Ratings

- Volts
  - 250 V
  - 600 V
- Amps up to 600
- SCCR 200 kA RMS Sym.

Agency information

- Blocks; UL Listed Guide IZLT and IZLT7, File E14853, CSA Certified 47235-6225-01, CE
- Covers; UL Listed Guide JDVS, File E58836, CSA Certified 47235-6225-01 (30 and 60 A)
- RoHS Compliant

Poles

- 1-, 2-, 3-pole units factory assembled
- Single-pole units snap together to create desired number of poles

Flammability ratings

- Blocks: UL 94V0, self-extinguishing
- Covers: UL 94HB, self-extinguishing

Operating and storage temperature range

- Blocks -40°C to +120°C
- Covers; Non-Indicating -40°C to +120°C, Indicating -20°C to +90°C*

* Indication requires minimum 90 V and closed circuit to illuminate.

Conductors

- See catalog numbers for details and torque specifications

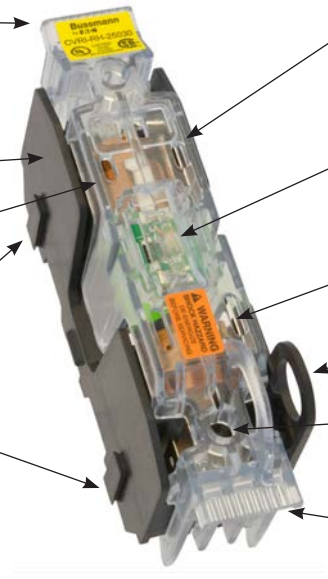

Finger grips on cover for easy removal

Standard phase barriers for additional safety

Standard fuse clip reinforcing spring reduces temperature rise

Toolless interlocking modular design for easy point-of-use assembly

Optional see-through, snap-on cover for easy visual inspection

Optional open fuse indication speeds troubleshooting

Vent slots improve cooling*

Lockout/tagout feature improves safety

Probe holes for easy testing without removing cover

DIN-rail or panel mounting on each pole provides installation flexibility for units rated up to 60 amps

*No fuse derating necessary.

Data sheet no. 10489

Class R 30 and 60 amp blocks and covers

Fuse amp range	Poles	Catalog no./terminal type: Box lug/ slot screw	Box lug/ hex screw	10-32 Phil-slot screw	screw with quick-connect	Pressure plate	Optional covers*: Indicating**	Non-indicating
250 volt blocks								
up to 30	1	RM25030-1CR	RM25030-1CHR	RM25030-1SR	RM25030-1QR	RM25030-1PR	CVRI-RH-25030	CVR-RH-25030
	2	RM25030-2CR	RM25030-2CHR	RM25030-2SR	RM25030-2QR	RM25030-2PR		
	3	RM25030-3CR	RM25030-3CHR	RM25030-3SR	RM25030-3QR	RM25030-3PR		
35 to 60	1	RM25060-1CR	RM25060-1CHR	—	—	—	CVRI-RH-25060	CVR-RH-25060
	2	RM25060-2CR	RM25060-2CHR					
	3	RM25060-3CR	RM25060-3CHR					
600 volt blocks								
up to 30	1	RM60030-1CR	RM60030-1CHR	RM60030-1SR	—	RM60030-1PR	CVRI-RH-60030	CVR-RH-60030
	2	RM60030-2CR	RM60030-2CHR	RM60030-2SR		RM60030-2PR		
	3	RM60030-3CR	RM60030-3CHR	RM60030-3SR		RM60030-3PR		
35 to 60	1	RM60060-1CR	RM60060-1CHR	—		—	CVRI-RH-60060	CVR-RH-60060
	2	RM60060-2CR	RM60060-2CHR					
	3	RM60060-3CR	RM60060-3CHR					

* Covers sold separately, order one cover per pole.
**Open fuse indication requires 90 volts minimum and closed circuit to operate.

Class R 30 and 60 amp block terminals and conductors

Terminal type	AWG type/range	AWG	Torque N•m (lb-in)
Box lug	75°C Cu 2-14, AL 2-8	2-3	5.6 (50)
		4-6	5.1 (45)
		8	4.5 (40)
		10-14	4.0 (35)
10-32 Phil-slot screw	75/90°C Cu 10-18	10-18	2.3 (20)
Pressure plate			
Screw with quick-connect*			

* 3/16" quick-connect terminal maximum amps dependent on female spade connector and wire ratings.

Recommended DIN-Rail stops for 30 and 60 amp blocks

Catalog no.	Description
BRKT-ND	DIN-Rail end stops
BRKT-NDSCREW2	

Data sheet no. 10489

Class R 100 to 600 amp knifeblade blocks and covers

Fuse amp range	Poles	Catalog no.	Optional covers*		Conductors***		Torque N•m (lb-in)
			Non-indicating	Indicating**	Solid and stranded	Fine stranded	
250 volt blocks							
70-100	1	RM25100-1CR	CVR-RH-25100	CVRI-RH-25100	—	Cu 1-3 AWG	6.2 (55)
					1/0-3 AWG; (2) Cu 4-6 AWG	Cu 4-6 AWG	5.6 (50)
	2	RM25100-2CR			2 4-6 AWG; (2) Cu 8 AWG	Cu 8 AWG	5.1 (45)
					8 AWG; (2) Cu 10-14 AWG	—	4.5 (40)
	3	RM25100-3CR			Cu 10-14 AWG; Al 10-12 AWG	—	4.0 (35)
110-200	1	RM25200-1CR	CVR-RH-25200	CVRI-RH-25200	250kcmil-1 AWG	Cu 3/0-1 AWG	42 (375)
	2	RM25200-2CR			2-6 AWG; (2) Cu 2-6 AWG	Cu 2-6 AWG	31 (275)
	3	RM25200-3CR					
225-400	1	RM25400-1CR	CVR-RH-25400	CVRI-RH-25400	600kcmil	N/A	57 (500)
	2	RM25400-2CR			500kcmil-4 AWG		51 (450)
	3	RM25400-3CR			(2) Cu 3/0 - 4 AWG		57 (500)
					(2) Al 3/0 - 4 AWG		34 (300)
450-600	1	RM25600-1CR	CVR-RH-25600	CVRI-RH-25600	2 (2) 500kcmil-4 AWG	N/A	51 (450)
	2	RM25600-2CR					
	3	RM25600-3CR					
600 volt blocks							
70-100	1	RM60100-1CR	CVR-RH-60100	CVRI-RH-60100	—	Cu 1-3 AWG	6.2 (55)
					1/0-3 AWG; (2) Cu 4-6 AWG	Cu 4-6 AWG	5.6 (50)
	2	RM60100-2CR			2 4-6 AWG; (2) Cu 8 AWG	Cu 8 AWG	5.1 (45)
					8 AWG; (2) Cu 10-14 AWG	—	4.5 (40)
	3	RM60100-3CR			Cu 10-14 AWG; Al 10-12 AWG	—	4.0 (35)
110-200	1	RM60200-1CR	CVR-RH-60200	CVRI-RH-60200	250kcmil-1 AWG	Cu 3/0-1 AWG	42 (375)
	2	RM60200-2CR			2-6 AWG; (2) Cu 2-6 AWG	Cu 2-6 AWG	31 (275)
	3	RM60200-3CR					
225-400	1	RM60400-1CR	CVR-RH-60400	CVRI-RH-60400	600kcmil	N/A	57 (500)
	2	RM60400-2CR			500kcmil-4 AWG		51 (450)
	3	RM60400-3CR			(2) Cu 3/0 - 4 AWG		57 (500)
					(2) Al 3/0 - 4 AWG		34 (300)
450-600	1	RM60600-1CR	CVR-RH-60600	CVRI-RH-60600	2 (2) 500kcmil-4 AWG	N/A	51 (450)
	2	RM60600-2CR					
	3	RM60600-3CR					

* Covers sold separately, order one cover per pole.
** Open fuse indication requires 90 volts minimum and closed circuit to operate.
*** Ratings for copper and aluminum conductors except where otherwise noted.

HM modular 250 V and 600 V Class H(K) power distribution fuse blocks

250 volt 60 amp modular blocks.

600 volt 30 and 60 amp modular blocks.

The patented 30 and 60 amp 250 V and 600 V Class H(K) power distribution fuse blocks use fewer wire connections to reduce watts loss and overall operating temperature of the panel, while simplifying panel layout. Available in ratings up to 400 amps, they use up to 57 percent less panel space while lowering inventory costs, and reducing installation time and labor by an average of 33 percent.

All blocks are equipped with a fuse clip reinforcing spring to minimize temperature rise while maintaining reliable surface contact between the fuse and clip over the block's service life.

Available as snap-together one-pole units for toolless assembly of multiple poles at point of use or factory configured 2- and 3-pole units to meet popular stocking requirements.

Optional see-through cover enhances safety with IP20 finger-safe protection, lockout/tagout capability and open circuit indication.

DIN-Rail and panel mount versatility allows one product to be used for multiple applications without incurring additional inventory cost.

Ratings

- Volts
  - 250 V
  - 600 V
- Amps up to 60 A
- SCCR 10 kA RMS Sym.

Agency information

- Blocks: UL Listed, Guide IZLT, File E14853, CSA Certified 47235 - 6225-01
- Covers: UL Listed, Guide JDVS, File E58836
- RoHS compliant

Poles

- 1-, 2-, 3-pole
- Single-pole units snap together to create desired number of poles

Flammability ratings

- Blocks: UL 94V0, self-extinguishing
- Covers: UL 94HB, self-extinguishing

Operating and storage temperature range

- Blocks: -40°C to +120°C
- Covers: Non-indicating -40°C to +120°C, Indicating -20°C to +90°C

Conductors

- 75°C Cu/Al (unless otherwise noted)

Accessories

- Optional IP20 finger-safe covers in indicating and non-indicating versions. Order one for each pole
- DIN-Rail end stops, catalog numbers BRKT-ND or BRKT-NDSCRW2

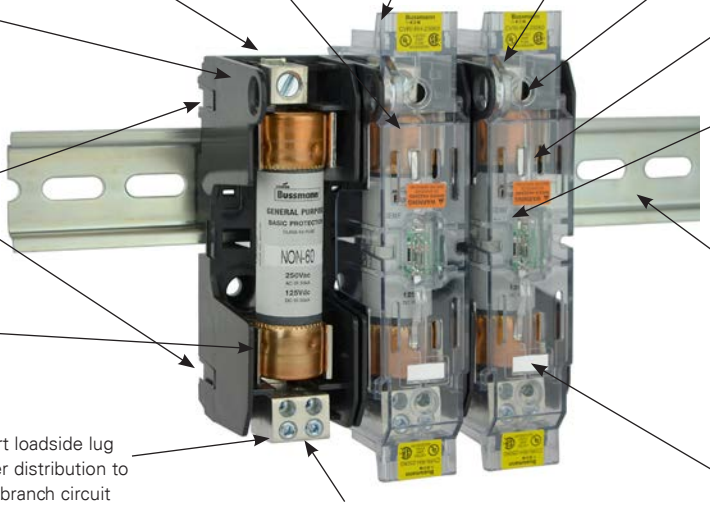

Data sheet no. 10490

Catalog no.	Optional covers*	Fuse amp range	Poles	Lineside (conductors per port) Conductors	Ports/ pole	Torque AWG	N•m (lb-in)	Loadside (conductors per port) Conductors	Ports/ pole	Torque AWG	N•m (lb-in)
250 volt blocks											
HM25060-1MW12	N/A	35-60	1	Cu 2-14 Al 2-8	2	2-4	5.6 (50)	Cu 2-14 Al 2-8	1	2-3	5.6 (50)
HM25060-2MW12			2			6-10	4.5 (40)			4-6	5.1 (45)
HM25060-3MW12			3			12-14	1.7 (15)			8	4.5 (40)
										10-14	4.0 (35)
HM25060-1MW14	CVR-RH-25060 CVRI-RH-25060**		1	Cu 2-14 Al 2-8	1	2-3	5.6 (50)	Cu (1) 8-14 Cu (2) 12-14*** Al (1) 8 Str Al (1) 10 Sol	4	Cu (1) 8	3.4 (30)
HM25060-2MW14			2			4-6	5.1 (45)			Cu (1) 10-14	2.8 (25)
HM25060-3MW14			3			8	4.5 (40)			Cu (2) 12-14	3.4 (30)
						10-14	4.0 (35)			Al (1) 8-10	3.4 (30)
HM25060-1MW24†	N/A		1	Cu 2-14 Al 2-8	2	2-4	5.6 (50)	Cu (1) 8-14 Cu (2) 12-14*** Al (1) 8 Str Al (1) 10 Sol	4	Cu (1) 8	3.4 (30)
HM25060-2MW24†			2			6-10	4.5 (40)			Cu (1) 10-14	2.8 (25)
HM25060-3MW24†			3			12-14	1.7 (15)			Cu (2) 12-14	3.4 (30)
										Al (1) 8-10	3.4 (30)
600 volt blocks											
HM60030-1MW14†	N/A	up to 30	1	Cu 2-14 Al 2-8	1	2-3	5.6 (50)	Cu (1) 8-14 Cu (2) 12-14*** Al (1) 8 Str Al (1) 10 Sol	4	Cu (1) 8	3.4 (30)
HM60030-2MW14†			2			4-6	5.1 (45)			Cu (1) 10-14	2.8 (25)
HM60030-3MW14†			3			8	4.5 (40)			Cu (2) 12-14	3.4 (30)
						10-14	4.0 (35)			Al (1) 8-10	3.4 (30)
HM60060-1MW12	CVR-RH-60060 CVRI-RH-60060**	35-60	1	Cu 2-14 Al 2-8	2	2-4	5.6 (50)	Cu 2-14 Al 2-8	1	2-3	5.6 (50)
HM60060-2MW12			2			6-10	4.5 (40)			4-6	5.1 (45)
HM60060-3MW12			3			12-14	1.7 (15)			8	4.5 (40)
										10-14	4.0 (35)
HM60060-1MW14			1	Cu 2-14 Al 2-8	1	2-3	5.6 (50)	Cu (1) 8-14 Cu (2) 12-14*** Al (1) 8 Str Al (1) 10 Sol	4	Cu (1) 8	3.4 (30)
HM60060-2MW14			2			4-6	5.1 (45)			Cu (1) 10-14	2.8 (25)
HM60060-3MW14			3			8	4.5 (40)			Cu (2) 12-14	3.4 (30)
						10-14	4.0 (35)			Al (1) 8-10	3.4 (30)
HM60060-1MW24†			1	Cu 2-14 Al 2-8	2	2-4	5.6 (50)	Cu (1) 8-14 Cu (2) 12-14*** Al (1) 8 Str Al (1) 10 Sol	4	Cu (1) 8	3.4 (30)
HM60060-2MW24†			2			6-10	4.5 (40)			Cu (1) 10-14	2.8 (25)
HM60060-3MW24†			3			12-14	1.7 (15)			Cu (2) 12-14	3.4 (30)
										Al (1) 8-10	3.4 (30)

* Order one cover per pole.
** With open fuse indication. 90 V minimum and closed circuit required for illumination.
*** Dual wire rated lugs with same wire size and stranding.
† Rated for use with 75°C/90°C Cu/Al conductors.

RM modular 250 V and 600 V Class R power distribution fuse blocks

RoHS 2011/65/EU

The patented 30 and 60 amp 250 V and 600 V Class R power distribution fuse blocks use fewer wire connections to reduce watts loss and overall operating temperature of the panel, while simplifying panel layout. Available in ratings up to 400 amps, they use up to 57 percent less panel space while lowering inventory costs, and reducing installation time and labor by an average of 33 percent.

High 200 kA SCCR helps achieve a higher assembly short-circuit current rating (SCCR) for compliance with NEC sections 110.10, 409.110(4), 409.22, 440.4(B), 670.3(A)(4) and 670.5.

All blocks are equipped with a fuse clip reinforcing spring to minimize temperature rise while maintaining reliable surface contact between the fuse and clip over the block's service life.

Available as snap-together one-pole units for toolless assembly of multiple poles at point of use or factory configured 2- and 3-pole units to meet popular stocking requirements.

Optional see-through cover enhances safety with IP20 finger-safe protection, lockout/tagout capability and open circuit indication.

DIN-Rail and panel mount versatility allows one product to be used for multiple applications without incurring additional inventory cost.

Ratings

- Volts
  - 250 V
  - 600 V
- Amps up to 60 A
- SCCR 200 kA RMS Sym.

Agency information

- Blocks; UL Listed Guide IZLT, File E14853, CSA Certified 47235 — 6225-01
- Covers; UL Listed Guide JDVS, File E58836
- RoHS compliant

Poles

- 1-, 2-, 3-pole
- Single-pole units snap together to create desired number of poles

Flammability ratings

- Blocks: UL 94V0, self-extinguishing
- Covers: UL 94HB, self-extinguishing

Operating and storage temperature range

- Blocks: -40°C to +120°C
- Covers; Non-indicating -40°C to +120°C, Indicating -20°C to +90°C

Conductors

- 75°C Cu/Al (unless otherwise noted)

Accessories

- Optional IP20 finger-safe covers in indicating and non-indicating versions. Order one for each pole.
- DIN-Rail end stops, catalog numbers BRKT-ND or BRKT-NDSCRW2.

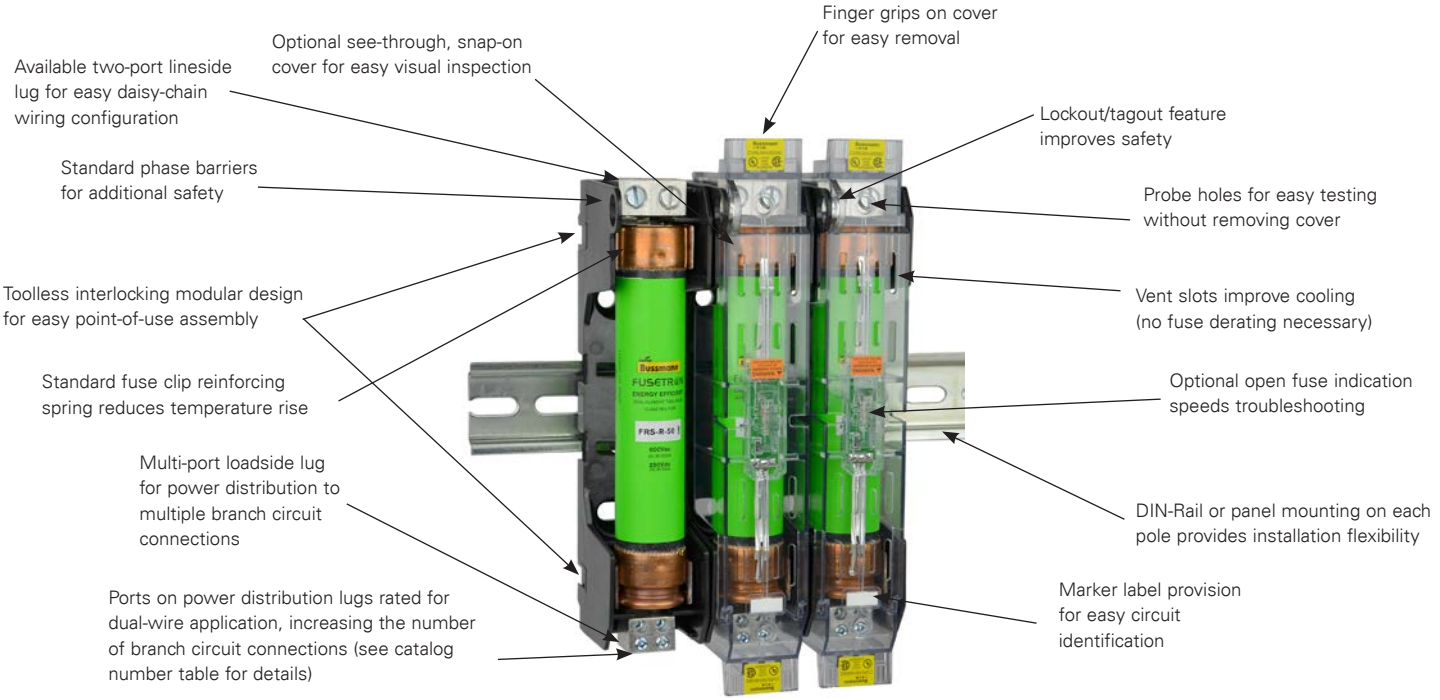

Data sheet no. 10491

Catalog no.	Optional covers*	Fuse amp range	Poles	Lineside (conductors per port) Conductors	Ports/ pole	Torque AWG	N•m (lb-in)	Loadside (conductors per port) Conductors	Ports/ pole	Torque AWG	N•m (lb-in)
250 Volts											
RM25060-1MW12	N/A	35 - 60	1	Cu 2-14 Al 2-8	2	2-4	5.6 (50)	Cu 2-14 Al 2-8	1	2-3	5.6 (50)
RM25060-2MW12			2			6-10	4.5 (40)			4-6	5.1 (45)
RM25060-3MW12			3			12-14	1.7 (15)			8	4.5 (40)
										10-14	4.0 (35)
RM25060-1MW14	CVR-RH-25060 CVRI-RH-25060**		1	Cu 2-14 Al 2-8	1	2-3	5.6 (50)	Cu (1) 8-14 Cu (2) 12-14*** Al (1) 8 Str Al (1) 10 Sol	4	Cu (1) 8	3.4 (30)
RM25060-2MW14			2			4-6	5.1 (45)			Cu (1) 10-14	2.8 (25)
RM25060-3MW14			3			8	4.5 (40)			Cu (2) 12-14	3.4 (30)
						10-14	4.0 (35)			Al (1) 8-10	3.4 (30)
RM25060-1MW24†	N/A		1	Cu 2-14 Al 2-8	2	2-4	5.6 (50)	Cu (1) 8-14 Cu (2) 12-14*** Al (1) 8 Str Al (1) 10 Sol	4	Cu (1) 8	3.4 (30)
RM25060-2MW24†			2			6-10	4.5 (40)			Cu (1) 10-14	2.8 (25)
RM25060-3MW24†			3			12-14	1.7 (15)			Cu (2) 12-14	3.4 (30)
										Al (1) 8-10	3.4 (30)
600 Volts											
RM60030-1MW14†	N/A	up to 30	1	Cu 2-14 Al 2-8	1	2-3	5.6 (50)	Cu (1) 8-14 Cu (2) 12-14*** Al (1) 8 Str Al (1) 10 Sol	4	Cu (1) 8	3.4 (30)
RM60030-2MW14†			2			4-6	5.1 (45)			Cu (1) 10-14	2.8 (25)
RM60030-3MW14†			3			8	4.5 (40)			Cu (2) 12-14	3.4 (30)
						10-14	4.0 (35)			Al (1) 8-10	3.4 (30)
RM60060-1MW12	CVR-RH-60060 CVRI-RH-60060**	35-60	1	Cu 2-14 Al 2-8	2	2-4	5.6 (50)	Cu 2-14 Al 2-8	1	2-3	5.6 (50)
RM60060-2MW12			2			6-10	4.5 (40)			4-6	5.1 (45)
RM60060-3MW12			3			12-14	1.7 (15)			8	4.5 (40)
										10-14	4.0 (35)
RM60060-1MW14			1	Cu 2-14 Al 2-8	1	2-3	5.6 (50)	Cu (1) 8-14 Cu (2) 12-14*** Al (1) 8 Str Al (1) 10 Sol	4	Cu (1) 8	3.4 (30)
RM60060-2MW14			2			4-6	5.1 (45)			Cu (1) 10-14	2.8 (25)
RM60060-3MW14			3			8	4.5 (40)			Cu (2) 12-14	3.4 (30)
						10-14	4.0 (35)			Al (1) 8-10	3.4 (30)
RM60060-1MW24†			1	Cu 2-14 Al 2-8	2	2-4	5.6 (50)	Cu (1) 8-14 Cu (2) 12-14*** Al (1) 8 Str Al (1) 10 Sol	4	Cu (1) 8	3.4 (30)
RM60060-2MW24†			2			6-10	4.5 (40)			Cu (1) 10-14	2.8 (25)
RM60060-3MW24†			3			12-14	1.7 (15)			Cu (2) 12-14	3.4 (30)
										Al (1) 8-10	3.4 (30)

* Order one cover per pole.
** With open fuse indication. 90 V minimum and closed circuit required for illumination.
*** Dual wire rated lugs with same wire size and stranding.
† Rated for use with 75°C/90°C Cu/Al conductors.

CH _ _ J _ Class J fuse holder

The CH_J_ Class J fuse holders are available in 30 and 60 amp ratings featuring IP20 finger-safe construction that can be either DIN-Rail or panel mounted. Available as factory configured 1-, 2- or 3-pole holders they are available with optional open fuse indication to speed troubleshooting.

30 A 60 A

Ratings

- Volts 600 V (or less)
- Amps
  - 30 A
  - 60 A
- SCCR 200 kA

Agency information

- UL Listed, Guide IZLT, File E14853, UL 4248/CSA 22.2 No. 4248.P, CE

Conductors

- Single 1-18 AWG and dual 3-18 AWG Cu solid and stranded conductors

Terminal torque ratings

- 10-18 AWG 24 lb-in
- 1-8 AWG 35 lb-in

Storage and operating temperature range*

- -20°C to +75°C

* For fuse selection on applications above or below 25°C, consult derating charts in the Bussmann Division publication no. 3002 "Selecting Protective Devices" (SPD).

Flammability rating UL 94V0

Features

- Choice of local fuse indication; *easy*ID™ viewing window (for seeing indicator on LPJ-SPI indicating fuse) or neon lamp
- Versatile 1-, 2- and 3-pole versions for 0-30 A and 35-60 A fuses with dual wire rated connections simplify wiring
- Improved electrical safety with IP20 finger-safe construction with lock-out/tag-out feature. 3-phase fuse extraction assures all phases are opened for service work
- Flexible panel/35mm DIN-Rail mounting

Dimensions — mm				
Fuse amps	**Poles**	**W**	**D**	**H**
Up to 30 A	1	32	70	115
	2	64		
	3	96		
35-60 A	1	40	83	125
	2	80		
	3	120		

Catalog no.								
Without indication*	**With indication****	**Poles**	**Amps**	**Volts (AC/DC)**	**IP20 finger-safe**	**AWG Cu wire range**	**Padlockable**	**Mounting**
CH30J1	CH30J1I	1	30	600	Yes	Single 1-18, dual 3-18	Yes	35mm DIN/ panel
CH30J2	CH30J2I	2						
CH30J3	CH30J3I	3						
CH60J1	CH60J1I	1	60	600	Yes	Single 1-18, dual 3-18	Yes	35mm DIN/ panel
CH60J2	CH60J2I	2						
CH60J3	CH60J3I	3						

* Local fuse indication 6 amps and above possible using Bussmann series LPJ_SPI permanent indication fuses.
**Neon indication non-fuse dependent, minimum voltage 90 V.

Data sheet no. 2144

JT(N)60030 and JT(N)60060 Safety J™ modular finger-safe Class J fuse holders

The Bussmann series Safety J™ modular fuse holders are available in indicating and non-indicating versions. Finger-safe construction improves electrical safety, while modular construction permits dovetailing the required number of poles* at point of use. DIN-Rail mount provides for easy installation. Optional open fuse indication speeds troubleshooting.

30 A version

60 A version

* JT(N)60030 cannot be dovetailed to JT(N)60060.

Ratings

- Volts 600 Vac
- Amps
  - Up to 30 A (JT(N)60030)
  - 35–60 A (JT(N)60060)
- SCCR
  - 200 kA RMS Sym.
  - 300 kA self certified using Bussmann series LPJ_SP fuses

Agency information

- Listed to UL 4248: Guide IZLT, File 14853, CSA Certified: Class 6225-01, File 47235. IP20 per IEC 60529, CE

Catalog numbers and conductor information

Holder amps	Catalog no. Non-indicating	Catalog no. Indicating*	75°C Cu conductor size (AWG) and type	Terminal torque N•m (lb-in)
30	JT60030	JTN60030	8-18 stranded, single or dual**	2.26 (20)
			10-18 solid, single or dual**	
60	JT60060	JTN60060	4-14 stranded or solid, single	5.1 (45)
			8-10 stranded, dual**	

* Indication non-fuse dependent, minimum 90 V.
**Dual wire applications must use conductors of the same size and type.

Dimensions — in (mm)

JT60030, JTN60030 Flammability rating: UL 94V0

Open fuse indication

Min. voltage: 90 V; neon lamp "ON" when fuse opens, voltage source and current path are present.

Features

- 300 kA SCCR with Bussmann series LPJ_SP fuses
- Rapid, flexible 35mm DIN-Rail mounting
- One piece interlocking design for assembling multiple pole blocks reduces inventory costs
- Removable fuse carrier allows fuse replacement away from base while maintaining finger-safe rating

Typical applications

- Industrial controls
- Process controls
- Small horsepower VFDs

Dimensions — in (mm)

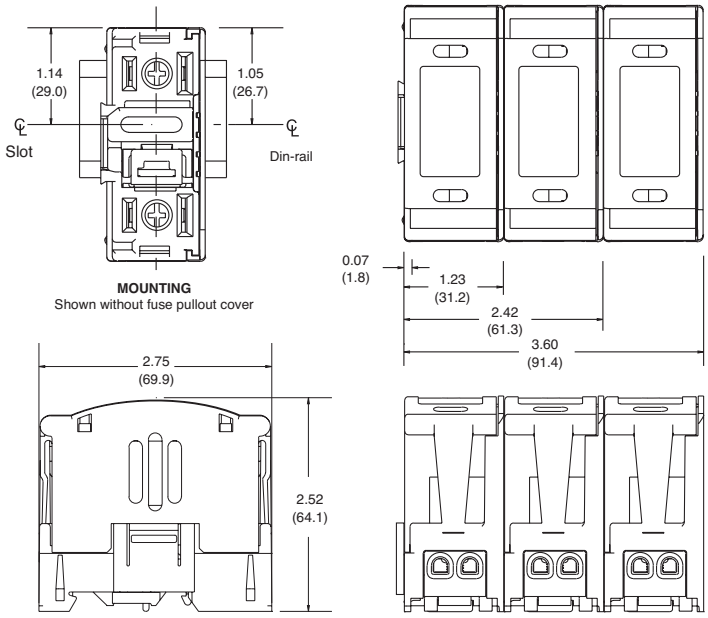

JT(N)60030

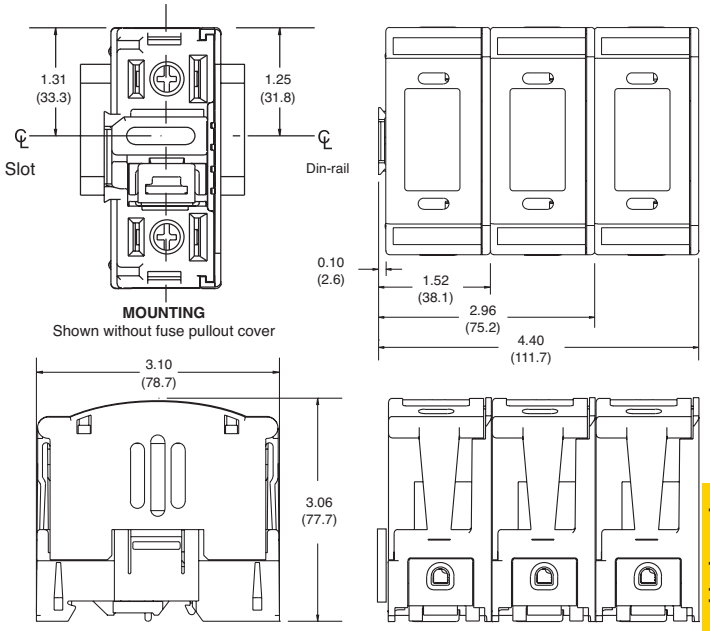

JT(N)60060

JP pyramid style 3-pole Class J fuse block

The Bussmann series JP (pyramid) open fuse block provides a means of mounting a three-pole 30 amp Class J fuse block with a footprint that is narrower than traditional solutions. See catalog numbers for terminals and conductor information.

Ratings

Volts 600 V

Amps 30 A

SCCR 200 kA RMS Sym.

Agency information

- UL Listed, UL 4248, Guide IZLT, File E14853, CSA Certified, C22.2 No. 39, Class 4225-04, File 47235, CE

Flammability rating UL 94V0

Mounting

- Panel
- 35mm DIN-Rail*

* To order DIN-Rail, specify catalog number DRL35MMLO (1 meter).

	Mounting		Terminals/AWG wire range/ type	
Catalog no.	Panel	DIN-Rail*	Pressure plate	Box lug
JP60030-3PR	Yes	No	10-14 Cu	—
JP60030-3CR	Yes	No	—	2-14 Cu/Al
JP60030-3COR	Yes	No	—	2-14 Cu
JP60030-3PRA	No	Yes	10-14 Cu	—
JP60030-3CRA	No	Yes	—	2-14 Cu/Al
JP60030-3CORA	No	Yes	—	2-14 Cu

* Requires adapter, order catalog number JPA-3.

Dimensions — in

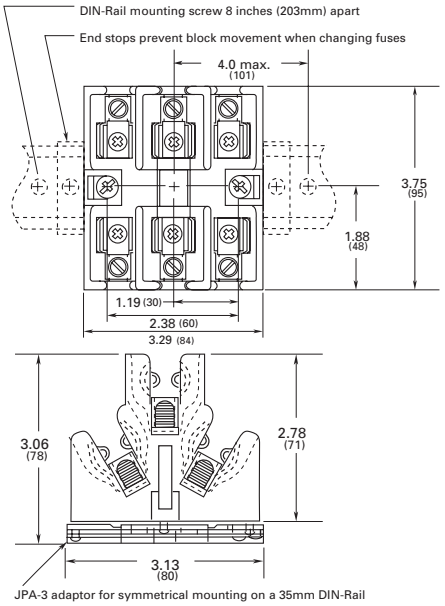

Data sheet no. 1108

JM modular Class J fuse blocks

RoHS 2011/65/EU

Class J modular fuse blocks enhance safety for any panel or electrical system design and are available for the full Class J fuse amp range.

All blocks are available as single-pole versions that snap together at point of use, or as factory configured 2-, and 3-pole versions.

All blocks are equipped with a fuse clip reinforcing spring to minimize temperature rise while maintaining reliable surface contact between the fuse and clip over the block's service life.

30 and 60 amp blocks are DIN-Rail and panel mount. Optional covers increase safety.

100 to 600 amp blocks are panel mount. Optional covers increase safety.

Ferrule fuse blocks up to 60 amps have the smallest width dimension on the market and feature DIN-Rail or panel mount versatility. Easy circuit identification is available for 30 and 60 amp blocks and covers with universal marker labels.

Knifeblade fuse blocks from 100 to 600 amps feature phase barriers for additional safety with up to four mounting holes per pole for increased installation flexibility. All knifeblade blocks meet UL creep and clearance requirements for Industrial Power Circuits (UL 508 and UL 845). The 200 to 600 amp blocks also meet the higher UL creep and clearance requirements for Power Distribution Standards (UL 98, UL 67, UL 489, UL 891 and UL 869A)

All blocks have optional IP20 finger-safe high clarity, see-through covers for inspecting wire terminations or thermography measurements without removal. All covers enhance safety by featuring probe holes for easier, safer testing and a lockout/tagout capability. These covers also have optional open fuse indication to speed troubleshooting.

Ratings

- Volts 600 V
- Amps up to 600 A
- SCCR 200 kA RMS Sym.

Agency information

- Blocks; UL Listed E14853 — IZLT and IZLT7, CSA Certified 47235-6225-01, CE, RoHS Compliant
- Covers; UL Listed E58836 - JDVS, CSA Certified 47235-6225-01 (30 and 60 A), RoHS Compliant

Poles

- 1-, 2-, 3-pole units factory assembled
- Single-pole units snap together to create desired number of poles

Flammability ratings

- Blocks: UL 94V0, self-extinguishing
- Covers: UL 94HB, self-extinguishing

Operating and storage temperature range

- Blocks -40°C to +120°C
- Covers; non-indicating -40°C to +120°C, indicating -20°C to +90°C*

* Indication requires minimum 90 V and closed circuit to illuminate.

Conductors

- See catalog numbers for details and torque specifications.

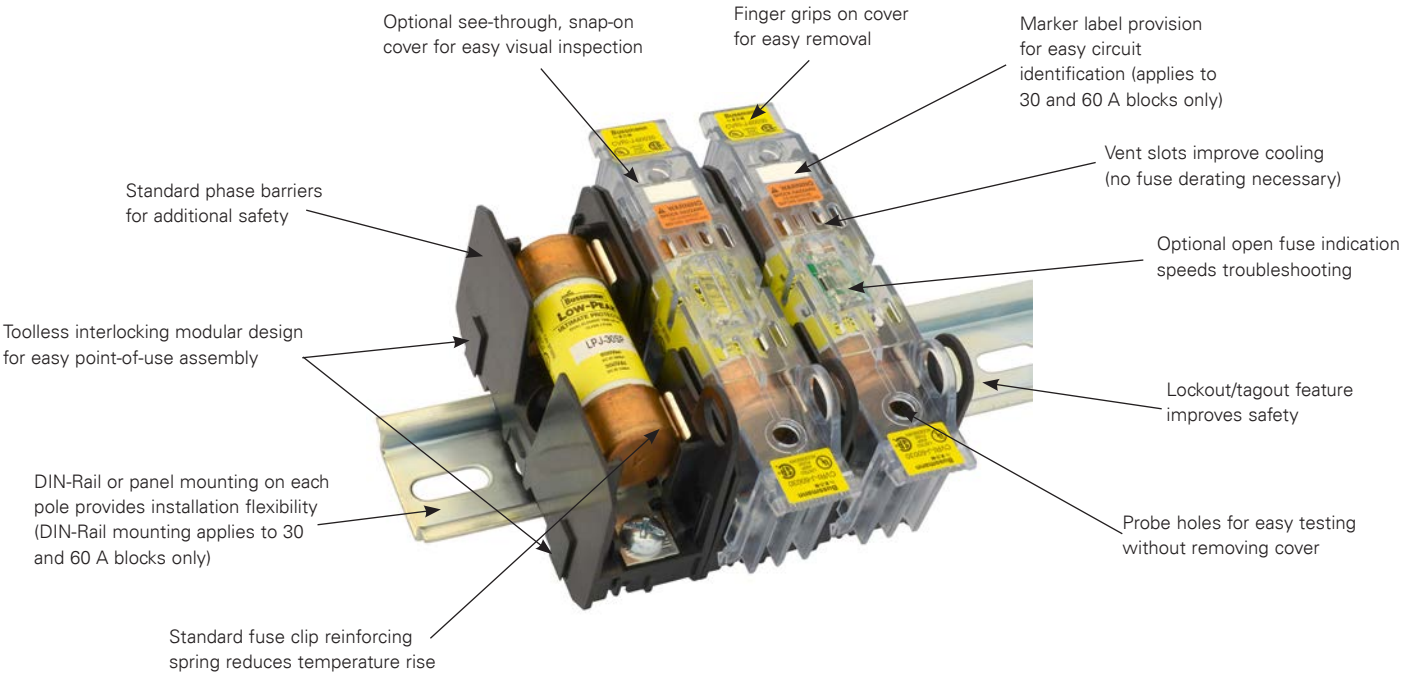

30 and 60 amp blocks and covers

Fuse amp range	Poles	Catalog no./terminal type				Optional covers*	
		Box lug/slot screw	Box lug/hex screw	10-32 Phil-slot screw	Pressure plate	Indicating**	Non-indicating
up to 30	1	JM60030-1CR	JM60030-1CHR	JM60030-1SR	JM60030-1PR	CVRI-J-60030	CVR-J-60030
	2	JM60030-2CR	JM60030-2CHR	JM60030-2SR	JM60030-2PR		
	3	JM60030-3CR	JM60030-3CHR	JM60030-3SR	JM60030-3PR		
35 to 60	1	JM60060-1CR	JM60060-1CHR	—	—	CVRI-J-60060	CVR-J-60060
	2	JM60060-2CR	JM60060-2CHR				
	3	JM60060-3CR	JM60060-3CHR				

* Covers sold separately, one cover per pole.
**Open fuse indication requires 90 volts minimum and closed circuit to operate.

30 and 60 amp block terminals and conductors

Terminal type	AWG type/range	AWG	Torque N•m (lb-in)
Box lug	75°C Cu 2-14, Al 2-8	2-3	5.6 (50)
		4-6	5.1 (45)
		8	4.5 (40)
		10-14	4.0 (35)
10-32 Phil-slot screw	75/90°C Cu 10-18	10-18	2.3 (20)
Pressure plate			

100 to 600 amp knifeblade blocks and covers

Fuse amp range	Poles	Catalog no.	Optional covers*		Conductors***		
			Non-indicating	Indicating**	Solid and stranded	Fine stranded	Torque N•m (lb-in)
70-100	1	JM60100-1CR	CVR-J-60100-M	CVRI-J-60100-M	—	Cu 1-3 AWG	6.2 (55)
					1/0-3 AWG; (2) Cu 4-6 AWG	Cu 4-6 AWG	5.6 (50)
	2	JM60100-2CR			2 4-6 AWG; (2) Cu 8 AWG	Cu 8 AWG	5.1 (45)
					8 AWG; (2) Cu 10-14 AWG	—	4.5 (40)
	3	JM60100-3CR			Cu 10-14 AWG; Al 10-12 AWG	—	4.0 (35)
110-200	1	JM60200-1CR	CVR-J-60200-M	CVRI-J-60200-M	250kcmil-1 AWG	Cu 3/0-1 AWG	42 (375)
	2	JM60200-2CR			2-6 AWG; (2) Cu 2-6 AWG	Cu 2-6 AWG	31 (275)
	3	JM60200-3CR					
225-400	1	JM60400-1CR	CVR-J-60400-M	CVRI-J-60400-M	600kcmil	N/A	57 (500)
	2	JM60400-2CR			500kcmil-4 AWG		51 (450)
	3	JM60400-3CR			(2) Cu 3/0 - 4 AWG		57 (500)
	1	JM60400-1MW22					
	2	JM60400-2MW22			(2) Al 3/0 - 4 AWG		34 (300)
	3	JM60400-3MW22					
450-600	1	JM60600-1CR	CVR-J-60600	CVRI-J-60600	2 (2) 500kcmil-4 AWG	N/A	51 (450)
	2	JM60600-2CR					
	3	JM60600-3CR					

* Covers sold separately.
** Open fuse indication requires 90 volts minimum and closed circuit to operate.
*** Ratings for copper and aluminum conductors except where otherwise noted.

Data sheet no. 10488

JM modular Class J power distribution fuse blocks

RoHS 2011/65/EU

The patented Class J power distribution fuse blocks use fewer wire connections to reduce watts loss and overall operating temperature of the panel, while simplifying panel layout. Available in ratings up to 400 amps, they use up to 65 percent less panel space while lowering inventory costs, and reducing installation time and labor by an average of 33 percent.

All blocks are equipped with a fuse clip reinforcing spring to minimize temperature rise while maintaining reliable surface contact between the fuse and clip over the block's service life.

30 and 60 amp blocks.

100, 200 and 400 amp blocks.

Available as snap-together one-pole units for toolless assembly of multiple poles at point of use or factory configured 2- and 3-pole units to meet popular stocking requirements.

The high 200 kA SCCR helps achieve a higher assembly short-circuit current rating (SCCR) for compliance with NEC sections 110.10, 409.110(4), 409.22, 440.4(B), 670.3(A)(4) and 670.5.

30 and 60 amp blocks feature DIN-Rail and panel mount versatility, while 100 to 400 amp blocks are panel mount.

All blocks are available with optional see-through cover to enhance safety with IP20 finger-safe protection, lockout/tagout capability and open circuit indication. See catalog number tables for details.

Ratings

- Volts 600 V
- Amps up to 400 A
- SCCR 200 kA Sym. RMS

Agency information

- Blocks; UL Listed, Guide IZLT, File E14853, CSA Certified 47235 — 6225-01
- Covers; UL Listed, Guide JDVS, File E58836
- RoHS compliant

Poles

- 1-, 2-, 3-pole
- Single-pole units snap together to create desired number of poles

Mounting

- 30 and 60 amp blocks DIN-Rail and panel mount
- 100, 200 and 400 amp blocks panel mount only

Flammability ratings

- Blocks, UL 94V0, self-extinguishing
- Covers; UL 94HB, self-extinguishing

Operating and storage temperature range

- Blocks, -40°C to +120°C
- Covers; non-indicating -40°C to +120°C, indicating -20°C to +90°C

Conductors

- 75/90°C Cu/Al (unless otherwise noted)

Accessories

- IP20 finger-safe covers in indicating and non-indicating versions. Order one for each pole.
- DIN-Rail end stops for blocks rated up to 60 amps, catalog numbers BRKT-ND or BRKT-NDSCRW2

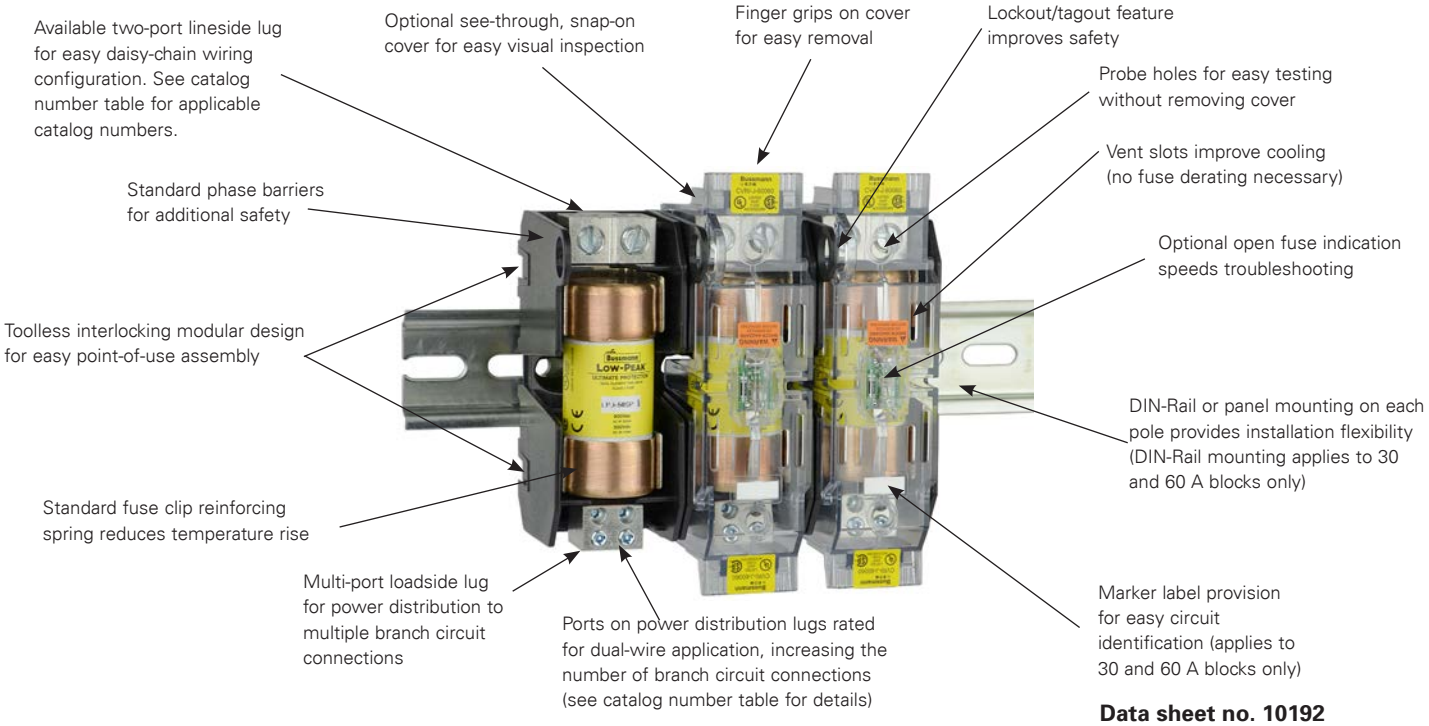

Data sheet no. 10192

Catalog no.	Optional covers*	Fuse amp range	Poles	Lineside (conductors per port) Conductors	Ports/ pole	Torque AWG	N•m (lb-in)	Loadside (conductors per port) Conductors	Ports/ pole	Torque AWG	N•m (lb-in)
JM60030-1MW14	N/A	Up to 30	1	Cu 2-14 Al 2-8	1	2-3	5.6 (50)	Cu (1) 8-14 Cu (2) 12-14*** Al (1) 8 Str Al (1) 10 Sol	4	Cu (1) 8	3.4 (30)
JM60030-2MW14			2			4-6	5.1 (45)			Cu (1) 10-14	2.8 (25)
JM60030-3MW14			3			8	4.5 (40)			Cu (2) 12-14	3.4 (30)
						10-14	4.0 (35)			Al (1) 8-10	3.4 (30)
JM60060-1MW12†	CVR-J-60060 CVRI-J-60060**	35 - 60	1	Cu 2-14 Al 2-8	2	2-4	5.6 (50)	Cu 2-14 Al 2-8	1	2-3	5.6 (50)
JM60060-2MW12†			2			6-10	4.5 (40)			4-6	5.1 (45)
JM60060-3MW12†			3			12-14	1.7 (15)			8	4.5 (40)
										10-14	4.0 (35)
JM60060-1MW14†			1	Cu 2-14 Al 2-8	1	2-3	5.6 (50)	Cu (1) 8-14 Cu (2) 12-14*** Al (1) 8 Str Al (1) 10 Sol	4	Cu (1) 8	3.4 (30)
JM60060-2MW14†			2			4-6	5.1 (45)			Cu (1) 10-14	2.8 (25)
JM60060-3MW14†			3			8	4.5 (40)			Cu (2) 12-14	3.4 (30)
						10-14	4.0 (35)			Al (1) 8-10	3.4 (30)
JM60060-1MW24			1	Cu 2-14 Al 2-8	2	2-4	5.6 (50)	Cu (1) 8-14 Cu (2) 12-14*** Al (1) 8 Str Al (1) 10 Sol	4	Cu (1) 8	3.4 (30)
JM60060-2MW24			2			6-10	4.5 (40)			Cu (1) 10-14	2.8 (25)
JM60060-3MW24			3			12-14	1.7 (15)			Cu (2) 12-14	3.4 (30)
										Al (1) 8-10	3.4 (30)
JM60100-1MW14	CVR-J-60100-M CVRI-J-60100-M**	70 - 100	1	Cu 1/0-14 Al 1/0-12	1	1/0-3; Cu (2) 4-6	5.6 (50)	Cu (1) 4-14 Al (1) 4-8 Cu (2) 10-14***	4	4-6	4.0 (35)
JM60100-2MW14			2			4-6; Cu (2) 8	5.0 (45)			8	2.8 (25)
JM60100-3MW14			3			8; Cu (2) 10-14	4.5 (40)			Cu 10-14	2.3 (20)
						10-14	4.0 (35)			(2) 10-14	3.4 (30)
JM60200-1MW16	CVR-J-60200-M CVRI-J-60200-M**	110-200	1	Cu/Al (1) 250kcmil-6 Cu (2) 2-6	1	250kcmil-1	42 (375)	Cu (1) 4-14 Al (1) 4-8 Cu (2) 10-14***	6	4-6	4.0 (35)
JM60200-2MW16			2							8	2.8 (25)
JM60200-3MW16			3			2-6	31 (275)			10-14	2.3 (20)
										(2) 10-14	3.4 (30)
JM60400-1MW16	CVR-J-60400-M CVRI-J-60400-M**	225-400	1	Cu/Al (1) 600kcmil-4 Cu/Al (2) 3/0-4	1	600kcmil	57 (500)	Cu (1) 2-14 Al (1) 2-8 Cu (2) 8-14***	6	2-3	5.6 (50)
JM60400-2MW16			2			500kcmil-4	51 (450)			4-6	5.0 (45)
JM60400-3MW16			3							8	4.5 (40)
										(2) 8	4.5 (40)
						Cu (2) 3/0-4 Al (2) (3/0-4	57 (500)			10-14	4.0 (35)
							34 (300)			(2) 10-14	4.5 (40)
JM60400-1MW26			1	Cu/Al 350kcmil-6	2	350kcmil-1	42 (375)	Cu (1) 2-14 Al (1) 2-8 Cu (2) 8-14***	6	2-3	5.6 (50)
JM60400-2MW26			2							4-6	5.0 (45)
JM60400-3MW26			3							8	4.5 (40)
										(2) 8	4.5 (40)
						2-6	31 (275)			10-14	4.0 (35)
										(2) 10-14	4.5 (40)

* Order one cover per pole.
** With open fuse indication. 90 V minimum and closed circuit required for illumination.
***Dual wire rated lugs with same wire size and stranding.
† Rated for 75°C Cu/Al conductors. Conductors with higher ratings may be used with appropriate derating.

Data sheet no. 10192

T300 300 volt Class T fuse blocks

Bussmann series T300 fuse blocks are open fuse blocks for use with Class T fuses up to 600 amps in various pole configurations from 1- to 4-poles. T300 blocks use Bussmann series JJN fuses.

Ratings

- Volts 300 V
- Amps up to 600 A
- SCCR 200 kA RMS Sym.

Agency information

- UL Listed UL 4248, Guide IZLT, File E14853, CSA Certified, Class 6225-01, File 47235, CE

Flammability rating UL 94V0

Features

- Provide 1-, 2-, 3- and 4-pole housing for 300 Vac Class T fuses
- High 200 kA RMS Sym. Short-Circuit Current Rating
- Class T fuse blocks have a small foot print, providing substantial space savings in equipment

Typical applications

- 300 V or less control systems
- 300 V or less individual control circuits

Catalog numbers

Catalog no./terminals					Terminal AWG wire range/type
Screw	Box lug	Amps	Poles	Fig.	
T30030-2SR	T30030-2CR	Up to 30	2	1	SR 10-18 Cu CR 6-14 Cu/Al
T30030-3SR	T30030-3CR		3		
T30030-4SR	T30030-4CR		4		
T30060-2SR	T30060-2CR	31-60	2		CR 2-14 Cu/Al SR 10-18 Cu
T30060-3SR	T30060-3CR		3		
T30060-4SR	T30060-4CR		4		
—	T30100-1CR	61-100	1	2	1/0-8 Cu/Al
—	T30100-2CR		2		
—	T30100-3CR		3		
—	T30200-1C	101-200	1	3	250kcmil-6 Cu/Al
—	T30200-3C		3	4	
—	T30400-1C	201-400	1	5	600kcmil-2/0 Cu/Al
—	T30600-1C	401-600	1	6	(2) 600kcmil-4/0 Cu/Al

Dimensions — in

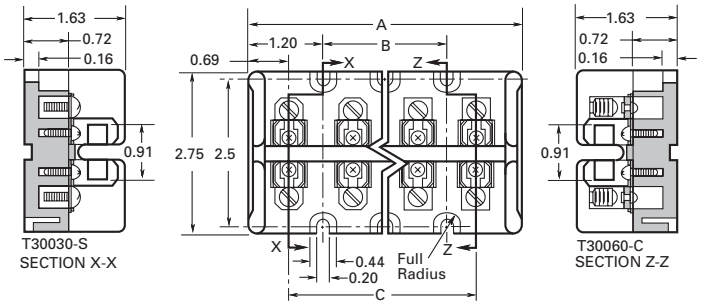

Figure 1. Up to 60 A

	Dimensions — in		
Catalog no.	A	B	C
T30030-2	2.41	—	1.03
T30060-2	2.41	—	1.03
T30030-3	3.44	1.03	2.06
T30060-3	3.44	1.03	2.06
T30030-4	4.47	2.06	3.09
T30060-4	4.47	2.06	3.09

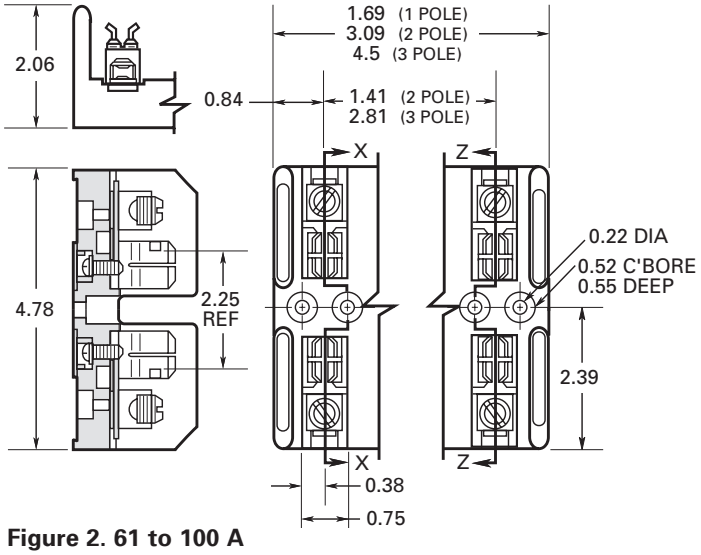

Figure 2. 61 to 100 A

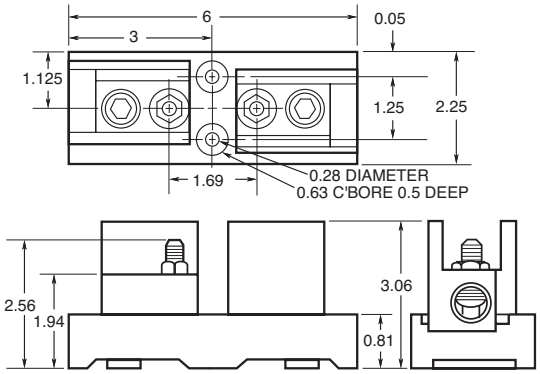

Figure 3. 101 to 200 A

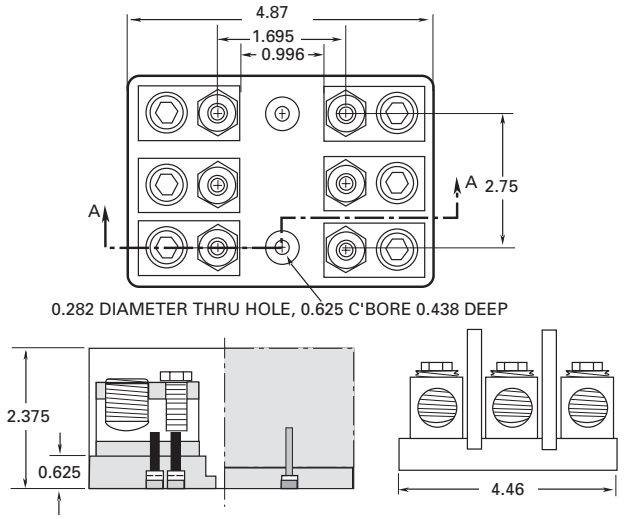

Figure 4. 200 A

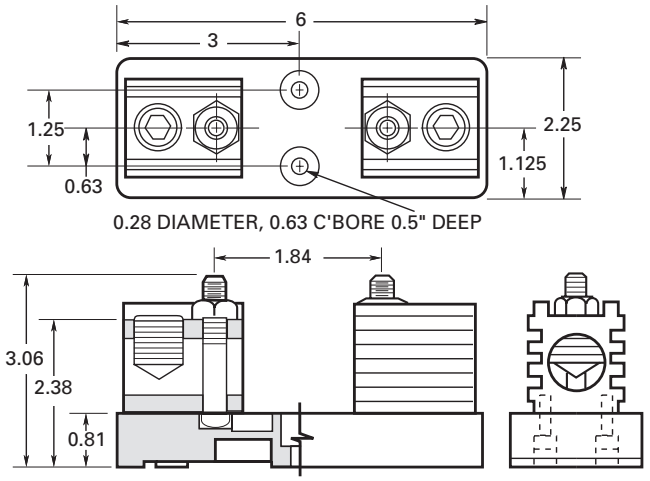

Figure 5. 201 to 400 A

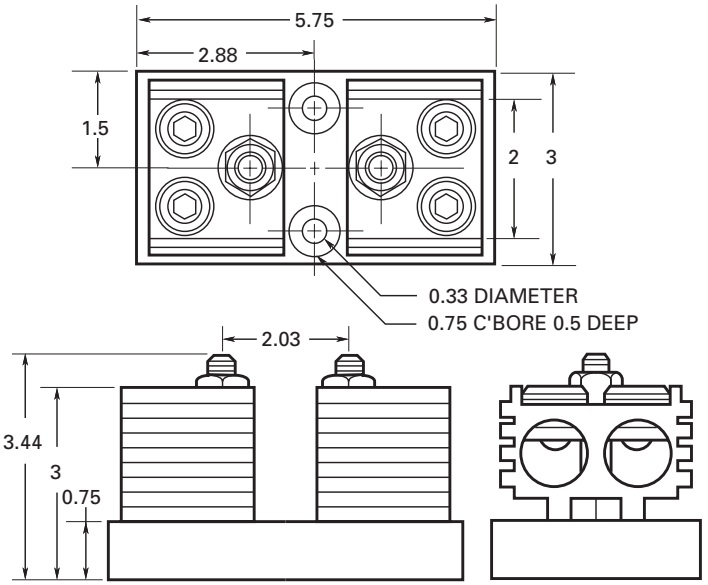

Figure 6. 401 to 600 A

Data sheet no. 1115

T600 600 volt Class T fuse blocks

Bussmann series T600 fuse blocks are open fuse blocks for use with Class T fuses up to 600 amps in various pole configurations from 1- to 3-poles. T600 blocks use Bussmann series JJS fuses.

Ratings

- Volts 600 V
- Amps up to 600 A
- SCCR 200 kA RMS Sym.

Agency information

- UL Listed, UL 4248, Guide IZLT, File E14853, CSA Certified, Class 6225-01, File 47235, CE

Flammability rating UL 94V0

Features

- Provide 1-, 2- and 3-pole housing for 600 Vac Class T fuses.
- High 200 kA RMS Sym. Short-Circuit Current Ratings
- Class T fuse blocks have a small foot print, providing substantial space savings in equipment

Typical applications

- 600 V or less control systems
- 600 V or less individual control circuits

Catalog no./terminals					
Screw	Box lug	Amps	Poles	Fig.	Terminal AWG range/type
T60030-1SR	T60030-1CR	Up to 30	1	1	SR 10-18 Cu CR 2-14 Cu/Al
T60030-2SR	T60030-2CR		2		
T60030-3SR	T60030-3CR		3		
T60060-1SR	T60060-1CR	31-60	1	2	SR 10-18 Cu CR 2-14 Cu/Al
T60060-2SR	T60060-2CR		2		
T60060-3SR	T60060-3CR		3		
—	T60100-1C	61-100	1	3	2/0-14 Cu/Al
—	T60100-2C		2		
—	T60100-3C		3		
—	T60200-1C	101-200	1	4	250kcmil-6 Cu/Al
—	1B0089*		3	5	
—	T60400-1C	201-400	1	6	600kcmil-2/0 Cu/Al
—	T60600-1C	401-600	1	7	(2) 600kcmil-4/0 Cu/Al

* UL Listed, Guide IZLT, File E14853, CSA Certified Class 6225-01, File 21455M18.

Dimensions — in

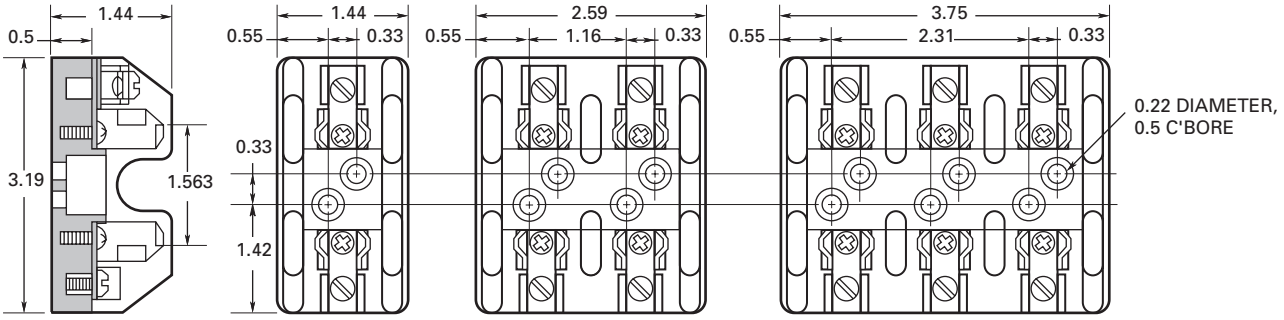

Figure 1. Up to 30 A

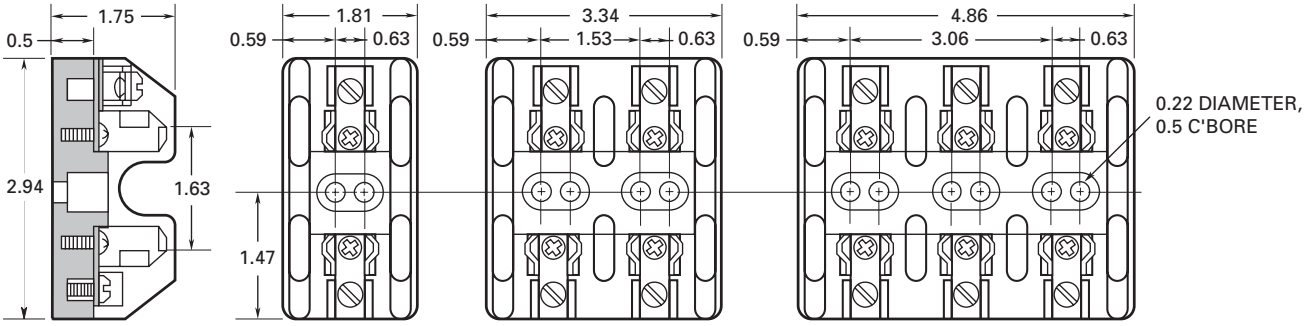

Figure 2. 31 to 60 A

Dimensions — in

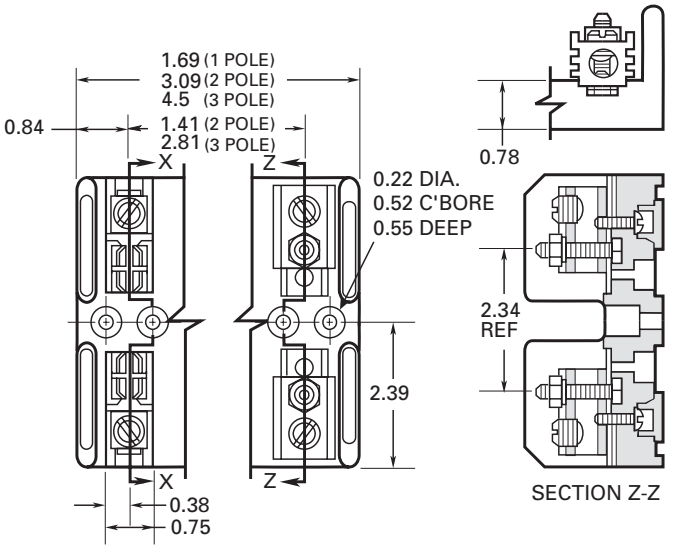

Figure 3. 61 to 100 A

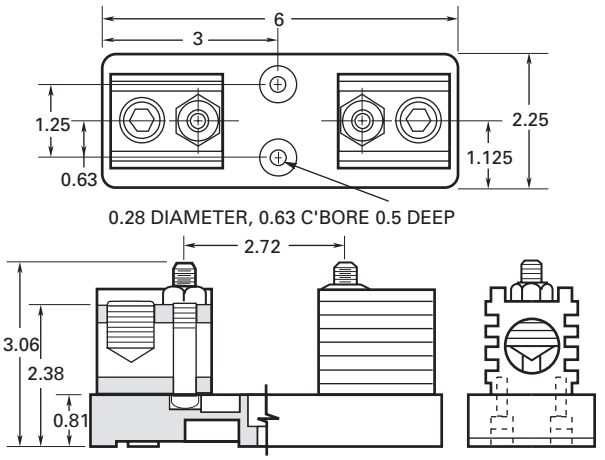

Figure 6. 201 to 400 A

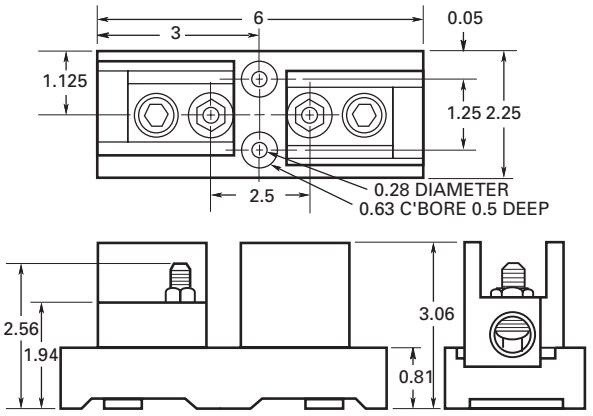

Figure 4. 101 to 200 A (T60200-1C)

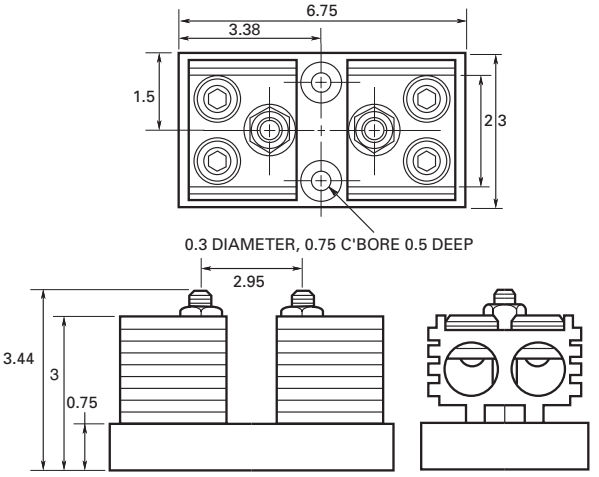

Figure 7. 401 to 600 A

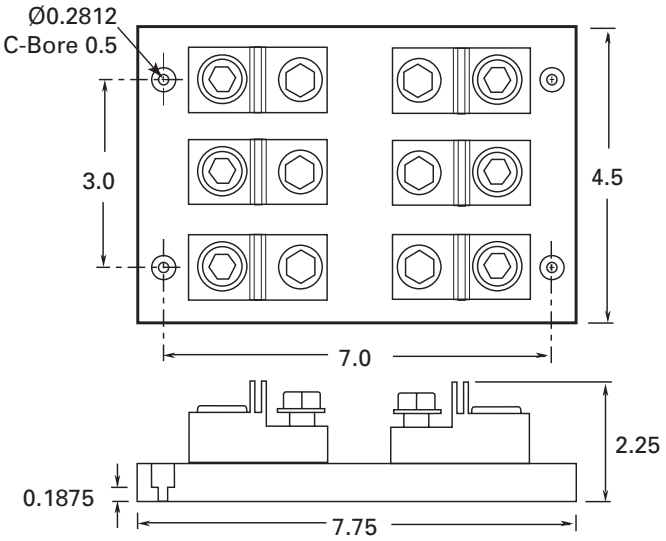

Figure 5. 101 to 200 A (1B0089)

Data sheet no. 1116

Modular open-center fuse blocks

BH modular type

BH modular fuse blocks are for use with various blade and ferrule (cylindrical) Bussmann series high speed, and Class J and T fuses.

See the data sheets referenced in the catalog number table for block/fuse compatibility.

Ratings

- Volts 700 V
- Amps
  - BH-0xxx 100 A
  - BH-1xxx and BH-2xxx 400 A
  - BH-3xxx 700 A
- SCCR 200 kA RMS Sym. or fuse IR, whichever is lower

Agency information

- UL Recognized, Guide EZLT2, File No. E14853 up to 700 V, CSA Certified, Class 6225-01, File No. 47235 up to 700 V, RoHS compliant, CE

Features

- A wide range of mounting configurations
- High Short-Circuit Current Rating (SCCR) based upon installed fuse up to 200 kA RMS Sym.

Typical applications

- Solid state control circuits
- VFDs
- UPS systems

Refer to the data sheet numbers below for the catalog code description information.

Cat no.	Data sheet	Cat no.	Data sheet	Cat no.	Data sheet	Cat no.	Data sheet
BH-0001	1200	BH-1001	1201	BH-2001	1202	BH-3003	1203
BH-0002		BH-1002		BH-2002		BH-3004	
BH-0003		BH-1003		BH-2003		BH-3033	
BH-0111		BH-1131		BH-2031		BH-3144	
BH-0112		BH-1132		BH-2032		BH-3145	
BH-0113		BH-1133		BH-2033			
BH-0121							
BH-0122							

Data sheet no. 1200 (BH-0), 1201 (BH-1), 1202 (BH-2), 1203 (BH-3)

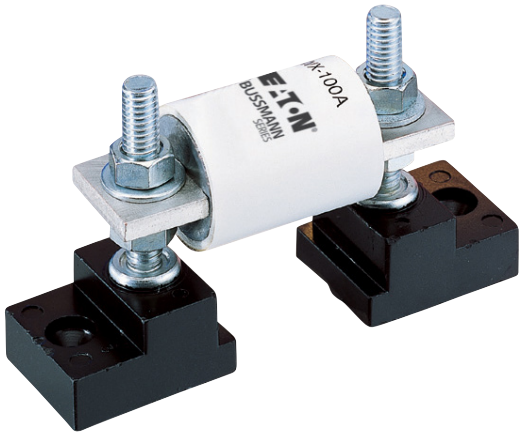

C5268 stud type

The simpler design is the C5268 modular fuse block. With this design, the fuse terminal and cable (with termination) are mounted on the same stud, minimizing labor needed for installation. The stud type block is available in the configurations shown in the table below.

Catalog no.	Max fuse amp rating	Stud
C5268-1	200	5/16-18 x 1"
C5268-2		5/16-18 x 1-3/4"
C5268-3		5/16-18 x 3/4"
C5268-4	100	1/4-20 x 1"
C5268-5		1/4-20 x 1-3/4"

1BS10x connector type

Eaton's Bussmann series also offers a modular style fuse block that utilizes a tin-plated connector for wire termination and heat dissipation) with a plated-steel stud for fuse mounting. The connector type fuse block is available in the RoHS compliant configurations shown below. Consult your Bussmann series product representative for additional product details.

Catalog no.	Max rated voltage	Max fuse amp rating
1BS101	600	100
1BS102		400
1BS103		
1BS104		600

Data sheet no. 1206 (1BS101), 1207 (1BS102), 1208 (1BS103), 1209 (1BS104)

SD and TD blocks for NH size fuses

1-pole SD and 3-pole TD fuse blocks for NH fuse sizes 00 to 4 are specifically designed for use with Bussmann series bladed NH fuses. See data sheet 720109 (690 V gG/gL) and 10164 (500 V gG/gL).

For NH 1 to 3 photovoltaic fuse applications, see the single-pole SD-PV blocks in the PV fuse section.

Shown with optional shroud kit

Ratings

- Volts
  - 690 Vac
  - 1000 Vac (Sd1-D only)
- Amps 160 to 1600 A
- SCCR up to 120 kA

Agency information

- IEC 60269-1 and 2
- VDE 0636-1 and 2
- RoHS compliant

Poles

- 1 and 3

Protection level

- IEC - IP20 with shroud kit installed and shielding of any exposed terminal lugs
- UL - Installation of shroud kit decreases the likelihood of incidental terminal contact. To ensure compliance to IP20 specifications per UL the installer must make additional provisions.

Temperature range

- Operating -20°C to +70°C
- Storage -40°C to +80°C

Mounting

- 35mm DIN-Rail
- Panel

Flammability rating

- UL 94V0

Catalog no.	Poles	Description	NH fuse size	Amps
SD00-D	1	NH fuse block	000 and 00	160
TD00-D	3			
TD00-DI*				
SD1-D	1		1	250
TD1-D	3			
SD2-D	1		2	400
TD2-D	3			
SD3-D	1		3	630
TD3-D	3			
SD4-D	1		4	1250
SD4-S1600**				1600

* 3-pole integral base molding.
**Panel mount only.

Accessories

Fuse extraction handle

Catalog no.	Size	Amps
FEH	NH00 to 3	160 to 630

Shroud kits

Catalog no.†	Fuse block	Fuse size	Amps	Description
SD12-SK	SD1/TD1	NH1	250	Includes 2 shrouds and 1 fuse cover
SD12-SK	SD2/TD2	NH2	400	
SD3-SK	SD3/TD3	NH3	630	

† Order one kit per pole.

Phase barrier kits

Catalog no.††	Fuse block	Fuse size	Amps	Description
SD00-PB	SD00/TD00	NH00	160	2 phase barriers and 2 ganging links
SD12-PB	SD1/TD1	NH1	250	
SD12-PB	SD2/TD2	NH2	400	
SD3-PB	SD3/TD3	NH3	630	

††Order one kit per 3-pole assembly.

Microswitches

Catalog no.	Ratings
BVL50	6 A 250 Vac
170H0236	2 A 250 Vac
170H0238	2 A 250 Vac

Neutral links

Catalog no.	Fuse size	Amps
SDL-00	NH00	160
SDL-1	NH1	250
SDL-2	NH2	400
SDL-3	NH3	630

Data sheet no. 10163

HTB panel mount fuse holders for 5x20mm and 1/4" x 1-1/4" fuses

Panel mount holders with knob-type and screwdriver-type carriers made from high temperature, flame retardant thermoplastic (UL 94V0) and tin-plated brass quick-connect terminals.

Knob-type fuse carrier

Screwdriver-type fuse carrier

RoHS 2011/65/EU

Ratings*

Volts 250 V

Amps 20 A max*

- Insulation resistance (per IEC #257) 10,000 ohms @ 500 Vdc
- Contact resistance (per IEC #257) 0.005 ohms max @ 1 A
- Standoff voltage (per IEC #257) 480 V/Mil @ 0.125" thickness

* See data sheet 2119 for ratings by holder configuration.

Agency information

- UL Recognized, Guide IZLT2, File E14853, 1/4" dia. fuse @ 20 A, 5mm dia. fuse @16 A @ 250 V, CSA Class 6225-01 File 47235 @ 16 A @ 250 V, VDE Certified, 136128, HTB-XXM, SEMKO Certification, Ref. 0146149/01, HTB-XXM, RoHS compliant, CE

Operating temperature range

- -55°C to +85°C

Mounting

- Rear hex nut; HTB-2_, HTB3_, HTB-4_, HTB-5_
- Front hex nut; HTB-6_
- Snap-in; HTB-8_, HTB-9_

Splash-proof versions

- Splash-proof versions available by adding "-SP" suffix to the catalog number.

Catalog numbers and dimensions — in (mm)

Holder dimensions	Max panel thickness — in (mm)	Solder / 3/16" QC terminal: In-line (0.34 (8.7))	Solder / 3/16" QC terminal: Rt. angle (0.33 (8.3))	1/4" QC terminal: In-line (0.47 (11.9))	1/4" QC terminal: Rt. angle (0.45 (11.5))	Fuse carrier*: 1/4" I = inches	Fuse carrier*: 5mm M = metric
Knob-type carrier — common length 1.69 (43)							
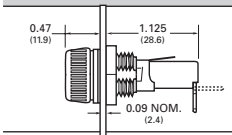	0.3 (8)	HTB-22I-R	HTB-24I-R	HTB-26I-R	HTB-28I-R	X	
		HTB-22M-R	HTB-24M-R	HTB-26M-R	HTB-28M-R		X
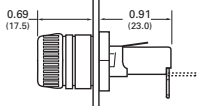	0.125 (3)	HTB-42I-R	HTB-44I-R	HTB-46I-R	HTB-48I-R	X	
		HTB-42M-R	HTB-44M-R	HTB-46M-R	HTB-48M-R		X
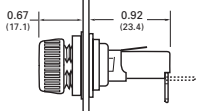	0.3 (8)	HTB-62I-R	HTB-64I-R	HTB-66I-R	HTB-68I-R	X	
		HTB-62M-R	HTB-64M-R	HTB-66M-R	HTB-68M-R		X
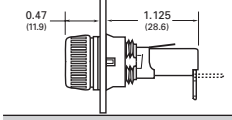	0.125 (3)	HTB-82I-R	HTB-84I-R	HTB-86I-R	HTB-88I-R	X	
		HTB-82M-R	HTB-84M-R	HTB-86M-R	HTB-88M-R		X
Screwdriver-type carrier — common length 1.75 (45)							
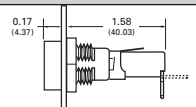	0.3 (8)	HTB-32I-R	HTB-34I-R	HTB-36I-R	HTB-38I-R	X	
		HTB-32M-R	HTB-34M-R	HTB-36M-R	HTB-38M-R		X
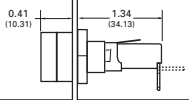	0.125 (3)	HTB-52I-R	HTB-54I-R	HTB-56I-R	HTB-58I-R	X	
		HTB-52M-R	HTB-54M-R	HTB-56M-R	HTB-58M-R		X
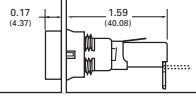	0.125 (3)	HTB-92I-R	HTB-94I-R	HTB-96I-R	HTB-98I-R	X	
		HTB-92M-R	HTB-94M-R	HTB-96M-R	HTB-98M-R		X

* Fuse carriers may be ordered separately. Specify "FT" for knob-type or "ST" for screwdriver type, followed by "-I" for 1/4" fuses and "-M" for 5mm fuses.

Data sheet no. 2119

HJL panel mount neon lamp indicating holder for 1/4" x 1" fuses

Ratings

- Volts 250 V
- Amps 15 A

Catalog no.*	Volts	Lamp color	Knob type
HJL	90 to 250	Clear	Octagonal

* Use with AGX, MKB, TCP70 and TDC fuses, for panels up to 1/8" thick.

Dimensions — in (mm)

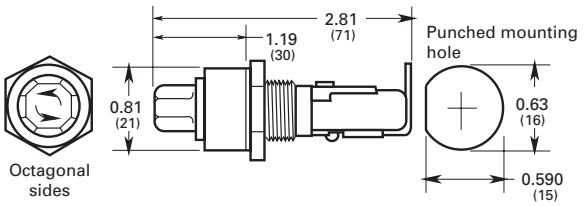

Data sheet no. 2121

HK panel mount neon and incandescent lamp indicating holders for 1/4" x 1" fuses

Ratings

- Volts 250 V
- Amps
  - 15 A (HKL, HKL-X)
  - 20 A (HKR, HKT, HKU, HKX)

Agency information

- UL Recognized, Guide IZLT2, File E14853), CSA Certified Class 6225-01, File 47235, CE

Catalog no.	Lamp volts	Knob color/type
HKL*	90-250	Clear/octagonal
HKL-X*	90-250	Clear/flat side
HKR**	22-30	Amber/octagonal
HKT**	13-22	Amber/octagonal
HKU**	4-6	Red/octagonal
HKX**	22-33	Amber/flat side

* Neon lamp UL Recognized and CSA Certified.
**Incandescent lamp.

Dimensions — in (mm)

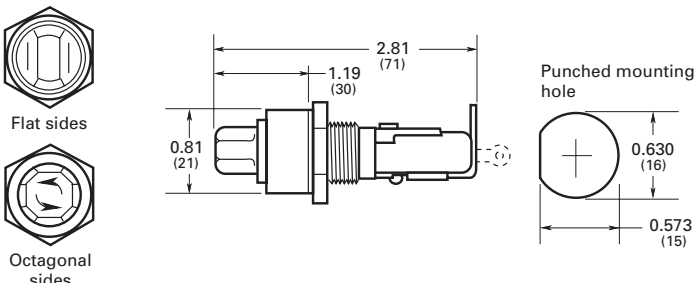

Data sheet no. 2105

HKP panel mount holders for 1/4" x 1-1/4" fuses

Vibration resistant bayonet-type knob holders for panels up to 5/16" thick.

Ratings

RoHS 2011/65/EU

- Volts 250 V
- Amps up to 30 A*

* See data sheet 2106 for ratings by specific holder.

Agency information

- UL Recognized Guide IZLT2, File E14853, CSA Certified, Class 6225-01, File 47235, CE (HKP, HKP-L, HKP-W, HKP-OO), RoHS compliant

Catalog no.	Description
HKP-R	Standard fuse holder
HKP-L-R	HKP with 2250 V stand-off barrier
HKP-W-R	HKP with drip-proof knob
HKP-BBHH-R	HKP with 1/4" quick-connects, nut and washer assembled.
HKP-HH-R	HKP with 1/4" quick-connect.
HKP-LW-HH-R	HKP with drip-proof knob, 2250 V stand-off barrier and 1/4" quick-connects.
HKP-OO-R	HKP with snap-lock

Replacement parts

Catalog no.	Description
9435-1/2	Cap
BK/1A4287	Plastic nut (100 pieces minimum)
BK/1A4806-2	Metal nut (100 pieces minimum)
9732	Washer

Dimensions — in (mm)

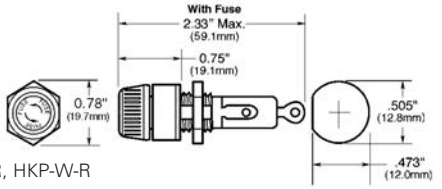

HKP-R, HKP-L-R, HKP-W-R

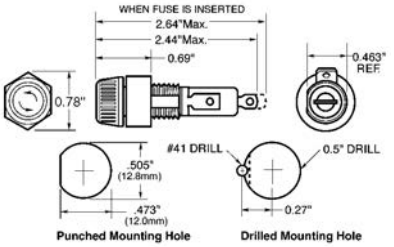

HKP-BBHH-R, HKP-HH-R, HKP-LW-HH-R

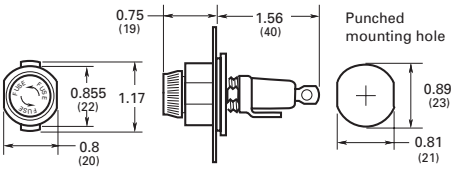

HKP-OO-R

Data sheet no. 2106

HLD panel mount holders for 1/4" x 1-1/4" pin indicating fuses

Ratings

- Volts 250 V
- Amps 15 A

Agency information

- UL Recognized, Guide IZLT2, File E14853, CE

Catalog no.*	Terminals
HLD	Solder terminals
HLD-HH	1/4" quick-connect terminals

* Use with GBA or GLD fuses.

Dimensions — in (mm)

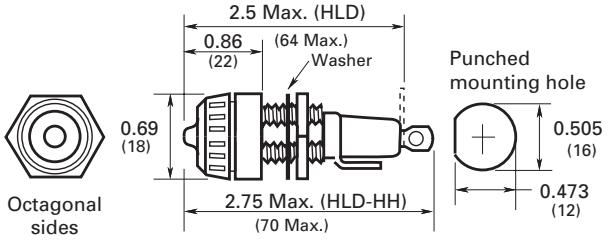

Data sheet no. 2120

HPC-D flange panel mount, solder terminal

10 AWG max holder with screw-type knob for 13/32" x 1-1/2" fuses. Supplied with O-ring and panel gasket

Ratings

- 600 V, 30 A*

* 20 A max when used with quick-connect terminals.

Agency information

- UL Recognized, Guide IZLT2, File E14853, CE

Flammability rating: UL 94HB

Catalog no.	Description
HPC-D	Flange mount in panels up to 1/4" thick.
BK/9987SA	Replacement knob, bulk only, 50 pieces

Dimensions — in (mm)

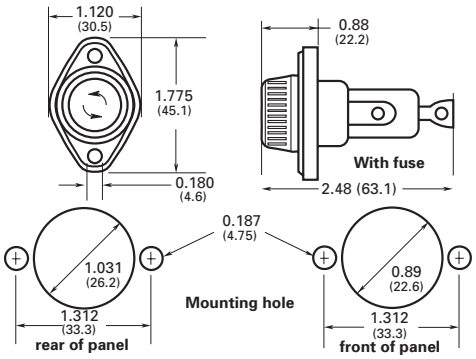

Data sheet no. 2109

HPF panel mount holders with screw-type knobs for 13/32" x 1-5/16" to 1-1/2" fuses

Ratings*

- Volts up to 600 V
- Amps up to 30 A

* See catalog numbers for ratings by specific holder.

Agency information

- UL Recognized, Guide IZLT2, File E14853; CSA Certified, Class 6225-01, File 47235, CE

Flammability rating: UL 94HB

Terminals

- Combination 1/4" quick-connect/solder** terminals

**Solder terminal 10 AWG wire max.

Catalog no.	Amps	Volts (AC)	Fuse/description/length
HPF	30[2]	600	1-1/2" (38mm)
HPF-C	30[3]	600[3]	Clear knob 1-1/2" (38mm)
HPF-L	5	600	BBS, 1-3/8" fuses.
HPF-EE	15	600	SC Class G up to 15 A, 1-5/16"
HPF-JJ	20	600	SC Class G 20 A, 1-13/32"
HPF-FF[1]	30[2]	480	SC Class G 25 and 30 A, 1-5/8"
HPF-RR	30[2]	600	FNQ-R, KTK-R, LP-CC, Class CC
HPF-WT	30[2]	600	Splash-proof knob. 1-1/2" (38mm)

1 Not CSA Certified.
2 20 A max when used with quick-connect terminals.
3 HPF-C ratings for CSA: 15 A, 250 V.

Dimensions — in (mm)

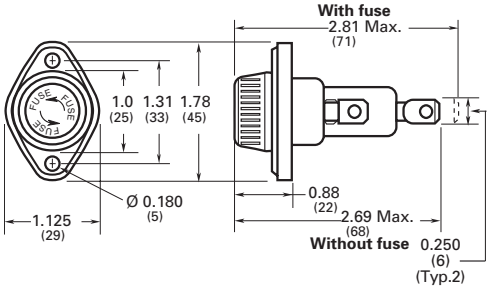

Data sheet no. 2114

HPD and HPG panel mount bayonet-type knob holders for 13/32" x 1-1/2" fuses

Ratings

- Volts 600 V
- Amps
  - 30 A
  - 15 A (Class G only)

HPD

HPG, HPG-EE

Agency information

- UL Recognized, Guide IZLT2, File E14853, CE

Flammability ratings

- Body UL 94V0
- Knob UL 94HB

Catalog no.	Amps	Volts (AC)	Fuse/description/length
HPD*	30[1]	600	1-1/2" (38mm)
HPG**			
HPG-EE**	15		SC Class G up to 15 A, 1-5/16"

* HPD has combination 1/4" quick-connect/solder terminal on loadside (side) terminal only. Lineside (rear) terminal is 3/16" shorter than and is solder only.
**HPG and HPG-EE has combination 1/4" quick-connect/solder terminals on both side (load) and rear (line) terminals.
1 20 A max when used with quick-connect terminals.

Dimensions — in (mm)

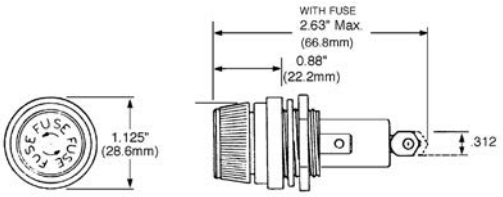

HPD

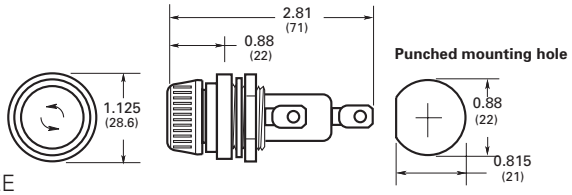

HPG, HPG-EE

HPM panel mount holders with screw-type knob for 13/32" x 1-1/2" fuses.

Ratings

Volts 600 V

Amps 30 A*

* 20 A max when used with quick-connect terminals.

Agency information

- UL Recognized, Guide IZLT2, File E14853; CSA Certified, Class 6225-01, File 47235, CE

Flammability rating: UL 94HB

Catalog no.	Description
HPM	1/4" quick-connect/solder
HPM-D	Splash-resistant knob**
BK/9789-Y2	Replacement knob, bulk only, 50 pieces

**HPM-D has 1/4" quick-connect/solder terminal on rear (load) terminal only. The side (line) terminal is 1/4" quick-connect only.

Nut torque:

- 30 lb-in.

Dimensions — in (mm)

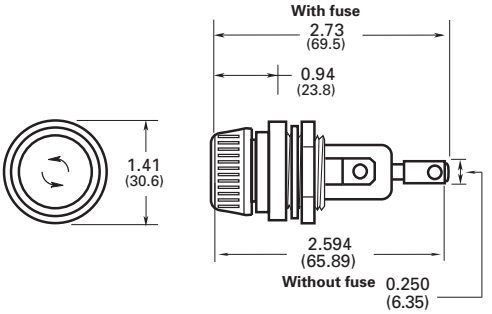

HPS panel mount bayonet-type knob holders for 13/32" x 1-5/16" to 1-1/2" fuses

Ratings*

- Volts up to 600 V
- Amps up to 30 A

* See catalog numbers for ratings by specific holder.

Agency information

- UL Recognized, Guide IZLT2, File E14853; CSA Certified, Class 6225-01, File 47235, CE

Flammability rating: UL 94HB

Terminals

- Combination 1/4" quick-connect/solder terminals.

Catalog no.	Amps	Volts (AC)	Fuse/description/length
HPS	30[1 2]	600	1-1/2" (38mm)
HPS-L	5	600	BBS, 1-3/8"
HPS-EE*	15	600	SC Class G up to 15 A , 1-5/16"
HPS-JJ*	20	600	SC Class G 20 A, 1-13/32"
HPS-F-EE†	15	600	Sleeve on body, leaded for 1-5/16" fuses
HPS-FF*†	30[1]	480	SC Class G 25 and 30 A, 1-5/8"
HPS-RR*†	30[1]	600	FNQ-R KTK-R, LP-CC Class CC

* -EE, -JJ, -FF and -RR suffix versions are UL Recognized for applications requiring branch circuit protection.
† Not CSA Certified.
1 20 A max when used with quick-connect terminals.
2 HPS rated at 250 V for CSA.

Dimensions — in (mm)

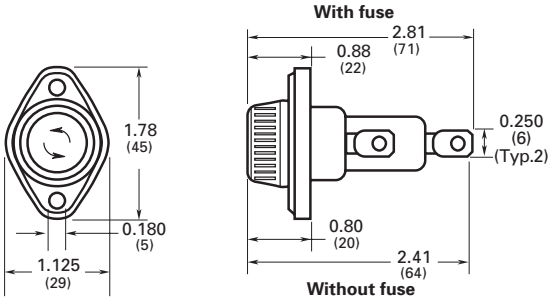

HPS2 panel mount, 1/4" quick-connect/solder terminal (10 AWG max) holder with screw-type knob for 13/32" x 1-1/2" fuses. Supplied with O-ring and panel gasket

For fuse size 13/32" x 1-1/2", meeting UL 1598 requirement that both poles be removed simultaneously.

Ratings

Volts 600 V

Amps 30 A*

* 20 A max when used with quick-connect terminals.

Agency information

- UL 4248 Recognized, Guide IZLT2, File E14853, CSA certified Class 6225-01, File 47235

Flammability rating: UL 94V0

Terminals: 1/4″ quick-connect/solder.

Catalog no.	Description
HPS2	Standard 10-in carton
BK/HPS2	Bulk 100-in carton

Dimensions — in (mm)

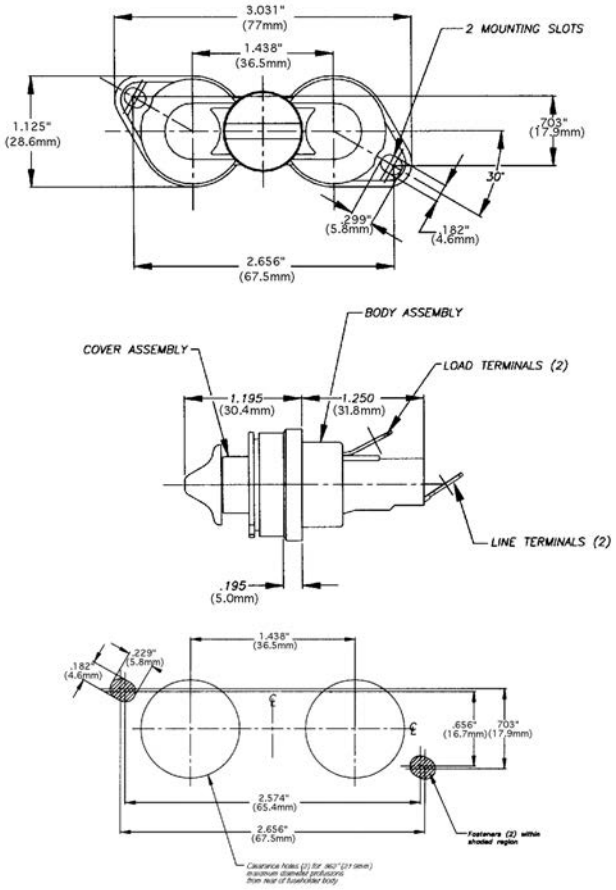

Fuse blocks and holders

HHT in-line fuse holder for 5x15mm to 20mm fuses

The HHT features a black thermoplastic body with brass contacts and 13 inch red AWG 16 leads.

Ratings

- Volts
  - 250 Vac
  - 32 Vdc
- Amps
  - 5 A (5x15mm fuses)
  - 10 A (5x20mm fuses)

Catalog no.	Fuse size (mm)
HHT (100-in)	5x15 and 5x20
BK/HHT (1000-in)	

Dimensions — in

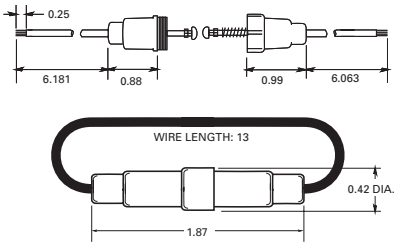

HFA in-line water-resistant holders for 1/4" x 1-1/4" fuses

The HFA is a waterproof, crimp or quick-connect terminal holder for exposed locations made of high temperature, flame retardant phenolic material meeting UL 94 HB. Recommended crimp tools include Thomas & Betts WT-112M or ERG-2002 and Channelock No. 909.

Ratings

- Volts 250 V
- Amps 20 A max.

Agency information

- UL Recognized, Guide IZLT2, File E14853 using AWG 12 copper conductors

Catalog no.	Terminals/AWG
HFA (10-in)	Crimp/12-16
HFA-R (10-in, RoHS compliant)	
BK/HFA-R (20-in, RoHS compliant)	
HFA-HH* (10-in)	1/4" quick-connect
HFA-HH-R* (10-in, RoHS compliant	
BK/HFA-HH-R* (20-in, RoHS compliant	

* Not UL Recognized.

Dimensions — in

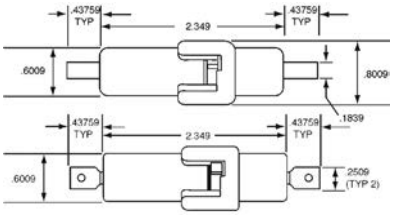

Data sheet no. 2138

Data sheet no. 2115

HFB and HFB-10 in-line holders for 1/4" x 7/8" to 1-1/4" fuses

Water-resistant in-line fuse holder for 1/4" x 1-1/4" fuses made of a thermoplastic rubber body with tin-plated, copper contacts.

Ratings

- Volts 32 V
- Amps 30 A max.

Catalog no.	Description
HFB-R*	Standard pack (10-in)
BK/HFB-R*	Bulk pack (100-in)
HFB-10-R**	Standard pack (10-in)
BK/1A2294	HFB replacement contact clip
1A2294-01	HFB-10** replacement contact clip

* HFB-R accepts #12 to #18 wire leads (not provided). See data sheet 2102 for recommended crimp tools.
**HFB-10-R accepts #10 wire leads (not provided). See data sheet 2102 for recommended crimp tools.

Features

- Simple assembly with one-piece thermoplastic (important information molded into body)
- High visibility yellow color for easy identification in dark or hard-to-access locations
- Ideal for shock and vibration environments; withstands many organic solvents; temperature range -40°C to +150°C

Typical applications

- Supplemental, low voltage, low amperage control circuits

Dimensions — in (mm)

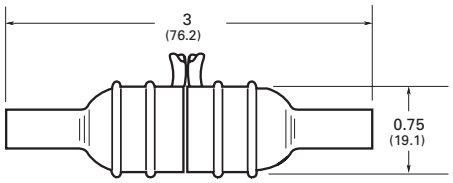

Data sheet no. 2102

HHB universal in-line holders for 1/4" x 7/8", 1" and 1-1/4" fuses

Universal in-line fuse holder for 1/4" diameter fuses in lengths from 7/8" to 1-1/4" made of a nylon body with tin-plated, copper contacts.

Ratings

- Volts 32 V
- Amps 30 A max.

Catalog no.	Description
Holder without leads*	
HHB-R**	Standard pack (10-in)
BK/HHB-R**	Bulk pack (1000-in)
Holder with pre-attached 14 AWG insulated lead wires	
BK/HHB-Y408	8" yellow leads (1000-in)
BK/HHB-R408**	8" red leads (1000-in)
BK/HHB-B408	8" black leads (1000-in)
BK/HHB-Y419	19" yellow leads (1000-in)
BK/HHB-R419	19" red leads (1000-in)
BK/HHB-B419	19" black leads (1000-in)

* Accepts #12 to #16 wire leads (not provided with basic fuse holder). See data sheet 2103 for recommended crimp tools.
**RoHS compliant.

Flammability rating: UL 94V2

Pull force

- 5 lbs minimum to separate fuse holder housing with fuse installed

Features

- Universal application for 1/4" x 7/8", 1" and 1-1/4" fuses

Typical applications

- Supplemental, low voltage, low amperage control circuits

Dimensions — in (mm)

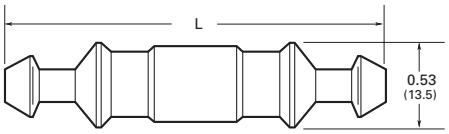

Fuse length	Fuse	Max. holder length "L"
7/8"	AWG	2.10
1"	AGX	2.25
1-1/4"	ABC, AGC, GBB, MDA, MDL, MDQ	2.42

Data sheet no. 2103

HM, HR and HH in-line holders

HM and HR in-line fuse holders feature 8 and 19 inch 14 AWG length leads with a size-rejecting SFE fuse. Also accommodates various length 1/4" diameter fuses from 5/8" to 1-1/4".

Ratings

- Volts 32 V
- Amps 20 A max.

Catalog no.	Included SFE fuse	Lead length (in)	Fuse length (in)
HMJ*	SFE-20	8	1-1/4
HMI	SFE-14		1-1/16
HMH	SFE-9		7/8
HME	SFE-7-1/2		7/8
HMG	SFE-6		3/4
HMF	SFE-4		5/8
HRJ**	SFE-20	19	1-1/4
HRI	SFE-14		1-1/16
HRH	SFE-9		7/8
HRE	SFE-7-1/2		7/8
HRG	SFE-6		3/4
HRF	SFE-4		5/8

* Also available as in-line fuse holder only with lead wire contacts, HMJ-LESS-fuse.
**Also available as in-line fuse holder only with lead wire contacts, HRJ-LESS-fuse.

Catalog no.	Fuse length (in)	Holder description	AWG wire range	Max amps
HHJ-A	1-1/4	No wire or fuse included	18-22	10
HHJ-B			12-16	30
HHI-A	1-1/16		18-22	10
HHI-B			12-16	30

Replacement contacts

Contact catalog no.	For holder catalog no.
9838	HHJ-A and HHI-A
9841	HHJ-B and HHI-B

Features

- Universal application for SFE and various length 1/4" diameter fuses.
- 14 AWG lead wires simplify electrical connection.

Typical applications

- Supplemental, low voltage, low amperage control circuits

Dimensions — in (mm)

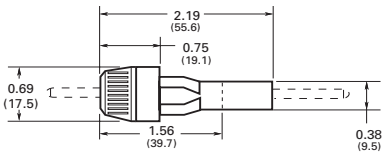

Data sheet no. 2122

HRK Universal in-line holder for 1/4" x 7/8" to 1-1/4" fuses

RoHS 2011/65/EU

Universal in-line fuse holder with 8" (203mm) 14 AWG lead wires for 1/4" diameter fuses in lengths from 7/8" to 1-1/4".

Ratings

- Volts 32 V
- Amps 15 A max.

Catalog no.	Accepts fuse length	Fuse
HRK-R*	7/8"	AWG
	1"	AGX
	1-1/4"	ABC, AGC, GBB, MDA, MDL, MDQ

* Three springs furnished with fuse holder to accommodate different length 1/4" fuses.

Features

- Universal application for 1/4" x 7/8", 1" and 1-1/4" fuses
- 14 AWG lead wires simplify electrical connection.
- RoHS compliant

Typical applications

- Supplemental, low voltage, low amperage control circuits

Dimensions — in (mm)

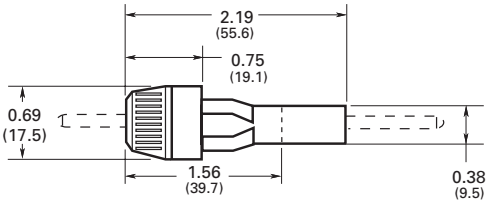

Data sheet no. 2111

HEC, HEG, HEH and HEJ† single-pole Class G fuse non-breakaway in-line holders

Class G size-rejecting non-breakaway submersible, single-pole in-line fuse holders available with many terminal options to meet application needs. Optional insulating boots provide additional protection from dust and moisture ingress (order separately). The HEC is also available in a breakaway version.

† HEJ holders are not RoHS compliant.

RoHS 2011/65/EU

Ratings*

Volts up to 600 V

Amps up to 60 A

SCCR 200 kA RMS Sym.

* Dependant upon fuse and conductor rating.

Insulating boots

Insulating boots are not included. Two insulating boots must be ordered separately, if required, for each holder ordered. When insulating boots are utilized, extra heat retention requires that fuses are sized at a minimum of 200 percent of the RMS load current.

To order insulating boots for Class G holders, use these catalog numbers.

Catalog no.	Description
2A0660	Single conductor
2A0661	Dual conductor

Recommended crimping tools

This list is not intended to exclude the use of other crimping tools that can provide similar crimps or indents.

Terminal code	T & B P/N (Die)	Terminal code	T & B P/N (Die)
A	WT-111M (C)	D	TBM5 (Brown)
	Sta-Kon ERG4002 (C)		TBM8 (Brown)
B	WT-115A (D)		WT-115A (F)
C	TBM5 (Grey)	Z	WT-111M (A)
	WT-115A (E)		Sta-Kon ERG4002 (A)
N, P, Q, R, T	TBM8 (Orange)		

HET neutral

The HET holder is a single-pole in-line holder with a permanent, solid neutral for use along with the Class G in-line holders to provide a means of conductor continuity. The HET holder is identified by a white, plastic coupling nut. Available HET holder counterparts to their Class G holder equivalents are listed in the following catalog number tables. See data sheet no. 2125 for details on the HET holder.

HEG

- 600 V
- 15 A

HEH

- 600 V
- 20 A

HEC

- 480 V
- 25-30 A

HEJ

- 480 V
- 35-60 A

HEC breakaway Class G fuse in-line holder

The HEC breakaway holder includes insulating boots.

Amps	Catalog no.	Line and load terminal	AWG
25-30	HEC-RW-RLB-R	Al crimp	1-2 str.

Non-breakaway catalog number system

HE_ - A A

Amps	Catalog symbol	Loadside terminal	Lineside terminal	Loadside terminal		Lineside terminal		HET neutral equivalent
				Terminal type	AWG Wire range*	Terminal type	AWG wire range*	
15	HEG	A	A	Cu crimp	8-16; (2) 12-16	Cu crimp	8-16; (2) 12-16	HET-AA
20	HEH	A	A	Cu crimp	8-16; (2) 12-16	Cu crimp	8-16; (2) 12-16	HET-AA
			D	Cu crimp	8-16; (2) 12-16	Cu crimp	2 str; (2) 6	—
25-30	HEC	A	A	Cu crimp	8-16; (2) 12-16	Cu crimp	8-16; (2) 12-16	HET-AA
35-60	HEJ	A	A	Cu crimp	8-16; (2) 12-16	Cu crimp	8-16; (2) 12-16	HET-AA
			B	Cu crimp	8-16; (2) 12-16	Cu crimp	6; (2) 10	HET-AB
		B	B	Cu crimp	6; (2) 10	Cu crimp	6; (2) 10	HET-BB
		C	C	Cu crimp	4 str; (2) 8	Cu crimp	4 str; (2) 8	—
		D	D	Cu crimp	2 str; (2) 6	Cu crimp	2 str; (2) 6	—
		J	J	Cu setscrew	3-12	Cu setscrew	3-12	HET-JJ
			K	Cu setscrew	3-12	Cu dual setscrew	2-12†	HET-JK
		L	L / LB††	Al setscrew	2-12	Al setscrew	2-12	—
		P	P	Al crimp	4 sol; 6 str	Al crimp	4 sol; 6 str	—
		Q	Q	Al crimp	2 sol; 3-4 str	Al crimp	2 sol; 3-4 str	—
		W	W	Cu solid	-	Cu solid	-	—

* Solid/stranded conductors unless otherwise noted.
† Not dual wire rated. One wire per opening.
††Same as catalog number as HEJ-LL, but packaged with two 2A0660 single conductor insulating boots.

To order: specify catalog symbol and the loadside terminal code. Then select a lineside terminal code that is available with the loadside terminal. Example: HEJ-BB defines a non-breakaway holder with a loadside copper crimp terminal for a single #6 or two #10 wires with a lineside copper crimp terminal for a single #6 or two #10 wires.

Data sheet no. 2123 (HEJ), 2124 (HEC, HEG, HEH)

HEB single-pole breakaway and non-breakaway in-line holders for 13/32" x 1-1/2" supplemental fuses

Breakaway and non-breakaway submersible, single-pole in-line fuse holders available with many terminal options to meet application needs. Breakaway versions come with insulating boots to provide submersibility per UL IP67. Non-breakaway versions require ordering optional insulating boots for submersibility.

Ratings

Volts 600 V

Amps up to 30 A limited by conductor size

SCCR 200 kA RMS Sym.*

* Dependant upon fuse interrupting rating.

Agency information

UL Recognized, Guide IZLT2, File E14853, CSA Certified, Class 622501, File 47235, CE, RoHS compliant**

**See data sheet 2127 for exceptions.

Insulating boots

Two insulating boots come standard with the breakaway holder configurations. Insulating boots are not included as standard with non-breakaway holders. Two insulating boots must be ordered separately, if required, for each non-breakaway holder ordered. When insulating boots are utilized, extra heat retention requires that fuses are sized at a minimum of 200 percent of the RMS load current.

To order insulating boots for a non-breakaway HEB holder, use these catalog numbers.

Catalog no.	Description
2A0660	Single conductor
2A0661	Dual conductor

Recommended crimping tools

This list is not intended to exclude the use of other crimping tools that can provide similar crimps or indents.

Terminal code	T & B P/N (Die)	Terminal code	T & B P/N (Die)
A	WT-111M (C)	D	TBM5 (Brown)
	Sta-Kon ERG4002 (C)		TBM8 (Brown)
B	WT-115A (D)		WT-115A (F)
C	TBM5 (Grey)	Z	WT-111M (A)
	WT-115A (E)		Sta-Kon ERG4002 (A)
N, P, Q, R, T	TBM8 (Orange)		

HET neutral

The HET holder is a single-pole in-line holder with a permanent, solid neutral for use along with the HEB holder to provide a means of conductor continuity. The HET holder is identified by a white, plastic coupling nut. Available HET holder counterparts to their HEB equivalents are listed in the following catalog number tables. See data sheet no. 2125 for details on the HET holder.

Breakaway catalog number system

HEB - A W - RYC

Catalog symbol	Loadside terminal	Lineside terminal	Agency Information: UL	Agency Information: CSA	Loadside terminal: Terminal type	Loadside terminal: AWG wire range*	Lineside terminal: Terminal type	Lineside terminal: AWG wire range*	HET neutral equivalent
HEB	A	RLC-A	X	X	Cu crimp	8-16; (2) 12-16 Str/Sol	Cu crimp	8-16; (2) 12-16 Str/Sol	HET-AW-RLC-A
		RLC-B	X	X	Cu crimp	8-16; (2) 12-16 Str/Sol	Cu crimp	6; (2) 10	HET-AW-RLC-B
		RLC-C	X	X	Cu crimp	8-16; (2) 12-16 Str/Sol	Cu crimp	4; (2) 8	HET-AW-RLC-C
		RLC-J	X	X	Cu crimp	8-16; (2) 12-16 Str/Sol	Cu setscrew	3-12 Str; 10-12 Sol	HET-AW-RLC-J
		RYC	X	X	Cu crimp	8-16; (2) 12-16 Str/Sol	Cu dual setscrew	2-12† Str; 10-12 Sol†	HET-AW-RYC
		RLA	—	—	Cu crimp	8-16; (2) 12-16 Str/Sol	Al setscrew	2-12	—
		RYA	—	—	Cu crimp	8-16; (2) 12-16 Str/Sol	Al dual setscrew	2-12†	—
	B	RLC-A	X	X	Cu crimp	6; (2) 10	Cu crimp	8-16; (2) 12-16	—
		RLC-B	X	X	Cu crimp	6; (2) 10	Cu crimp	6; (2) 10	HET-BW-RLC-B
		RYC	X	X	Cu crimp	6; (2) 10	Cu dual setscrew	2-12† Str; 10-12 Sol†	—
	J	RLC-J	X	X	Cu setscrew	3-12 Str; 10-12 Sol	Cu setscrew	3-12 Str; 10-12 Sol	HET-JW-RLC-J
		RYC	X	X	Cu setscrew	3-12 Str; 10-12 Sol	Cu dual setscrew	2-12† Str; 10-12 Sol†	HET-JW-RYC
	K	RLC-J	X	—	Cu dual setscrew	2-12 Str†; 10-12 Sol†	Cu setscrew	3-12 Str; 10-12 Sol	—
		RYC	X	—	Cu dual setscrew	2-12 Str†; 10-12 Sol†	Cu dual setscrew	2-12† Str; 10-12 Sol†	—
	L	RLA	—	—	Al setscrew	2-12	Al setscrew	2-12	—
		RLC-J	—	—	Al setscrew	2-12	Cu setscrew	3-12	—
		RYA	—	—	Al setscrew	2-12	Al dual setscrew	2-12†	—

* Stranded conductors unless otherwise noted.
† Not dual wire rated. One wire per opening.

To order: specify catalog symbol HEB and the loadside terminal code plus the letter "W." Then select a lineside terminal code that is available with the loadside terminal. Example: HEB-BW-RCL-B defines a breakaway holder with a loadside copper crimp terminal for a single #6 or two #10 wires with a lineside copper crimp terminal for a single #6 or two #10 wires.

Data sheet no. 2127

Non-breakaway catalog number system

HEB - A A

Catalog symbol	Loadside terminal	Lineside terminal	Agency information: UL	Agency information: CSA	Loadside terminal: Terminal type	Loadside terminal: AWG Wire range*	Lineside terminal: Terminal type	Lineside terminal: AWG wire range*	HET neutral equivalent
HEB	A	A	X	X	Cu crimp	8-16; (2) 12-16 Str/Sol	Cu crimp	8-16; (2) 12-16 Str/Sol	HET-AA
		B	X	X	Cu crimp	8-16; (2) 12-16 Str/Sol	Cu crimp	6; (2) 10	HET-AB
		C††	X	X	Cu crimp	8-16; (2) 12-16 Str/Sol	Cu crimp	4; (2) 8	—
		D††	X	X	Cu crimp	8-16; (2) 12-16 Str/Sol	Cu crimp	2; (2) 6	—
		J	X	X	Cu crimp	8-16; (2) 12-16 Str/Sol	Cu setscrew	3-12 Str; 10-12 Sol	—
		K	X	X	Cu crimp	8-16; (2) 12-16 Str/Sol	Cu dual setscrew	2-12† Str; 10-12 Sol†	—
		R	—	—	Cu crimp	8-16; (2) 12-16 Str/Sol	Al crimp	1-2	—
		L	—	—	Cu crimp	8-16; (2) 12-16 Str/Sol	Al setscrew	2-12	—
		W	—	—	Cu crimp	8-16; (2) 12-16 Str/Sol	Cu solid	—	HET-AW
		Y	—	—	Cu crimp	8-16; (2) 12-16 Str/Sol	Al dual setscrew	2-12†	—
	B	A	X	X	Cu crimp	6; (2) 10	Cu crimp	8-16; (2) 12-16 Str/Sol	—
		B	X	X	Cu crimp	6; (2) 10	Cu crimp	6; (2) 10	HET-BB
		C	X	X	Cu crimp	6; (2) 10	Cu crimp	4; (2) 8	—
		D††	X	X	Cu crimp	6; (2) 10	Cu crimp	2; (2) 6	—
		W	—	—	Cu crimp	6; (2) 10	Cu solid	—	—
	C	C††	X	X	Cu crimp	4; (2) 8	Cu crimp	4; (2) 8	—
	D	D	X	X	Cu crimp	2; (2) 6	Cu crimp	2; (2) 6	—
	Z	A	—	—	Cu crimp	18-20	Cu crimp	8-16; (2) 12-16 Str/Sol	—
	J	J	X	—	Cu setscrew	3-12 Str; 10-12 Sol	Cu setscrew	3-12 Str; 10-12 Sol	HET-JJ
		K	X	—	Cu setscrew	3-12 Str; 10-12 Sol	Cu dual setscrew	2-12 Str†; 10-12 Sol†	HET-JK
		L	—	—	Cu setscrew	3-12 Str; 10-12 Sol	Al setscrew	2-12	—
		W	—	—	Cu setscrew	3-12 Str; 10-12 Sol	Cu solid	—	—
		Y	—	—	Cu setscrew	3-12 Str; 10-12 Sol	Al dual setscrew	2-12†	—
	L	L	—	—	Al setscrew	2-12	Al setscrew	2-12	—
	N	N	—	—	Al crimp	8 Str ;6 Sol	Al crimp	8 Str; 6 Sol	—
	P	P	—	X	Al crimp	6 Str; 4 Sol	Al crimp	6 Str; 4 Sol	—
	Q	Q	—	X	Al crimp	3-4 Str; 2 Sol	Al crimp	3-4 Str; 2 Sol	—
	R	R	—	X	Al crimp	1-2 Str	Al crimp	1-2	—
	T	T	—	X	Al crimp	1/0 Str	Al crimp	1/0	—
	W	W	—	—	Cu solid	—	Cu solid	—	—

* Stranded conductors unless otherwise noted.
† Not dual wire rated. One wire per opening.

To order: specify catalog symbol HEB and the loadside terminal code. Then select a lineside terminal code that is available with the loadside terminal. Example: HEB-BB defines a non-breakaway holder with a loadside copper crimp terminal for a single #6 or two #10 wires with a lineside copper crimp terminal for a single #6 or two #10 wires.

Data sheet no. 2127

HEZ waterproof single-pole breakaway and non-breakaway Class CC in-line holder

RoHS 2011/65/EU

HEZ submersible, single-pole in-line rejection fuse holders are for UL Class CC fuses. They are available in non-breakaway and breakaway versions with terminal options to meet application needs. Breakaway versions come with insulating boots (for details, see HEB insulating boot information) to provide submersibility per UL IP67. The non-breakaway version requires ordering optional insulating boots for submersibility.

Ratings

- Volts 600 V
- Amps up to 30 A limited by conductor size
- Withstand 200 kA RMS Sym.

Data sheet no. 2130

Agency information

- UL Listed, Guide IZLT, File E14853
- CSA Certified, Class 6225-01, File 47235
- RoHS compliant
- CE

Catalog no.	Type	Terminal	AWG range
HEZ-AA	Non-breakaway	Line/load Cu crimp	8-16 (2) 12-16
HEZ-AW-RLC-A	Breakaway	Line/load Cu crimp	8-16 (2) 12-16
HEZ-AW-RYC		Line Cu crimp	8-16 (2) 12-16
		Load Cu dual setscrew†	2-12

† Not dual wire rated, one wire per opening.

HEX (13/32" x 1-1/2" supplemental) and HEY (Class CC) dual-pole breakaway and non-breakaway in-line holders

Breakaway and non-breakaway submersible, dual-pole in-line fuse holders available with terminal options to meet application needs. Breakaway versions come with insulating boots to provide submersibility per UL IP67. Non-breakaway versions require ordering optional insulating boots for submersibility.

Ratings

Volts 600 V

Amps

- Up to 30 A limited by conductor size (UL)
- Up to 15 A limited by conductor size (CSA)

SCCR

- 200 kA RMS Sym.*

* Dependant upon fuse interrupting rating.

Agency information

- HEX; UL Recognized, Guide IZLT2, File E14853, CSA Certified, Class 6225-01, File 47235, CE
- HEY; UL Listed, Guide IZLT, File E14853, CSA Certified, Class 6225-01, File 47235, CE

Insulating boots

Two insulating boots come standard with the breakaway holder configurations. Insulating boots are not included as standard with non-breakaway holders. Two insulating boots must be ordered separately, if required, for each non-breakaway holder ordered. When insulating boots are utilized, extra heat retention requires that fuses are sized at a minimum of 200 percent of the RMS load current.

To order insulating boots for a non-breakaway HEB holder, use these catalog numbers.

Catalog no.	Description
2A0660	Single conductor
2A0661	Dual conductor

Recommended crimping tools

This list is not intended to exclude the use of other crimping tools that can provide similar crimps or indents.

HEB terminal	T & B P/N (Die)	HEB terminal	T & B P/N (Die)
A	WT-111M (C)	D	TBM5 (Brown)
	Sta-Kon ERG4002 (C)		TBM8 (Brown)
B	WT-115A (D)		WT-115A (F)
C	TBM5 (Grey)	Z	WT-111M (A)
	WT-115A (E)		Sta-Kon ERG4002 (A)
N, P, Q, R, T	TBM8 (Orange)		

HET neutral

The HET holder is a single-pole in-line holder with a permanent, solid neutral for use along with the HEB holder to provide a means of conductor continuity. The HET holder is identified by a white, plastic coupling nut. Available HET holder counterparts to their HEB equivalents are listed in the following catalog number tables. See data sheet no. 2125 for details on the HET holder.

Breakaway catalog number system

HE_ - A W - RYC

Catalog symbol	Loadside terminal	Lineside terminal	Agency Information		Loadside terminal		Lineside terminal		HET neutral equivalent
			UL	CSA	Terminal type	AWG wire range*	Terminal type	AWG wire range*	
13/32" x 1-1/2" supplemental fuse									
HEX	A	DRLC-A	X	X	Cu crimp	8-16; (2) 12-16	Cu crimp	8-16; (2) 12-16	HET-AW_RLC-A
		DRLC-B	X	—	Cu crimp	8-16; (2) 12-16	Cu crimp	6; (2) 10	HET-AW_RLC-B
		DRYC	X	—	Cu crimp	8-16; (2) 12-16	Cu dual setscrew	2-12†	HET-AW_RYC
	J	DRYC	X	—	Cu setscrew	3-12	Cu dual setscrew	2-12†	HET-JW-RYC
	K	DRYC	X	—	Cu dual setscrew	2-12†	Cu dual setscrew	2-12†	—
Class CC rejection fuse									
HEY	A	DRLC-A	X	X	Cu crimp	8-16; (2) 12-16	Cu crimp	8-16; (2) 12-16	HET-AW_RLC-A
		DRLC-B	X	—	Cu crimp	8-16; (2) 12-16	Cu crimp	6; (2) 10	HET-AW_RLC-B
		DRLC-J	X	—	Cu crimp	8-12; (2) 12-16	Cu setscrew	3-12	HET-AW_RLC-J
		DRYC	X	—	Cu crimp	8-16; (2) 12-16	Cu dual setscrew	2-12†	HET-AW_RYC

* Solid/stranded conductors unless otherwise noted.
† Not dual wire rated. One wire per opening.

To order: specify catalog symbol HEX and the loadside terminal code plus the letter "W." Then select a lineside terminal code that is available with the loadside terminal. Example: HEX-AW-DRCL-B defines a breakaway holder with a loadside copper crimp terminal for a single #8-16 or two #12-16 wires with a lineside copper crimp terminal for a single #6 or two #10 wires.

Data sheet no. 2126

Non-breakaway catalog number system

HE_ - A A

Catalog symbol	Loadside terminal	Lineside terminal	Agency information		Loadside terminal		Lineside terminal		HET neutral equivalent
			UL	CSA	Terminal type	AWG Wire range*	Terminal type	AWG wire range*	
13/32" x 1-1/2" supplemental fuse									
HEX	A	A	X	X	Cu crimp	8-16; (2) 12-16	Cu crimp	8-16; (2) 12-16	HET-AA
		B	X	X	Cu crimp	8-16; (2) 12-16	Cu crimp	6; (2) 10	HET-AB
		C	X	X	Cu crimp	8-16; (2) 12-16	Cu crimp	4 str; (2) 8	—
		D	X	X	Cu crimp	8-16; (2) 12-16	Cu crimp	2 str; (2) 6	—
		E	X	X	Cu crimp	8-16; (2) 12-16	Cu crimp	(2) 4	—
	B	B	X	X	Cu crimp	6; (2) 10	Cu crimp	6; (2) 10	HET-BB
	C	C	X	X	Cu crimp	4 str; (2) 8	Cu crimp	4 str; (2) 8	—
	J	J	X	—	Cu setscrew	3-12	Cu setscrew	3-12	HET-JJ
		K	X	—	Cu setscrew	3-12	Cu dual setscrew	2-12†	HET-JK
Class CC rejection fuse									
HEY	A	A	X	X	Cu crimp	8-16; (2) 12-16	Cu crimp	8-16; (2) 12-16	HET-AA
		B	X	X	Cu crimp	8-16; (2) 12-16	Cu crimp	6; (2) 10	HET-AB
		C	X	X	Cu crimp	8-16; (2) 12-16	Cu crimp	4 str; (2) 8	—
		D	X	X	Cu crimp	8-16; (2) 12-16	Cu crimp	2 str; (2) 6	—
		E	X	X	Cu crimp	8-16; (2) 12-16	Cu crimp	(2) 4	—
	B	B	X	X	Cu crimp	6; (2) 10	Cu crimp	6; (2) 10	HET-BB
	J	J	X	—	Cu setscrew	3-12	Cu setscrew	3-12	HET-JJ

* Solid/stranded conductors unless otherwise noted.
† Not dual wire rated. One wire per opening.

To order: specify catalog symbol HE_ and the loadside terminal code. Then select a lineside terminal code that is available with the loadside terminal. Example: HEX-BB defines a non-breakaway holder with a loadside copper crimp terminal for a single #6 or two #10 wires with a lineside copper crimp terminal for a single #6 or two #10 wires.

Data sheet no. 2126

Maximize short-circuit current rating up to 200 kA

with Bussmann series finger-safe power distribution fuse blocks

Contents

Description	Section page
Selecting power distribution blocks	**2**
Power distribution blocks	
PDBFS UL Listed finger-safe, high SCCR blocks	3-5
PDB UL Listed high SCCR open blocks	6-8
160, 162, 163, 164 and 165 UL Recognized open blocks	9-12
Power stud terminal blocks	
162, 163 and 165 UL Recognized blocks	13-14
Power splicer blocks	
160, 162, 163 and 165 UL Recognized blocks	15-16
Power terminal blocks	
11675 250 V screw/quick-connect block	17
11725 600 V screw/quick-connect block	
Barrier and deadfront terminal blocks	
14002 600 V barrier block	17
14004 600 V dead front block	

Simplify your panel design

To save panel space and reduce component count, Bussmann series power distribution fuse blocks combine circuit protection and power distribution into one unit. Available in Class H(K), and R up to 60 amps and Class J up to 400 amps, with up to a high 200 kA withstand rating. See these cost and space saving products in Section 8, *Fuse blocks and holders*.

Selecting SCCR power distribution blocks and terminal blocks

Short-circuit current rated power distribution blocks

Bussmann series power distribution blocks have three distinct styles to match different application needs. There are the PDBFS_ and PDB_ high short-circuit current rated power distribution blocks and the 16_ power terminal blocks. The differences are whether the power distribution blocks are enclosed or not, and whether they are UL 1953 Listed power distribution blocks or UL 1059 Recognized power terminal blocks, which have different minimum spacing requirements. The table on this page will assist you in selecting which block is right for your application.

Why these are important

Per the NEC and OSHA, equipment cannot be installed in an electrical system at a location where the available fault (short-circuit) current is greater than the equipment's SCCR.

Further, equipment SCCRs are required in the 2014 NEC and for UL 508A Listed control panels. Marking the equipment SCCR on control panels (NEC 409.110), industrial machinery electrical panels (NEC 670.3(A)), and HVAC equipment (NEC 440.4(B)) is required by the NEC.

Power distribution and terminal blocks not marked with a component SCCR are typically one of the weakest links in a control panel's equipment SCCR and may limit the equipment SCCR to no more than 10 kA. The PDBFS_ and PDB_ products have the increased spacing required for use in feeder circuits of equipment listed to UL 508A (UL 1059 terminal blocks must be evaluated for proper spacings). Also, for building wiring systems, the PDBFS_ and PDB_ power distribution blocks can be used to meet the 2014 NEC requirements in section 376.56(B) for power distribution blocks in wireways.

Selection table

The table below provides an overview of the three Bussmann series power distribution and terminal blocks mentioned above. For details on the PDB_ blocks, see data sheet number 10537. For the 16_ blocks, see data sheet numbers 10533 (UL Recognized power distribution blocks), 10534 (splicer blocks) and 10535 (stud blocks).

Catalog symbol	UL status	Enclosed	High SCCR*	Spacing ** 1" air, 2" surface	UL 508A panel branch circuit	UL 508A panel feeder circuit	HVAC UL 1995	Wireways NEC 376.56(B) (requires UL 1953)
PDBFS_	UL 1953 Listed power distribution blocks	Yes***	Yes	Yes	Yes	Yes	Yes	Yes
PDB_	UL 1953 Listed power distribution blocks	No†	Yes	Yes	Yes	Yes	Yes	Yes, with optional cover
16_	UL 1059 Recognized terminal blocks	No†	Yes	No††	Yes	No††	Yes	No

* When protected by proper fuse class with maximum ampere rating specified or smaller.
** For details, see PDB and TB minimum spacing requirements for equipment table below.
*** IP20 finger-safe under specific conditions, see data sheet 10536.
† Optional covers are available. Not IP20, but provide a safety benefit.
†† No, except if single pole units installed with proper spacings.

Power distribution and terminal block minimum spacing requirements for equipment

UL standard	Spacing between live parts of opposite polarity		Spacing between live parts and grounded parts or enclosure @ 600 V
	Through air @ 600 V	Over surface @ 600 V	
508A feeder circuits	1"	2"	1"
508A branch circuits	3/8"	1/2"	1/2"
1995 HVAC	3/8"	1/2"	1/2"

Note: Refer to specific UL standards for complete spacing details.

PDBFS UL Listed finger-safe, high SCCR power distribution blocks

These single pole, small footprint, high Short-Circuit Current Rating (SCCR) power distribution blocks provide IP20* finger-safe protection in a modular design that permits dovetailing together the required number of poles and still meet the UL 1953 minimum 1" and 2" spacing required per UL 508A for feeder circuit applications and per NEC for field installations.

With SCCRs up to 200 kA, these blocks help achieve compliance with NEC and OSHA requirements by resolving a common SCCR "weak link" in industrial control panels.

To increase application flexibility, these blocks feature dual-wire rated ports that accept copper or aluminum conductors while retaining a UL Listed status.

RoHS 2011/65/EU

With panel or 35mm DIN-Rail** mounting these blocks are suitable for installation in wireways and industrial control panel feeder and branch circuits.

* See table on page 9-5.
**PDFFS504 panel mount only.

Ratings

- Volts
  - 600 V (UL)
  - 690 V (IEC)
  - 1000 V (self-certified)
- Amps 175 to 760 A
- SCCR Up to 200 kA (see table for circuit protection details)

Conductors†

- Stranded 75°C copper and aluminum
- Higher temperature rated conductors permitted with appropriate derating

† As specified in the catalog number table.

Agency information

- UL 1953 Listed, Guide QPQS, File E256146
- CSA Certified, Class 6228-01, File 47235
- RoHS compliant
- CE

Flammability rating

- UL 94 V0

How to order

- From the catalog number table, select the catalog number that defines the desired lineside/loadside port and conductor characteristics
- Order one block per pole for the application
- Multiple single-pole blocks can be ganged together via the dovetailing feature to form multi-pole configurations

Catalog number example — PDBFS204 is a 1-pole block

Where:

- The catalog symbol "PDBFS" defines the block as a finger-safe design
- The catalog number ending "204" in this example defines this block's lineside and loadside characteristics covering the amp rating, number of ports and wire sizes, etc.
- See the catalog number table for details on the available lineside/loadside characteristics.

Features

- IP20 finger-safe under specified conditions increases safety by isolating energized connections
- Wire-ready captive termination screws cannot be misplaced and are shipped "backed out" to save time on conductor installation
- Sliding DIN-Rail latch provides easy block mounting
- For multiple pole applications, all single-pole units can be gang mounted by using the interlocking dovetail pins that are pre-installed on the side of the blocks
- Elongated panel-mounting holes provide greater flexibility and installation ease when matching up with drilled panel holes

Dual wire port application

- Rated for dual wire port application to increase the possible number of lineside and loadside connections. E.g., PDBFS220 can accept two wires into the lineside port (4 - 14 Cu, 4 - 8 Al) and two wires per port (eight connections total) on the loadside lug (8 - 14 Cu, 8 Al).
- Dual wire applications are only viable when using two wires of the same size, stranding, and insulating and conductor material.
- Ferrule terminal application
- Bussmann series PDBFS power distribution blocks are rated for use with UL Listed ferrules (see catalog number table for details).
- Ferrule applications allow for the use of a broader range of conductor stranding and simulate a more efficient, solid wire connection with the PDBFS terminal port.
- Always use UL Listed ferrules in accordance with the manufacturer's specifications and instructions.

Multi-pole block ganging

Dovetail feature permits easy ganging for multi-pole applications

PDBFS blocks can be ganged for the required number of poles.

To gang two or more blocks for DIN-Rail or panel mounting, place them side-by-side and slide the dovetail pin of one block into the reciprocal slot on the other until fully seated and both blocks are coplanar.

Note: Dissimilar PDBFS blocks can be ganged. E.g., a PDBFS204 can be ganged with a PDBFS220. Ganging with a PDBFS504 (non-DIN Rail mount version) will prevent DIN-Rail mounting.

Line/load port configuration	Current rating (A)	Lineside Wire size (Str/ferrule unless noted)*	Lineside Wires per port	Lineside Torque N•m (lb-in)	Lineside Ports/pole	Loadside Wire size (Str/ferrule unless noted)*	Loadside Wires per port	Loadside Torque N•m (lb-in)	Loadside Ports/pole	Max SCCR (kA)**	Catalog no.
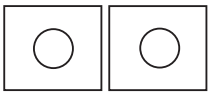	175	2/0 - 1 Cu/Al (Str)	1	12.4 (110)††	1	2/0 - 1 Cu/Al (Str)	1	12.4 (110)††	1	200	PDBFS204
		2 - 3 Cu/Al	1			2 - 3 Cu/Al	1				
		4 - 8 Cu/Al	1			4 - 8 Cu/Al	1				
		10 - 12 Al (Str)	1	4.0 (35)		10 - 12 Al (Str)	1	4.0 (35)			
		10 - 14 Cu	1			10 - 14 Cu	1				
		4 - 8 Cu/Al	2	13.6 (120)		4 - 8 Cu/Al	2	13.6 (120)			
		10 - 14 Cu	2			10 - 14 Cu	2				
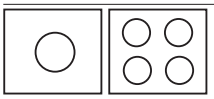	175	2/0 - 1 Cu/Al (Str)	1	13.6 (120)	1	4 - 6 Cu/Al (Str)	1	4.0 (35)	4	200	PDBFS220
		2 - 3 Cu/Al	1			8 Cu	1	2.8 (25)			
		4 - 8 Cu/Al	1-2			8 Al (Str)	1-2				
		10 - 14 Cu	1-2			10 - 14 Cu	1-2	2.3 (20)			
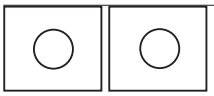	310	350kcmil - 2/0 Cu/Al (Str)	1	31.1 (275)†	1	350kcmil - 2/0 Cu/Al (Str)	1	31.1 (275)†	1	200	PDBFS303
		1/0 Cu/Al (Str)	1-2			1/0 Cu/Al (Str)	1-2				
		1 - 6 Cu/Al	1-2			1 - 6 Cu/Al	1-2				
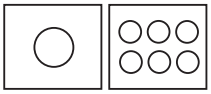	380	500kcmil - 4/0 Cu/Al (Str)	1	56.5 (500)	1	2 - 3 Cu/Al (Str)	1	5.6 (50)	6	200	PDBFS330
						4 Cu/Al	1	5.1 (45)			
		3/0 - 1/0 Cu/Al (Str)	1-2			6 Cu/Al	1-2				
		1 - 6 Cu/Al	1-2			8 Cu/Al	1-2	4.5 (40)			
						10 - 14 Cu	1-2	4.0 (35)			
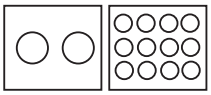	570	300kcmil - 2/0 Cu/Al (Str)	1	31.1 (275)†	2	4 - 6 Cu/Al (Str)	1	4.0 (35)	12	200	PDBFS377
		1/0 Cu/Al (Str)	1-2			8 Cu	1	2.8 (25)			
		1 - 2 Cu/Al	1-2			8 Al (Str)	1-2				
		4 Cu/Al (Str)	1-2			10 - 12 Al (Str)	1	2.3 (20)			
						10 - 14 Cu	1-2				
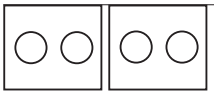	620	350kcmil - 2/0 Cu/Al (Str)	1	31.1 (275)†	2	350kcmil - 2/0 Cu/Al (Str)	1	31.1 (275)†	2	200	PDBFS500
		1/0 Cu/Al (Str)	1-2			1/0 Cu/Al (Str)	1-2				
		1 - 4 Cu/Al	1-2			1 - 4 Cu/Al	1-2				
		6 Cu/Al	2			6 Cu/Al	2				
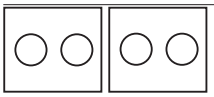	760	500kcmil - 4/0 Cu/Al (Str)	1	56.5 (500)	2	500kcmil - 4/0 Cu/Al (Str)	1	56.5 (500)	2	200	PDBFS504
		3/0 - 1/0 Cu/Al (Str)	1-2			3/0 - 1/0 Cu/Al (Str)	1-2				
		1 - 6 Cu/Al	1-2			1 - 6 Cu/Al	1-2				

* 75°C wire (higher temperature rated wire acceptable with appropriate derating). Using a ferrule on a stranded conductor requires a correctly sized UL Listed ferrule (customer supplied) applied according to the manufacturer's specifications. Ferrule ratings apply to copper wire only.
**See pages 9-4 and 9-5 for the tested upstream overcurrent protective devices necessary for achieving these SCCRs.
† Torque rating for dual wire and ferrule application is 30.5 N•m (270 lb-in).
††Torque rating for ferrule application is 13.6 N•m (120 lb-in).

Upstream fusing for SCCR and minimum enclosure data

This table contains the tested SCCR levels for each PDBFS power distribution block using the specified lineside and loadside conductors and Bussmann series Class J, RK1, RK5 and T fuses. Using these tested SCCR levels also requires the power distribution block be installed in an enclosure with the minimum size indicated for each catalog number.

Catalog no.	Conductors (AWG/kcmil) Lineside	Conductors (AWG/kcmil) Loadside	Fuse class and maximum amps* J — LPJ	RK1 — LPN-RK (250 V) LPS-RK (600 V)	RK5 — FRN-R (250 V), FRS-R (600 V)	T — JJN (300 V), JJS (600 V)	SCCR (kA)	Min. enclosure size (in)
PDBFS204	2/0 - 8	2/0 - 8	200	100	60	200	200	16 x 16 x 6.75
PDBFS220	2/0 - 8	4 - 12	200	100	60	200	200	16 x 16 x 6.75
		4 - 14	175	100	30	175	100	
			200	100	60	200	50	
PDBFS303	350 - 6	350 - 6	400	200	100	400	200	36 x 30 x 12.625
PDBFS330	500 - 6	2 - 6	400	200	100	400	200	24 x 20 x 6.75
		6 - 14	200	100	60	200	50	
			175	100	30	175	100	
PDBFS377	300 - 4	4	600	400	200	600	200	24 x 20 x 6.75
			400	200	100	400	100	
		4 - 14	200	100	60	200	50	
	4	4	600	400	200	600	50	
PDBFS500	350	350	600	400	200	600	200	36 x 30 x 12.625
	350 - 4	350 - 4	600	400	200	600	100	
PDBFS504	500	500	600	600	200	800**	200	36 x 30 x 12.625
	500 - 6	500 - 6	600	400	200	600	100	

Ampacities 75°C per NEC® Table 310.16 and UL 508A Table 28.1.
* Class G 60 A (SC-60) or less or Class CC 30 A (LP-CC-30, FNQ-R-30, KTK-R-30) or less are suitable for all SCCRs in this table.
**Class L 800 A (KRP-C 800_SP) or less fuses suitable for this particular SCCR case.

Data sheet no. 10536

Upstream circuit breakers for SCCR and minimum enclosure data

This table contains the tested SCCR levels for each PDBFS power distribution block using the specified lineside and loadside conductors and Eaton and General Electric circuit breakers. Using these tested SCCR levels also requires the power distribution block be installed in an enclosure with the minimum size indicated for each catalog number.

PDBFS SCCR as rated with Eaton circuit breakers

Catalog no.	Suitable Cu conductors kcmil/AWG Lineside	Suitable Cu conductors kcmil/AWG Loadside	SCCR, RMS Sym. (kA)	Volts max	Overcurrent protection circuit breaker required Type	Overcurrent protection circuit breaker required Max amp	Min. enclosure size (in.)
PDBFS204	2/0 - 8	2/0 - 8	65	480	EGC125, E125C, EGH125, E125H	125	16 x 16 x 6.75
PDBFS330	500 - 3	2 - 8	14	480	LGH400, L400H, LGE400, L400E, LGS400, L400S	400	24 x 20 x 6.75
			25		LGC400, L400C, LGU400, L400U, LGX400, L400X		
PDBFS377	(2) 300 - 2	4	30	480	LGH600, L600H, LGE600, L600E, LGS600, L600S	600	24 x 20 x 6.75
		6	18				
		8	14				
		4	42		LGC600, L600C, LGU600, L600U, LGX600, L600X		
		6	35				
		8	14				

PDBFS SCCR as rated with General Electric circuit breakers

Catalog no.	Suitable Cu conductors kcmil/AWG Lineside	Suitable Cu conductors kcmil/AWG Loadside	SCCR, RMS Sym. (kA)	Volts max	Overcurrent protection circuit breaker required Type	Overcurrent protection circuit breaker required Max amp	Min. enclosure size (in.)
PDBFS204	2/0 - 8	2/0 - 8	65	480	SELA	150	16 x 16 x 6.75
			25		SEHA	150	
PDBFS220	2/0 - 8	4 - 12	65	480	SELA	150	16 x 16 x 6.75
			25		SEHA	150	
PDBFS303	250 - 6	350 - 6	65	480	SFLA	250	24 x 20 x 6.75
		250 - 6	35		SFHA	250	
	3/0 - 6	350 - 6	65		SELA	150	
			25		SEHA	150	
PDBFS330	250 - 6	2 - 12	65	480	SFLA	250	24 x 20 x 6.75
			35		SFHA	250	
	3/0 - 6		65		SELA	150	
			25		SEHA	150	

Specified installation conditions for IP20 finger-safe ratings

This table contains the installed wire and trim lengths, and other conditions the PDBFS power distribution blocks need in order to be compliant with IP20 specifications. IP20 compliance status is indicated in the lineside and loadside wire port and terminal screw opening columns.

Catalog no.	Lineside Installed wire/state	Lineside Wire trim length - in (mm)	Lineside IP20 status Wire port opening	Lineside IP20 status Terminal screw opening	Loadside Installed wire/state	Loadside Wire trim length - in (mm)	Loadside IP20 status Wire port opening	Loadside IP20 status Terminal screw opening
PDBFS204	2/0 - 8	0.85 (22)	Yes	Yes	2/0 - 8	0.97 (25)	Yes	Yes
PDBFS220	2/0 - 8	0.75 (19)	Yes	Yes	4 - 14	Top row 0.55 (14), Bottom row 0.85 (22)	Yes	Yes
					Screws fully opened		N/A	Yes
					No wire in hole		No	N/A
PDBFS303	350kcmil - 2/0	1.35 (34)	Yes	Yes	350kcmil - 2/0	1.25 (32)	Yes	Yes
	1/0 - 6		No	Yes	1/0 - 6		No	Yes
PDBFS330	500 - 250kcmil	1.25 (32)	Yes	Yes	2 - 14	Top row 0.59 (15), Bottom row 1.2 (30)	Yes	Yes
	4/0 - 6		No	Yes	Screws fully opened		N/A	Yes
					No wire in hole		Yes	N/A
PDBFS377	300kcmil - 4/0	Top row 1.15 (29) bottom row 1.4 (36)	Yes	Yes	4 - 14	Top row 0.55 (14), Middle row 1.00 (35), Bottom row 1.22 (31)	Yes	Yes
	3/0 - 4		No	Yes	Screws fully open		N/A	Yes
	Screws fully open		N/A	No	No wire in port		Yes	N/A
	No wire in port		No	N/A				
PDBFS500	350kcmil - 2/0	1.25 (32)	No	Yes	350kcmil - 2/0	1.25 (32)	Yes	Yes
	1/0 - 4		No	Yes	1/0 - 4		No	Yes
	Screws fully opened		N/A	No	Screws fully open		N/A	No
	No wire in port		No	N/A	No wire in port		No	N/A
PDBFS504	500 - 350kcmil	1.25 (32)	Yes	Yes	500 - 350kcmil	1.25 (32)	Yes	Yes
	300 - 6		No	Yes	300 - 6		No	Yes
	Screws fully open		N/A	No	Screws fully opened		N/A	No
	No wire in port		No	N/A	No wire in port		No	N/A

PDB UL Listed high SCCR open power distribution blocks

High Short-Circuit Current Rating (SCCR) power distribution blocks provide up to 200 kA SCCR and help achieve compliance with NEC and OSHA requirements by resolving a common SCCR "weak link" in industrial control panels.

Available in 1-, 2- and 3-pole panel mount versions with popular lineside and loadside port configurations, these blocks are UL Listed with the requisite spacing between uninsulated opposite polarities or ground by meeting the UL 1953 1" through air and 2" over surface spacings required per UL 508A for feeder circuit applications and per NEC for field installations.

To increase application flexibility, these blocks feature dual-wire rated ports that accept copper or aluminum conductors while retaining a UL Listed status.

Optional covers are available to enhance electrical safety.

Ratings

- Volts 600 V
- Amps 175 to 310 A
- SCCR 200 kA (see table for circuit protection details)

Conductors†

- Stranded 75°C copper and aluminum
- Higher temperature rated conductors permitted with appropriate derating

† As specified in the catalog number table.

Agency information

- UL 1953 Listed, Guide QPQS, File E256146
- CSA Certified, Class 6228-01, File 47235
- CE

Flammability rating

- UL 94 V0

How to order

From the catalog number table, select the catalog number that defines the desired lineside/loadside port and conductor characteristics.

Add to the catalog number the suffix that defines the desired pole configuration. Note, you must select from the available number of poles for each catalog number. These appear in the second column of the catalog number tables.

Catalog number example — PDB323-3 is a 3-pole PDB323

Where:

- The prefix "PDB323" defines the block's lineside characteristics (i.e., one conductor port per pole that accepts 350kcmil-6 Cu/Al conductors) and the loadside characteristics (i.e., six (6) conductor ports per pole that each accepts 4-14 Cu or 4-12 Al conductors)
- The suffix "3" in this example defines this as a three-pole block
- See the catalog number table for details on the available lineside/loadside characteristics

Data sheet no. 10537

Features

- High SCCRs up to 200 kA, assist in achieving high SCCR for a control panel per NEC and UL 508A requirements
- In compliance with UL 1953 minimum spacing requirements for industrial control panel feeder and branch circuits
- Optional covers available to reduce the risk of accidental contact with energized components

Dual wire port application

- Rated for dual wire port application to increase the possible number of lineside and loadside connections. E.g., PDB220 can accept two wires into the lineside port (4-14 Cu, 4-8 Al) and two wires per port (eight connections per pole total) on the loadside lug (8-14 Cu, 8 Al).
- Dual wire applications are only viable when using two wires of the same size, stranding, and insulating and conductor material in the same port

Ferrule terminal application

- Bussmann series PDB power distribution blocks are rated for use with UL Listed ferrules (see catalog number table for details)
- Ferrule applications allow for the use of a broader range of conductor stranding and simulate a more efficient, solid wire connection with the PDB terminal port
- Always use UL Listed ferrules in accordance with the manufacturer's specifications and instructions

Optional covers

Electrical safety can be enhanced by installing optional covers.

From the table below, order the cover catalog number that matches the block catalog number. Order the quantity indicated in the "order quantity" column. E.g., the 3-pole block PDB204-3 requires ordering three CPB162-1 covers (one cover for each pole).

Block catalog no.	Poles	Cover catalog no.	Order quantity
PDB204-1	1	CPB162-1	1
PDB204-3	3	CPB162-1	3
PDB220-1	1	CPB162-1	1
PDB220-3	3	CPB162-1	3
PDB280-1	1	CPB162-1	1
PDB280-3	3	CPB162-1	3
PDB323-1	1	CPDB-1	1
PDB323-3	3	CPDB-1	3
PDB370-1	1	CPDB-1	1
PDB370-3	3	CPDB-1	3
PDB371-1	1	CPDB-1	1
PDB371-3	3	CPDB-1	3
PDB321-1	1	CPDB-1*	1
PDB321-2	2	CPDB-2*	1
PDB321-3	3	CPDB-3*	1

* For the PDB321-_ blocks, order one cover for each block (not per pole).

Line/load port configuration	No. of poles	Current rating (A)	Lineside Wire size (Str/ferrule unless noted)*	Lineside Wires per port	Lineside Torque N•m (lb-in)	Lineside Ports/ pole	Loadside Wire size (Str/ferrule unless noted)*	Loadside Wires per port	Loadside Torque N•m (lb-in)	Loadside Ports/ pole	Max SCCR (kA)**	Catalog no.
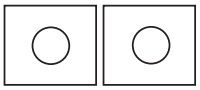	1, 3	175	2/0 - 1 Cu/Al (Str)	1	12.4 (110)††	1	2/0 - 1 Cu/Al (Str)	1	12.4 (110)††	1	200	PDB204-_
			2 - 3 Cu/Al	1			2 - 3 Cu/Al	1				
			4 - 8 Cu/Al	1			4 - 8 Cu/Al	1				
			10 - 12 Al (Str)	1	4.0 (35)		10 - 12 Al (Str)	1	4.0 (35)			
			10 - 14 Cu	1			10 - 14 Cu	1				
			4 - 8 Cu/Al	2	13.6 (120)		4 - 8 Cu/Al	2	13.6 (120)			
			10 - 14 Cu	2			10 - 14 Cu	2				
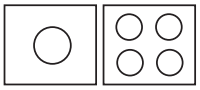	1, 3	175	2/0 - 1 Cu/Al (Str)	1	13.6 (120)	1	4 - 6 Cu/Al (Str)	1	4.0 (35)	4	200	PDB220-_
			2 - 3 Cu/Al	1			8 Cu	1	2.8 (25)			
			4 - 8 Cu/Al	1-2			8 Al (Str)	1-2				
			10 - 14 Cu	1-2			10 - 14 Cu	1-2	2.3 (20)			
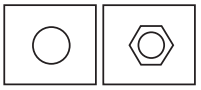	1, 3	175	2/0 - 1 Cu/Al (Str)	1	13.6 (120)	1	1/4-20 x 3/4″ Stud	—	—	1	200	PDB280-_
			2 - 3 Cu/Al	1								
			4 - 8 Cu/Al	1-2								
			10 - 14 Cu	1-2								
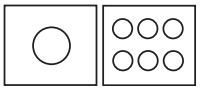	1, 2, 3	175	2/0 - 1 Cu/Al (Str)	1	13.6 (120)	1	4 - 6 Cu/Al (Str)	1	4.0 (35)	6	200	PDB321-_
			2 - 3 Cu/Al	1			8 Al (Str)	1-2				
			4 - 8 Cu/Al	1-2			8 Cu	1	2.8 (25)			
			10 - 12 Al (Str)	1			10 - 12 Al (Str)	1	4.0 (35)			
			10 - 14 Cu	1-2			10 - 14 Cu	1-2	2.3 (20)			
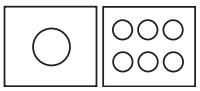	1, 3	310	350kcmil - 2/0 Cu/Al (Str)	1	31.1 (275)†	1	4 - 6 Cu/Al (Str)	1	4.0 (35)	6	200	PDB323-_
							8 Al (Str)	1-2				
			1/0 Cu/Al (Str)	1-2			8 Cu	1	2.8 (25)			
							10 - 12 Al (Str)	1	4.0 (35)			
			1 - 6 Cu/Al	1-2			10 - 12 Cu	1	2.3 (20)			
							10 - 14 Cu	2				
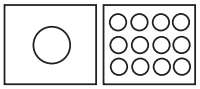	1, 3	310	350kcmil - 2/0 Cu/Al (Str)	1	31.1 (275)†	1	4 - 6 Cu/Al (Str)	1	4.0 (35)	12	200	PDB370-_
			1/0 Cu/Al (Str)	1-2			8 Al (Str)	1-2				
							8 Cu	1	2.8 (25)			
			1 - 6 Cu/Al	1-2			10 - 12 Al (Str)	1	4.0 (35)			
							10 - 14 Cu	1-2	2.3 (20)			
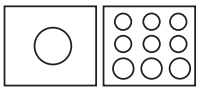	1, 3	310	350kcmil - 2/0 Cu/Al (Str)	1	31.1 (275)†	1	2 - 3 Cu/Al (Str)	1	5.6 (50)	6	200	PDB371-_
							4 - 8 Al (Str)	1				
							6 - 8 Al (Str)	2				
							4 Cu	1	5.1 (45)			
							6 Cu	1-2				
			1/0 Cu/Al (Str)	1-2			8 Cu	1-2	4.5 (40)			
							10 - 12 Cu	1-2	4.0 (35)			
							14 Cu	2				
							1/0 - 3 Cu/Al (Str)	1	5.6 (50)	3		
							4 - 6 Cu/Al	1	5.1 (45)††			
							8 Cu/Al	1	4.5 (40)††			
			1 - 6 Cu/Al	1-2			10 - 12 Cu	1	4.0 (35)††			
							6 - 14 Cu	2	13.6 (120)			
							4 - 6 Al (Str)	2				

* 75°C wire (higher temperature rated wire acceptable with appropriate derating). Using a ferrule on a stranded conductor requires a correctly sized UL Listed ferrule (customer supplied) applied according to the manufacturer's specifications. Ferrule ratings apply to copper wire only.
**See page 9-8 for the tested upstream overcurrent protective devices necessary for achieving these SCCRs.
† Torque rating for dual wire and ferrule application is 30.5 N•m (270 lb-in).
††Torque rating for ferrule application is 13.6 N•m (120 lb-in).

Upstream fusing for SCCR and minimum enclosure data

This table contains the tested SCCR levels for each PDBFS power distribution block using the specified lineside and loadside conductors and Bussmann series Class J, RK1, RK5 and T fuses. Using these tested SCCR levels also requires the power distribution block be installed in an enclosure with the minimum size indicated for each catalog number.

	Conductors (AWG/kcmil)		Fuse class and maximum amps*						
Catalog no.	Lineside	Loadside	G — SC (480 V)	J — LPJ	RK1 — LPN-RK (250 V), LPS-RK (600 V)	RK5 — FRN-R (250 V), FRS-R (600 V)	T — JJN (300 V), JJS (600 V)	SCCR (kA)	Min. enclosure size (in)
PDB204-1, -3	2/0 - 8	2/0 - 8	—	200	100	60	200	200	16 x 16 x 6.75
PDB220-1, -3	2/0 - 8	4 - 12	—	200	100	60	200	200	16 x 16 x 6.75
		4 - 14	60	175	100	30	175	100	
PDB280-1, -3	2/0 - 8	Stud	—	200	100	60	200	200	16 x 16 x 6.75
PDB321-1, -2, -3	2/0 - 8	4 - 12	—	400	200	100	400	200	24 x 20 x 6.75
		4 - 14	60	175	100	30	175	100	
PDB323-1, -3	350 - 4	4 - 8	—	400	200	100	400	200	24 x 20 x 6.75
		4 - 12	60	175	100	30	175	100	
PDB370-1, -3	350 - 4	4 - 8	—	400	200	100	400	200	24 x 20 x 6.75
		4 - 14	60	175	100	30	175	100	
PDB371-1, -3	350 - 4	1/0 - 6	—	400	200	100	400	200	24 x 20 x 6.75
		1/0 - 12	60	175	100	30	175	100	

Ampacities 75°C per NEC Table 310.16 and UL 508A Table 28.1.
* Class CC 30 A (LP-CC-30, FNQ-R-30, KTK-R-30) or less are suitable for all SCCRs in this table.

Upstream circuit breakers for SCCR and minimum enclosure data

This table contains the tested SCCR levels for each PDB power distribution block using the specified lineside and loadside conductors and Eaton circuit breakers. Using these tested SCCR levels also requires the power distribution block be installed in an enclosure with the minimum size indicated for each catalog number.

PDB_ SCCR as rated with Eaton circuit breakers

	Suitable Cu conductors kcmil/AWG				Overcurrent protection circuit breaker required		Min. enclosure size (in.)
Catalog no.	Lineside	Loadside	SCCR, RMS Sym. (kA)	Volts max	Type	Max amp	
PDB220	2/0 - 8	4 - 10	65	480	EGC125, E125C, EGH125, E125H	125	16 x 16 x 6.75
	2/0 - 8	12	22	480	EGC125, E125C, EGE125, E125E, EGS125, E125S, EGH125, E125H	125	
	2/0 - 8	14	14	480	EGC125, E125C, EGB125, E125B, EGE125, E125E, EGS125, E125S, EGH125, E125H	125	
PDB321	2/0 - 8	4 - 10	65	480	EGC125, E125C, EGH125, E125H	125	24 x 20 x 6.75
	2/0 - 8	12	22	480	EGC125, E125C, EGE125, E125E, EGS125, E125S, EGH125, E125H	125	
	2/0 - 8	14	14	480	EGC125, E125C, EGB125, E125B, EGE125, E125E, EGS125, E125S, EGH125, E125H	125	
PDB323	350 - 4	4 - 6	65	480	JGH250, J250H	250	24 x 20 x 6.75
	350 - 4	8	42	480	JGH250, J250H	250	
	350 - 4	10	14	480	JGH250, J250H, JGE250, J250E, JGS250, J250S,	250	
	350 - 4	4 - 6	65	480	JGC250, J250C, JGU250, J250U, JGX250, J250X	250	
		8	42				
		10	25				
		8	50				
		10	25				
PDB370	350 - 4	4 - 6	65	480	JGH250, J250H	250	24 x 20 x 6.75
	350 - 4	8	42	480	JGH250, J250H	250	
	350 - 4	10	14	480	JGH250, J250H, JGE250, J250E, JGS250, J250S,	250	
	350 - 4	4 - 6	65	480	JGC250, J250C, JGU250, J250U, JGX250, J250X	250	
		8	42				
		10	25				
PDB371	350 - 4	4 - 6	50	480	JGH250, J250H	250	24 x 20 x 6.75
	350 - 4	8	42	480	JGH250, J250H	250	
	350 - 4	10	14	480	JGH250, J250H, JGE250, J250E, JGS250, J250S,	250	
	350 - 4	4 - 6	65	480	JGC250, J250C, JGU250, J250U, JGX250, J250X	250	
		8	50				
		10	25				

Data sheet no. 10537

160, 162, 163, 164 and 165 UL Recognized open power distribution blocks

UL Recognized power distribution blocks offer a variety of lineside and loadside port configurations for greater flexibility in panel wiring and wire management.

These blocks are UL Recognized to UL 1059 and rated for use in UL 508A industrial control panels.

Blocks are factory configured in 1-, 2 and 3-pole versions, and have optional covers to enhance safety (order covers separately).

Ratings

- Volts 600 V
- Amps 175 to 1520 A
- SCCR up to 200 kA* (see table for SCCR by catalog number)

* Maximum SCCR contingent upon the application of an upstream current-limiting overcurrent protective device. See table for fusing requirements.

Conductors†

- Stranded 75°C copper and aluminum
- Higher temperature rated conductors permitted with appropriate derating

† As specified in the catalog number table.

Agency information

- UL 1059 Recognized, Guide XCFR2, File E62622
- CSA Certified, Class 6228-01, File 15364

Flammability rating

- UL 94 V0

Optional covers

- See table for catalog numbers and ordering details

How to order

From the catalog number tables, select the catalog number that defines the desired lineside/loadside port and conductor characteristics.

Add to the catalog number the suffix that defines the desired pole configuration. Note, you must select from the available number of poles for each catalog number. These appear in the second column of the catalog number tables.

Catalog number example — 16220-3 is a 3-pole 16220

Where:

- The prefix "16220" defines the block's lineside characteristics (i.e., one conductor port per pole that accepts 2/0 - 14 Cu, or 2/0 - 8 Al conductors) and the loadside characteristics (i.e., four conductor ports per pole that each accepts 4 - 14 Cu or 4 - 8 Al conductors)
- The suffix "3" in this example defines this as a three-pole block
- See the catalog number tables for details on the available lineside/loadside characteristics

Dual wire port application

- Rated for dual wire port application to increase the possible number of lineside and loadside connections. E.g., 16220-1 can accept two wires into the lineside port (4 - 14 Cu, 4 - 8 Al) and two wires per port (eight connections total) on the loadside lug (8 - 14 Cu, 8 Al).
- Dual wire applications are only viable when using two wires of the same size, stranding, and insulating and conductor material.

Ferrule terminal application

- Bussmann series UL Recognized power distribution blocks are rated for use with UL Listed ferrules (see catalog number table for details).
- Ferrule applications allow for the use of a broader range of conductor stranding and simulate a more efficient, solid wire connection with the terminal port.
- Always use UL Listed ferrules in accordance with the manufacturer's specifications and instructions.

Optional covers

For block catalog number starting	Order cover catalog number
160__	CPB160-(poles)*
162__	CPB162-(poles)*
163__	CPDB-(poles)*
165__	CPDB165**

* Order one cover for each block by specifying the number of poles in the catalog number suffix. E.g., For the block catalog number 16021-4, order the cover catalog number CPD160-4.

** Order one cover for each of the block's poles. E.g., For block catalog number 16530-3, order three of cover catalog number CPDB165.

Line/load port configuration	No. of poles	Current rating (A)	Lineside Wire size (Sol/ferrule unless noted)*	Lineside Wires per port	Lineside Torque N•m (lb-in)	Lineside Ports/pole	Loadside Wire size (Sol/ferrule unless noted)*	Loadside Wires per port	Loadside Torque N•m (lb-in)	Loadside Ports/pole	Max SCCR (kA)†	Catalog no.
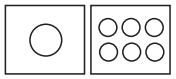	2, 3, 4	175	2/0 - 1 Cu/Al (Str)	1	13.6 (120)	1	4 - 6 Cu/Al (Str)	1	4.0 (35)	6	10	16021-_
			2 - 3 Cu/Al	1			8 Cu	1	2.8 (25)			
			4 - 8 Cu/Al	1-2			8 Al (Str)	1-2				
			10 - 14 Cu	1-2			10 - 14 Cu	1-2	2.3 (20)			
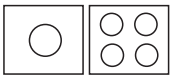	1, 2, 3	175	2/0 - 1 Cu/Al (Str)	1	13.6 (120)	1	4 - 6 Cu/Al (Str)	1	4.0 (35)	4	200	16220-_
			2 - 3 Cu/Al	1			8 Cu	1	2.8 (25)			
			4 - 8 Cu/Al	1-2			8 Al (Str)	1-2				
			10 - 14 Cu	1-2			10 - 14 Cu	1-2	2.3 (20)			
	1, 2, 3	175	2/0 - 1 Cu/Al (Str)	1	13.6 (120)	1	4 - 6 Cu/Al (Str)	1	4.0 (35)	4	200	16220-_H†††
			2 - 3 Cu/Al	1			8 Cu	1	2.8 (25)			
			4 - 8 Cu/Al	1-2			8 Al (Str)	1-2				
			10 - 14 Cu	1-2			10 - 14 Cu	1-2	2.3 (20)			
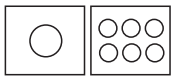	1, 2, 3	175	2/0 - 1 Cu/Al (Str)	1	13.6 (120)	1	4 - 6 Cu/Al (Str)	1	4.0 (35)	6	200	16321-_
			2 - 3 Cu/Al	1			8 Cu	1	2.8 (25)			
			4 - 8 Cu/Al	1-2			8 Al (Str)	1-2				
			10 - 14 Cu	1-2			10 - 14 Cu	1-2	2.3 (20)			
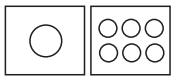	2,3,4	310	350kcmil - 2/0 Cu/Al (Str)	1	31.1 (275)††	1	4 - 6 Cu/Al (Str)	1	4.0 (35)	6	10	16023-_
			1/0 Cu/Al (Str)	1-2			8 Cu	1	2.8 (25)			
							8 Al (Str)	1-2				
			1 - 6 Cu/Al	1-2			10 - 12 Al (Str)	1	2.3 (20)			
							10 - 14 Cu	1-2				
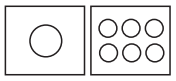	1, 2, 3	310	350kcmil - 2/0 Cu/Al (Str)	1	31.1 (275)††	1	4 - 6 Cu/Al (Str)	1	4.0 (35)	6	200	16323-_
			1/0 Cu/Al (Str)	1-2			8 Cu	1	2.8 (25)			
							8 Al (Str)	1-2				
			1 - 6 Cu/Al	1-2			10 - 12 Al (Str)	1	2.3 (20)			
							10 - 14 Cu	1-2				
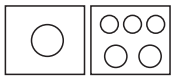	1, 2, 3	310	350kcmil - 2/0 Cu/Al (Str)	1	31.1 (275)††	1	2 - 3 Cu/Al (Str)	1	5.6 (50)	3	10	16332-_
							4 Cu/Al	1	5.1 (45)			
							6 Cu/Al	1-2				
							8 Cu/Al	1-2	4.5 (40)			
							10 - 14 Cu	1-2	4.0 (35)			
			1/0 Cu/Al (Str)	1-2			1/0 - 3 Cu/Al (Str)	1	13.6 (120)	2		
							4 Cu	1				
							4 - 8 Al (Str)	1-2				
			1 - 6 Cu/Al	1-2			6 - 14 Cu	1-2				
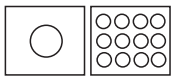	1, 2, 3	310	350kcmil - 2/0 Cu/Al (Str)	1	31.1 (275)††	1	4 - 6 Cu/Al (Str)	1	4.0 (35)	12	200	16370-_
			1/0 Cu/Al (Str)	1-2			8 Cu	1	2.8 (25)			
							8 Al (Str)	1-2				
			1 - 6 Cu/Al	1-2			10 - 12 Al (Str)	1	2.3 (20)			
							10 - 14 Cu	1-2				
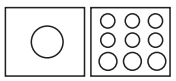	1, 2, 3	310	350kcmil - 2/0 Cu/Al (Str)	1	31.1 (275)††	1	2 - 3 Cu/Al (Str)	1	5.6 (50)	6	200	16371-_
							4 - 6 Cu/Al (Str)	1	5.1 (45)			
							8 Cu/Al (Str)	1	4.5 (40)			
							10 - 14 Cu (Str)	1	4.0 (35)			
			1/0 Cu/Al (Str)	1-2			1/0 - 3 Cu/Al (Str)	1	13.6 (120)	3		
							4 - 8 Cu/Al	1				
							10 - 14 Cu	1				
			1 - 6 Cu/Al	1-2			6 - 14 Cu	2				
							4 - 8 Al (Str)	2				
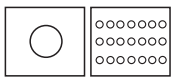	1, 2, 3	310	350kcmil - 2/0 Cu/Al (Str)	1	31.1 (275)††	1	10 Cu/Al	1	0.8 (7)	21	10	16372-_
			1/0 Cu/Al (Str)	1-2			12 - 14 Cu	1				
			1 - 6 Cu/Al	1-2								

* 75°C wire (higher temperature rated wire acceptable with appropriate derating). Using a ferrule on a stranded conductor requires a correctly sized UL Listed ferrule (customer supplied) applied according to the manufacturer's specifications. Ferrule ratings apply to copper wire only.
** Not covered by CSA certification.
† See Short-Circuit Current Ratings table for the tested upstream overcurrent protective devices necessary for achieving these SCCRs.
†† Torque rating for dual wire and ferrule application is 30.5 N•m (270 lb-in).
††† Configuration includes hex screws.

Data sheet no. 10533

Line/load port configuration	No. of poles	Current rating (A)	Lineside: Wire size (Sol/ferrule unless noted)*	Lineside: Wires per port	Lineside: Torque N•m (lb-in)	Lineside: Ports/pole	Loadside: Wire size (Sol/ferrule unless noted)*	Loadside: Wires per port	Loadside: Torque N•m (lb-in)	Loadside: Ports/pole	Max SCCR (kA)†	Catalog no.
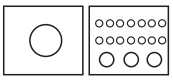	1, 2, 3	310	350kcmil - 2/0 Cu/Al (Str)	1	31.1 (275)††	1	10 Cu/Al	1	0.8 (7)	14	10	16373-_
							12 - 14 Cu	1				
			1/0 Cu/Al (Str)	1-2			1/0 - 3 Cu/Al (Str)	1	13.6 (120)	3		
							4 Cu	1				
							6 - 14 Cu	1-2				
							4 - 8 Al (Str)	1-2				
			1 - 6 Cu/Al	1-2			10 - 14 Al (Str)	1				
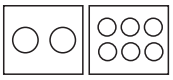	1, 2, 3	350	2/0 - 1 Cu/Al (Str)	1	13.6 (120)	2	4 - 6 Cu/Al (Str)	1	4.0 (35)	6	10	16325-_
			2 - 3 Cu/Al	1			8 Cu	1	2.8 (25)			
			4 - 8 Cu/Al	1-2			8 Al (Str)	1-2				
			10 - 14 Cu	1-2			10 - 14 Cu	1-2	2.3 (20)			
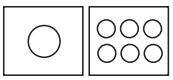	1, 2, 3	380	500kcmil - 4/0 Cu/Al (Str)	1	56.5 (500)	1	2 - 3 Cu/Al (Str)	1	5.6 (50)	6	10	16330-_
							4 Cu/Al	1	5.1 (45)			
			3/0 - 1/0 Cu/Al (Str)	1-2			6 Cu/Al	1-2				
							8 Cu/Al	1-2	4.5 (40)			
			1 - 6 Cu/Al	1-2			10 - 12 Al (Str)	1	4.0 (35)			
							10 - 14 Cu	1-2				
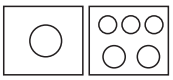	1, 2, 3	380	500kcmil - 4/0 Cu/Al (Str)	1	56.5 (500)	1	2 - 3 Cu/Al (Str)	1	5.6 (50)	3	10	16335-_
							4 Cu/Al	1	5.1 (45)			
							6 Cu/Al	1-2				
			3/0 - 1/0 Cu/Al (Str)	1-2			8 Cu/Al	1-2	4.5 (40)			
							10 - 14 Cu	1-2	4.0 (35)			
			1 - 6 Cu/Al	1-2			1/0 - 3 Cu/Al (Str)	1	13.6 (120)	2		
							4 Cu	1				
							4 - 8 Al (Str)	1-2				
							6 - 14 Cu	1-2				
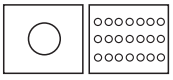	1, 2, 3	380	500kcmil - 4/0 Cu/Al (Str)	1	56.5 (500)	1	6 Cu/Al (Str)	1	4.0 (35)	21	10	16541-_
			3/0 - 1/0 Cu/Al (Str)	1-2			8 Cu	1	2.8 (25)			
							8 Al (Str)	1-2				
			1 - 6 Cu/Al	1-2			10 - 14 Al (Str)	1	2.3 (20)			
							10 - 14 Cu	1-2				
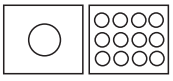	1, 2, 3	420	600kcmil - 2 Cu/Al (Str)	1	56.5 (500)	1	4 - 6 Cu/Al (Str)	1	4.0 (35)	12	10	16375-_
							8 Cu	1	2.8 (25)			
							8 Al (Str)	1-2				
							10 - 12 Al (Str)	1	2.3 (20)			
							10 - 14 Cu	1-2				

* 75°C wire (higher temperature rated wire acceptable with appropriate derating). Using a ferrule on a stranded conductor requires a correctly sized UL Listed ferrule (customer supplied) applied according to the manufacturer's specifications. Ferrule ratings apply to copper wire only.
† See Short-Circuit Current Ratings table for the tested upstream overcurrent protective devices necessary for achieving these SCCRs.
††Dual wire and ferrule application torque rating = 30.5 N•m (270 lb-in).

Short-Circuit Current Rating (SCCR) data

Catalog no.	No. of poles	Conductors (AWG/kcmil): Lineside	Conductors (AWG/kcmil): Loadside	Fuse Class/Bussmann series symbol/amp rating: J — LPJ	RK1 — LPN-RK (250 V), LPS-RK (600 V)	RK5 — FRN-R (250 V), FRS-R (600 V)	T — JJN (300 V), JJS (600 V)	SCCR (kA)
16220-_	1, 2, 3	2/0 - 8	4 - 12	200	200	60	200	200
			4 - 14	175	100	60	175	100
16321-_	1, 2, 3	2/0 - 8	4 - 12	400	200	100	400	200
				175	100	60	175	100
16323-_	1, 2, 3	350 - 4	4 - 8	400	200	100	400	200
			4 - 12	175	100	60	175	100
16370-_	1, 2, 3	350 - 4	4 - 8	400	200	100	400	200
			4 - 14	175	100	60	175	100
16371-_	1, 2, 3	350 - 4	1/0 - 6	400	200	100	400	200
			1/0 - 12	175	100	60	175	100

Line/load port configuration	No. of poles	Current rating (A)	Lineside Wire size (Str/ferrule unless noted)*	Lineside Wires per port	Lineside Torque N•m (lb-in)	Lineside Ports/ pole	Loadside Wire size (Str/ferrule unless noted)*	Loadside Wires per port	Loadside Torque N•m (lb-in)	Loadside Ports/ pole	Max SCCR (kA)†	Catalog no.
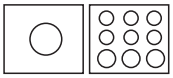	1, 2, 3	420	600kcmil - 2 Cu/Al (Str)	1	56.5 (500)	1	2 - 3 Cu/Al (Str)	1	5.6 (50)	6	10	16376-_
							4 Cu/Al	1	5.1 (45)			
							6 Cu/Al	1-2				
							8 Cu/Al	1-2	4.5 (40)			
							10 - 14 Cu	1-2	4.0 (35)			
							1/0 - 3 Cu/Al (Str)	1	13.6 (120)	3		
							4 Cu	1				
							6 - 14 Cu	1-2				
							4 - 8 Al (Str)	1-2				
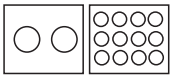	1, 2, 3	570	300kcmil - 2/0 Cu/Al (Str)	1	31.1 (275)††	2	4 - 6 Cu/Al (Str)	1	4.0 (35)	12	10	16377-_
			1/0 Cu/Al (Str)	1-2			8 Cu	1	2.8 (25)			
			1 - 2 Cu/Al	1-2			8 Al (Str)	1-2				
			4 Cu/Al (Str)	1-2			10 - 12 Al (Str)	1	2.3 (20)			
							10 - 14 Cu	1-2				
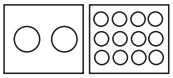	1, 2, 3	760	500kcmil - 4/0 Cu/Al (Str)	1	56.5 (500)	2	4 - 6 Cu/Al (Str)	1	4.0 (35)	12	10	16530-_
			3/0 - 1/0 Cu/Al (Str)	1-2			8 Cu	1	2.8 (25)			
							8 Al (Str)	1-2				
			1 - 6 Cu/Al	1-2			10 - 14 Al (Str)	1	2.3 (20)			
							10 - 14 Cu	1-2				
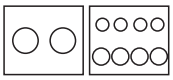	1, 2, 3	840	600kcmil - 2 Cu/Al	1	56.5 (500)	2	3/0 - 6 Cu/Al (Str)	1	13.6 (120)	4	10	16528-_
							4 - 6 Cu/Al (Str)	1	4.0 (35)	4		
							8 Cu	1	2.8 (25)			
							8 Al (Str)	1-2				
							10 - 14 Al (Str)	1	2.3 (20)			
							10 - 14 Cu	1-2				
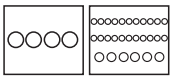	1	1520	500kcmil - 4/0 Cu/Al (Str)	1	56.5 (500)	4	2 - 3 Cu/Al (Str)	1	5.6 (50)	22	10	16400
							4 Cu/Al	1	5.1 (45)			
							6 Cu/Al	1-2				
							8 Cu/Al	1-2	4.5 (40)			
			3/0 - 1/0 Cu/Al (Str)	1-2			10 - 14 Cu	1-2	4.0 (35)			
							1/0 - 3 Cu/Al (Str)	1	13.6 (120)	6		
							4 Cu	1				
			1 - 6 Cu/Al	1-2			4 - 8 Al (Str)	1-2				
							6 - 14 Cu	1-2				

* 75°C wire (higher temperature rated wire acceptable with appropriate derating). Using a ferrule on a stranded conductor requires a correctly sized UL Listed ferrule (customer supplied) applied according to the manufacturer's specifications. Ferrule ratings apply to copper wire only.
† See Short-Circuit Current Ratings table for the tested upstream overcurrent protective devices necessary for achieving these SCCRs.
††Dual wire and ferrule application torque rating = 30.5 N•m (270 lb-in).

Data sheet no. 10533

162, 163 and 165 UL Recognized stud power terminal blocks

Port-to-stud and stud-to-stud power terminal blocks are available with current ratings up to 760 A. These blocks provide a convenient stud connection means for lug/ring wire terminals.

Factory configured from 1- to 3-poles (catalog number dependent) with optional covers to enhance safety (order covers separately), these blocks are UL Recognized to UL 1059 and rated for use in UL 508A industrial control panels.

Ratings

- Volts 600 V
- Amps 150 up to 760 A
- SCCR up to 200 kA* (see table for SCCR by catalog number)

* Maximum SCCR contingent upon the application of an upstream current-limiting overcurrent protective device. See table for fusing requirements.

Conductors†

- Stranded 75°C copper and aluminum
- Higher temperature rated conductors permitted with appropriate derating

† As specified in the catalog number table.

Agency information

- UL 1059 Recognized, Guide XCFR2, File E62622
- CSA Certified, Class 6228-01, File 15364

Flammability rating

- UL 94 V0

Optional covers

- See table for catalog numbers specific to each block

How to order

From the catalog number tables, select the catalog number that defines the desired lineside/loadside port and conductor characteristics.

Add to the catalog number the suffix that defines the desired pole configuration. Note, you must select from the available number of poles for each catalog number. These appear in the second column of the catalog number tables.

Catalog number example — 16280-3 is a 3-pole 16280

Where:

- The prefix "16280" defines the block's lineside characteristics (i.e., one conductor port per pole that accepts 2/0 - 14 Cu/Al conductors) and the loadside characteristics (i.e., 1/4-20 x 3/4" stud)
- The suffix "3" in this example defines this as a three-pole block
- See the catalog number tables for details on the available lineside/loadside characteristics

Dual wire port application

- Rated for dual wire port application to increase the possible number of lineside and loadside connections. E.g., 16280-1 can accept two wires into the lineside port (#4 - #8 Cu/Al, #10 - #14 Cu).
- Dual wire applications are only viable when using two wires of the same size, stranding, and insulating and conductor material in the same port

Ferrule terminal application

- Bussmann series stud blocks are rated for use with UL Listed ferrules (see catalog number table for details). Ferrule ratings apply to copper wire only.
- Ferrule applications allow for the use of a broader range of conductor stranding and simulate a more efficient, solid wire connection with the terminal port
- Always use UL Listed ferrules in accordance with the manufacturer's specifications and instructions

Optional covers

Electrical safety can be enhanced by installing optional covers. From the table below, order the cover catalog number that matches the block catalog number.

Block catalog no.	Poles	Cover catalog no.
16280-1	1	CPB162-1*
16280-2	2	CPB162-2*
16280-3	3	CPB162-3*
16280-2-M	2	CPB162-2*
16280-3-M	3	CPB162-3*
16281-1	1	CPB162-1*
16281-2	2	CPB162-2*
16281-3	3	CPB162-3*
16290-1	1	CPB162-1*
16290-2	2	CPB162-2*
16290-3	3	CPD162-3*
16378-1	1	CPDB-1*
16378-2	2	CPDB-2*
16378-3	3	CPDB-3*
16383-1	1	CPDB-1*
16383-2	2	CPDB-2*
16383-3	3	CPDB-3*
16390-1	1	CPDB-1*
16390-2	2	CPDB-2*
16390-3	3	CPDB-3*
16392-1-H	1	CPDB-1*
16392-2-H	2	CPDB-2*
16392-3-H	3	CPDB-3*
16394-1	1	CPDB-1*
16394-2	2	CPDB-2*
16394-3	3	CPDB-3*
16395-1	1	CPDB-1*
16395-2	2	CPDB-2*
16395-3	3	CPDB-3*
16582-1	1	CPDB165**
16582-2	2	CPDB165**
16582-3	3	CPDB165**
16591-1	1	CPDB165**
16591-2	2	CPDB165**
16591-3	3	CPDB165**
16593-1	1	CPDB165**
16593-2	2	CPDB165**
16593-3	3	CPDB165**

* Cover catalog number provides one individual cover for each block.
**Order one cover for each pole.

Line/load configuration	No. of poles	Current rating (A)	Lineside: Wire/stud size (Str/ferrule unless noted)*	Lineside: Wires per port	Lineside: Torque N•m (lb-in)	Lineside: Ports/ pole	Loadside: Stud/ connector size	Loadside: Studs/ pole	SCCR (kA)	Catalog no.
Connector - to - stud										
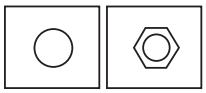	1, 2, 3	175	2/0 - 1 Cu/Al (Str) 2 - 3 Cu/Al 4 - 8 Cu/Al 10 - 14 Cu	1 1-2	13.6 (120)	1	1/4-20 x 3/4″ stud	1	200†	16280-_**
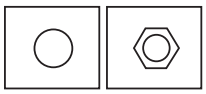	2, 3	175	2/0 - 1 Cu/Al (Str) 2 - 3 Cu/Al 4 - 8 Cu/Al 10 - 14 Cu	1 1-2	13.6 (120)	1	M6 x 1″ stud	1	200†	16280-_-M
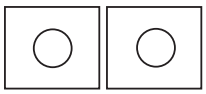	1, 2, 3	175	2/0 - 1 Cu/Al (Str) 2 - 3 Cu/Al 4 - 8 Cu/Al 10 - 14 Cu	1 1-2	13.6 (120)	1	1/4-20 tapped hole	1	10	16281-_**
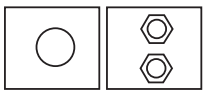	1, 2, 3	380	500kcmil - 4/0 Cu/Al (Str) 3/0 - 1/0 Cu/Al (Str) 1 - 6 Cu/Al	1 1-2	56.5 (500)	1	1/4-20 x 1″ stud	2	10	16378-_
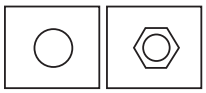	1, 2, 3	380	500kcmil - 4/0 Cu/Al (Str) 3/0 - 1/0 Cu/Al (Str) 1 - 6 Cu/Al	1 1-2	56.5 (500)	1	3/8-16 x 1″ stud	1	10	16383-_
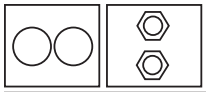	1, 2, 3	760	500kcmil - 4/0 Cu/Al (Str) 3/0 - 1/0 Cu/Al (Str) 1 - 6 Cu/Al	1 1-2	56.5 (500)	2	3/8-16 x 1-5/8″ stud	2	10	16582-_
Stud - to - stud										
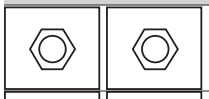	1, 2, 3	175	1/4-20 x 3/4″ stud			1	1/4-20 x 3/4″ stud	1	10	16290-_**
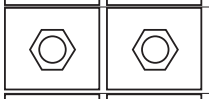	1, 2, 3	250	3/8-16 x 1-1/8″ stud			1	3/8-16 x 1-1/8″ stud	1	10	16390-_
	1, 2, 3	310	3/8-16 x 1-7/16″ stud			1	1/4-20 x 9/16″ stud	2	10	16395-_
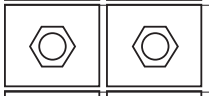	1, 2, 3	400	3/8-16 x 1-1/8″ stud			1	3/8-16 x 1-1/8″ stud	1	10	16392-_-H††
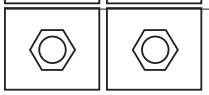	1, 2, 3	400	1/2-13 x 1-1/16″ stud			1	1/2-13 x 1-1/16″ stud	1	10	16394-_
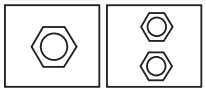	1, 2, 3	400	3/8-16 x 1-7/16″ stud			1	3/8-16 x 1-7/16″ stud	2	10	16591-_**
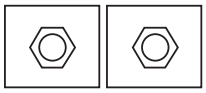	1, 2, 3	600	1/2-13 x 1″ stud			1	1/2-13 x 1″ stud	1	10	16593-_

* 75°C wire (higher temperature rated wire acceptable with appropriate derating). Using a ferrule on a stranded conductor requires a correctly sized UL Listed ferrule (customer supplied) applied according to the manufacturer's specifications. Ferrule ratings apply to copper wire only.
**Not covered by CSA certification.
† See table below for the tested upstream overcurrent protective devices necessary for achieving this SCCR.
††Configuration includes washers and hex nuts for each stud.

Short-Circuit Current Rating (SCCR) data for block 16280-_

Catalog no.	No. of poles	Conductors (AWG): Lineside	Conductors (AWG): Loadside	Fuse class/Bussmann series symbol/amp rating: Class J LPJ	Class RK1 LPN-RK (250 V) LPS-RK (600 V)	Class RK5 FRN-R (250 V) FRS-R (600 V)	Class T JJN (300 V) JJS (600 V)	SCCR (kA)
16280-_	1, 2, 3	2/0 - 8	1/4-20x3/4 stud	200	200	60	200	200

Data sheet no. 10535

160, 162, 163 and 165 UL Recognized power splicer blocks

Splicer blocks allow for increasing or decreasing wire size within a circuit to accommodate different connections from the power source to the branch load.

These blocks are factory configured from 1- to 4-poles (catalog number dependent) for wire sizes up to 500kcmil and amp ratings up to 760 A. Optional covers are available to enhance safety (order covers separately).

These blocks are UL Recognized to UL 1059 and rated for use in UL 508A industrial control panels.

Ratings

- Volts 600 V
- Amps 115 to 760 A
- SCCR up to 200 kA* (see table for SCCR by catalog number)

* Maximum SCCR contingent upon the application of an upstream current-limiting overcurrent protective device. See table for fusing requirements.

Conductors†

- Stranded 75°C copper and aluminum
- Higher temperature rated conductors permitted with appropriate derating

† As specified in the catalog number table.

Agency information

- UL 1059 Recognized, Guide XCFR2, File E62622
- CSA® Certified, Class 6228-01, File 15364

Flammability rating

- UL 94 V0

Optional covers

- See table for catalog numbers specific to each block

How to order

From the catalog number tables, select the catalog number that defines the desired lineside/loadside port and conductor characteristics.

Add to the catalog number the suffix that defines the desired pole configuration. Note, you must select from the available number of poles for each catalog number. These appear in the second column of the catalog number tables.

Catalog number example — 16204-3 is a 3-pole 16204

Where:

- The prefix "16204" defines the block's lineside and loadside characteristics (i.e., conductor port per pole that accepts 2/0 - #14 Cu, or 2/0 - #12 Al conductors)
- The suffix "3" in this example defines this as a three-pole block
- See the catalog number tables for details on the available lineside/loadside characteristics

Dual wire port application

- Rated for dual wire port application to increase the possible number of lineside and loadside connections. E.g., 16303-1 can accept two wires into the lineside port (1/0 - #6 Cu/Al) and two wires per port (2 connections per pole total) on the loadside lug (1/0 - #6 Cu/Al).
- Dual wire applications are only viable when using two wires of the same size, stranding, and insulating and conductor material in the same port.

Ferrule terminal application

- Bussmann series splicer blocks are rated for use with UL Listed ferrules (see catalog number table for details). Ferrule ratings apply to copper wire only.
- Ferrule applications allow for the use of a broader range of conductor stranding and simulate a more efficient, solid wire connection with the PDB terminal port
- Always use UL Listed ferrules in accordance with the manufacturer's specifications and instructions

Optional covers

Electrical safety can be enhanced by installing optional covers. From the table below, order the cover catalog number that matches the block catalog number.

Block catalog no.	Poles	Cover catalog no.
16000-2	2	CPB160-2*
16000-3	3	CPB160-3*
16000-4	4	CPB160-4*
16003-2	2	CPB160-2*
16003-3	3	CPB160-3*
16003-4	4	CPB160-4*
16005-2	2	CPB160-2*
16005-3	3	CPB160-3*
16005-4	4	CPB160-4*
16200-1	1	CPB162-1*
16200-2	2	CPB162-2*
16200-3	3	CPB162-3*
16201-1	1	CPB162-1*
16201-2	2	CPB162-2*
16201-3	3	CPB162-3*
16204-1	1	CPB162-1*
16204-2	2	CPB162-2*
16204-3	3	CPD162-3*
16301-1	1	CPDB-1*
16301-2	2	CPDB-2*
16301-3	3	CPDB-3*
16303-1	1	CPDB-1*
16303-2	2	CPDB-2*
16303-3	3	CPDB-3*
16306-1	1	CPDB-1*
16306-2	2	CPDB-2*
16306-3	3	CPDB-3*
16500-1	1	CPDB165**
16500-2	2	CPDB165**
16500-3	3	CPDB165**
16504-1	1	CPDB165**
16504-2	2	CPDB165**
16504-3	3	CPDB165**

* Cover catalog number provides one individual cover for each block.
**Order one cover for each pole.

Data sheet no. 10534

Line/load port configuration	No. of poles	Current rating (A)	Lineside Wire size (Str/ferrule unless noted)*	Lineside Wires per port	Lineside Torque N•m (lb-in)	Lineside Ports/ Pole	Loadside Wire size (Str/ferrule unless noted)*	Loadside Wires per port	Loadside Torque N•m (lb-in)	Loadside Ports/ pole	SCCR (kA)	Catalog no.
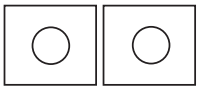	1, 2, 3	115	2 - 3 Cu/Al (Str)	1	5.6 (50)	1	2 - 3 Cu/Al (Str)	1	5.6 (50)	1	10	16200-_**
			4 - 6 Cu/Al (Str)	1	5.1 (45)		4 - 6 Cu/Al (Str)	1	5.1 (45)			
			8 Cu/Al (Str)	1	4.5 (40)		8 Cu/Al (Str)	1	4.5 (40)			
			10 - 14 Cu (Str)	1	4.0 (35)		10 - 14 Cu (Str)	1	4.0 (35)			
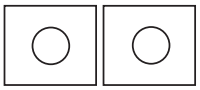	1, 2, 3	150	1/0 - 3 Cu (Str)	1	5.6 (50)	1	1/0 - 3 Cu (Str)	1	5.6 (50)	1	10	16201-_
			4 - 6 Cu (Str)	1	5.1 (45)		4 - 6 Cu (Str)	1	5.1 (45)			
			8 Cu (Str)	1	4.5 (40)		8 Cu (Str)	1	4.5 (40)			
			10 - 14 Cu (Str)	1	4.0 (35)		10 - 14 Cu (Str)	1	4.0 (35)			
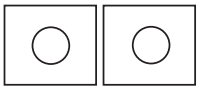	2, 3, 4	175	2/0 - 1 Cu/Al (Str)	1	12.4 (110)	1	2/0 - 1 Cu/Al (Str)	1	12.4 (110)	1	10	16000-_**
			2 - 8 Cu/Al	1			2 - 8 Cu/Al	1				
			10 - 12 Al (Str)	1	4.0 (35)		10 - 12 Al (Str)	1	4.0 (35)			
			10 - 14 Cu	1			10 - 14 Cu	1				
			4 - 8 Cu/Al	2	13.6 (120)		4 - 8 Cu/Al	2	13.6 (120)			
			10 - 14 Cu	2			10 - 14 Cu	2				
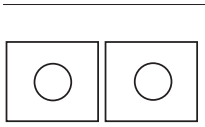	1, 2, 3	175	2/0 - 1 Cu/Al (Str)	1	12.4 (110)	1	2/0 - 1 Cu/Al (Str)	1	12.4 (110)	1	200†	16204-_
			2 - 8 Cu/Al	1			2 - 8 Cu/Al	1				
			10 - 12 Al (Str)	1	4.0 (35)		10 - 12 Al (Str)	1	4.0 (35)			
			10 - 14 Cu	1			10 - 14 Cu	1				
			4 - 8 Cu/Al	2	13.6 (120)		4 - 8 Cu/Al	2	13.6 (120)			
			10 - 14 Cu	2			10 - 14 Cu	2				
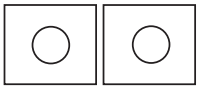	2, 3, 4	255	250kcmil - 6 Cu	1	42.4 (375)	1	250kcmil - 6 Cu	1	42.4 (375)	1	10	16003-_**
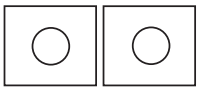	1, 2, 3	255	250kcmil - 6 Cu	1	42.4 (375)	1	250kcmil - 6 Cu	1	42.4 (375)	1	10	16301-_
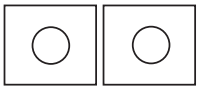	2, 3, 4	310	350kcmil - 2/0 Cu/Al (Str)	1	31.1 (275)††	1	350kcmil - 2/0 Cu/Al (Str)	1	31.1 (275)††	1	10	16005-_**
			1/0 Cu/Al (Str)	1-2			1/0 Cu/Al (Str)	1-2				
			1 - 6 Cu/Al	1-2			1 - 6 Cu/Al	1-2				
	1, 2, 3	310	350kcmil - 2/0 Cu/Al (Str)	1	31.1 (275)††	1	350kcmil - 2/0 Cu/Al (Str)	1	31.1 (275)††	1	10	16303-_
			1/0 Cu/Al (Str)	1-2			1/0 Cu/Al (Str)	1-2				
			1 - 6 Cu/Al	1-2			1 - 6 Cu/Al	1-2				
	1, 2, 3	380	500kcmil - 4/0 Cu/Al (Str)	1	56.5 (500)	1	500kcmil - 4/0 Cu/Al (Str)	1	56.5 (500)	1	10	16306-_
			3/0 - 1/0 Cu/Al (Str)	1-2			3/0 - 1/0 Cu/Al (Str)	1-2				
			1 - 6 Cu/Al	1-2			1 - 6 Cu/Al	1-2				
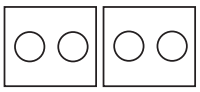	1, 2, 3	620	350kcmil - 2/0 Cu/Al (Str)	1	31.1 (275)††	2	350kcmil - 2/0 Cu/Al (Str)	1	31.1 (275)††	2	10	16500-_
			1/0 Cu/Al (Str)	1-2			1/0 Cu/Al (Str)	1-2				
			1 - 4 Cu/Al	1-2			1 - 4 Cu/Al	1-2				
			6 Cu/Al	2			6 Cu/Al	2				
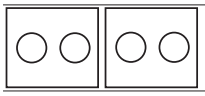	1, 2, 3	760	500kcmil - 4/0 Cu/Al (Str)	1	56.5 (500)	2	500kcmil - 4/0 Cu/Al (Str)	1	56.5 (500)	2	10	16504-_
			3/0 - 1/0 Cu/Al (Str)	1-2			3/0 - 1/0 Cu/Al (Str)	1-2				
			1 - 6 Cu/Al	1-2			1 - 6 Cu/Al	1-2				

* 75°C wire (higher temperature rated wire acceptable with appropriate derating). Using a ferrule on a stranded conductor requires a correctly sized UL Listed ferrule (customer supplied) applied according to the manufacturer's specifications. Ferrule ratings apply to copper wire only.
**Not covered by CSA certification.
† See table below for the tested upstream overcurrent protective devices necessary for achieving this SCCR.
††Torque rating for dual wire and ferrule application is 30.5 N•m (270 lb-in).

Short-Circuit Current Rating (SCCR) data for block 16204-_

Catalog no.	No. of poles	Conductors (AWG) Lineside	Conductors (AWG) Loadside	Fuse class/Bussmann series symbol/amp rating: Class J LPJ	Class RK1 LPN-RK (250 V) LPS-RK (600 V)	Class RK5 FRN-R (250 V) FRS-R (600 V)	Class T JJN (300 V) JJS (600 V)	SCCR (kA)	Min. enclosure size
16204-_	1, 2, 3	2/0 - 8	2/0 - 8	200	200	60	200	200	16 x 16 x 6.75

Data sheet no. 10534

11675 250 V screw/quick connect power terminal block

Lineside screw connection, loadside 0.250" quick-connect (3 per pole) power terminal block available from 2 to 6 poles (see catalog number table).

Ratings

- Volts 250 Vac/dc
- Amps Up to 40 A
- SCCR 10 kA per UL 508A, Table SB4.1

Agency information

- UL Recognized, Guide XCFR2, File E62622, CSA 47235, CE

Conductors/torque ratings

- 8-14 AWG Cu.
- 9 lb-in (1.0 N•m) max.

Catalog no. (poles)			
11675-2	11675-3	11675-4	11675-6

14002 600 V barrier terminal block

Barrier terminal block available from 2 to 6 poles with box lug terminals. 2- and 3-pole versions available with loadside 0.25" quick-connect terminals (4 per pole). See catalog numbers table.

Ratings

- Volts 600 Vac/dc
- Amps 115 A
- SCCR 10 kA per UL 508A Table SB4.1

Agency information

- UL Recognized, Guide XCFR2, File E62622, CSA 47235, CE

Conductors/torque ratings*

- Wire; 2 – 14 AWG Cu, 8 AWG Al.
- Torque; 2-3 AWG 50 (5.6 N•m), 4-6 AWG 45 (5.1 N•m), 8 AWG 40 (4.5 N•m), 10-14 AWG 35 (3.9 N•m)

* Consult factory for torque ratings on "Q" quick-connect terminal option.

Marking

- Marking strip optional on 2- and 3-pole configurations. See catalog numbers table.

Catalog no. (poles)			
Standard		**Loadside quick-connect terminals**	**Standard with marking strip**
14002-2	14002-5	Q14002-2	14002-2A
14002-3	14002-6	Q14002-3	14002-3A
14002-4			

11725 600 V screw/quick connect power terminal block

Lineside screw connection, loadside 0.250" quick-connect (4 per pole) power terminal block available in 2, 3 or 4 poles (see catalog number table).

Ratings

- Volts 600 Vac/dc
- Amps up to 70 A
- SCCR 10 kA per UL 508A Table SB4.1

Agency Information

- UL Recognized, Guide XCFR2, File E62622, CSA 47235, CE

Conductors/torque ratings

- 2 – 14 AWG Cu
- 8 AWG Al.
- 45 lb-in (5.1 N•m) max.

Catalog no. (poles)		
11725-2	11725-3	11725-4

14004 600 V dead front terminal block

Dead front terminal block available from 2 to 12 poles (see catalog number table).

Ratings

- Volts 600 Vac/dc
- Amps 90 A
- SCCR 10 kA per UL 508A Table SB4.1

Agency information

- UL Recognized, Guide XCFR2, File E62600, CSA 47235, CE

Conductors

- 4 – 14 AWG Cu
- 8 AWG Al

Marking

- Numeral marking molded into the top of the block is standard

Catalog no. (poles)			
14004-2	14004-5	14004-8	14004-12
14004-3	14004-6	14004-9	
14004-4	14004-7	14004-10	

BUSSMANN SERIES

Calculate available fault current anytime, anywhere

Eaton's Bussmann™ series **FC² Available Fault Current Calculator** is a simple-to-use mobile and web-based application that calculates single- and three-phase system fault current levels.

The free tool is available for all Apple® iPhones, iPads, and Android™ mobile devices and allows you to quickly and easily determine available fault current levels anywhere in an electrical distribution system.

What's more, FC² has English, Spanish and French modes to address local language and equipment marking requirements.

Download today from the Android or Apple store or visit Eaton.com/bussmannseries to learn more.

EATON BUSSMANN SERIES FC²

EATON
Powering Business Worldwide

Follow us on social media to get the latest product and support information.

Connector products to simplify wiring

Contents

Description	Section page
Compact rail and panel mount blocks	
NDN DIN-Rail and C-Rail feed through blocks	2-3
N512, NFT2, NFT3, NC3, NSE3, NSS3 C-Rail feed through blocks	4-5
15188, PLU3, PLU1, PSU1 depluggable DIN-Rail and C-Rail blocks	6-7
KT3, KT4 multi-pole panel mount blocks	7
BNQ21, BQQ41 quick-connect panel mount blocks	8
Power feed through terminal blocks	
C7021 1- to 6-pole block	9
Double row terminal blocks	
TB100 2- to 36-pole blocks	10-11
TB200 and TB200HB 2- to 30-pole blocks	12-13
TB300 and TB345 2- to 24-pole blocks	14-15
Accessories for double row terninal blocks	
Marking options and covers	16
Top and bottom marking strips for terminal blocks	17
Double row terminal blocks continued	
TB400 2- to 12-pole blocks	18
KU 2- to 12-pole blocks	19
Mounting accessories	
End brackets	20
DIN-Rail and C-Rail mounting rails and brackets	

NDN DIN-Rail feed through blocks

The NDN feed through blocks feature a compact line of terminal blocks suitable for both 35mm DIN-Rail or C-Rail applications. Products easily snap onto the mounting rail for a quick, simple, low-cost solution. Available accessories include jumpers and marking tape.

UL E62622

CSA File 15364

CSA File 47235 (NDN1, NDN111)

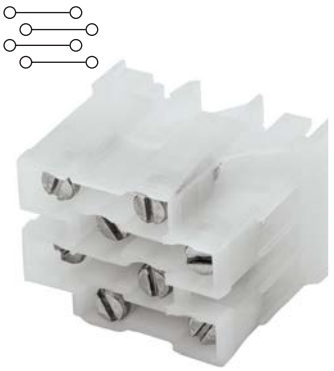

NDNV4

Approval	
Technical data	
Rated voltage	600V
Rated Current	30A
Center spacing, in (mm)	0.25 / 6.35
Conductor cross-section, flexible (AWG/mm²)	22~10 / 0.3~5.3
Number of Poles	4
Circuits per foot	48
Torque(N•m)	2
Torque(lb-in)	18
Screw	#6-32
WxHxD(mm)	25.4 x 34 x 42.4
Colors	**Cat. no.**
○ White (standard)	NDNV4-WH
● Black	NDNV4-BK
Accessories	**Cat. no.**
4 circuits	JN4
	MTC6
35mm DIN-Rail	DRL35MML DRL35MMHI
C-Rail	NFTA NRA
—	—

Dimensions — in (mm)

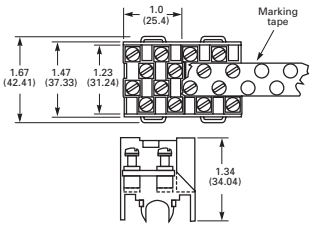

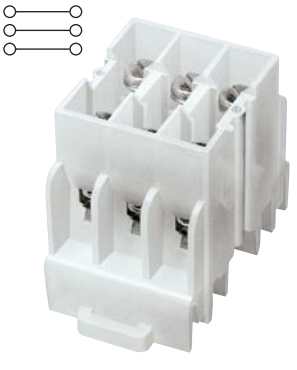

NDN3

Approval	
Technical data	
Rated voltage	600V
Rated Current	30A
Center spacing, in (mm)	0.3 / 7.62
Conductor cross-section, flexible (AWG/mm²)	22~10 / 0.3~5.3
Number of Poles	3
Circuits per foot	38
Torque(N•m)	2
Torque(lb-in)	18
Screw	#6-32
WxHxD(mm)	23.9 x 33.3 x 42.4
Colors	**Cat. no.**
○ White (standard)	NDN3-WH
● Blue	NDN3-BL
Accessories	**Cat. no.**
2 circuits	JNDN3
	MT12-1-2
35mm DIN-Rail	DRL35MML DRL35MMHI
C-Rail	NFTA NRA
—	—

Dimensions — in (mm)

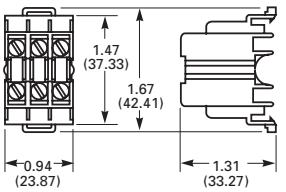

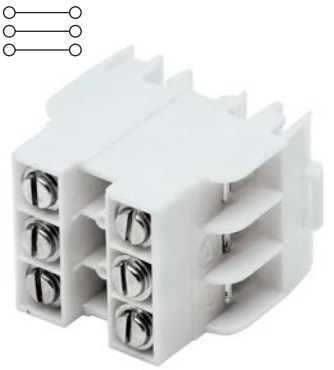

NDN63

Approval	
Technical data	
Rated voltage	600V
Rated Current	65A
Center spacing, in (mm)	0.375 / 9.52
Conductor cross-section, flexible (AWG/mm²)	18~6 / 0.8~13.3
Number of Poles	3
Circuits per foot	30
Torque(N•m)	4
Torque(lb-in)	35
Screw	#10-32
WxHxD(mm)	29.7 x 36.8 x 42.4
Colors	**Cat. no.**
○ White (standard)	NDN63-WH
● Black	NDN63-BK
Accessories	**Cat. no.**
2 circuits	JN1
	MT12-1-2
35mm DIN-Rail	DRL35MML DRL35MMHI
C-Rail	NFTA NRA
—	—

Dimensions — in (mm)

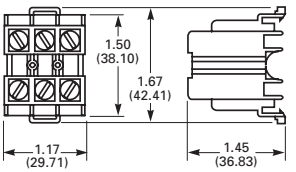

Block

Jumper

Marking tape

Mounting

Modular option

NDN1

Approval	
Technical data	
Rated voltage	600V
Rated Current	90A
Center spacing in (mm)	0.635 / 16.31
Conductor cross-section, flexible (AWG/mm²)	18~2 / 0.8~33.6
Number of Poles	1
Circuits per foot	18
Torque(N•m)	3.6
Torque(lb-in)	32
Screw	1/4-28
WxHxD(mm)	15 x 30.3 x 43.5
Colors	**Cat. no.**
○ White (standard)	NDN1-WH
Accessories	**Cat. no.**
—	—
	MT12-1-2
35mm DIN-Rail	DRL35MML DRL35MMHI
C-Rail	NFTA NRA

Dimensions — in (mm)

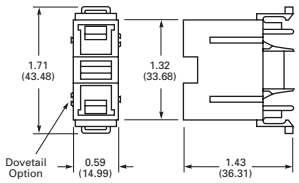

NDN111

Approval	
Technical data	
Rated voltage	600V
Rated Current	90A
Center spacing in (mm)	0.635 / 16.31
Conductor cross-section, flexible (AWG/mm²)	18~2 / 0.8~33.6
Number of Poles	3
Circuits per foot	18
Torque(N•m)	3.6
Torque(lb-in)	32
Screw	1/4-28
WxHxD(mm)	47.5 x 36.6 x 43.5
Colors	**Cat. no.**
○ White (standard)	NDN111-WH
● Black	NDN111-BK
Accessories	**Cat. no.**
2 circuits	JN1
	MT12-1-2
35mm DIN-Rail	DRL35MML DRL35MMHI
C-Rail	NFTA NRA
NDN111A-WH, NDN111A-BK	

Dimensions — in (mm)

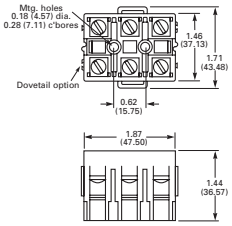

C-Rail feed through terminal blocks

C-Rail terminal blocks provide a low-profile, compact foot-print solution for various wire connection applications. Products feature an easy, snap-on installation method and an array of accessories including jumpers and marking strips.

UL E62622 (excluding N512)

CSA File 15364

CSA File 47235 (NFT3)

12-pole

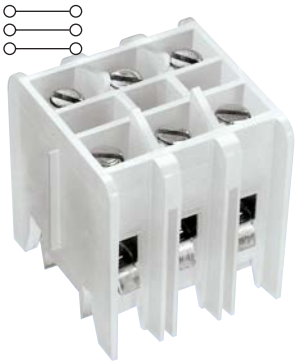

	N512	NFT2	NFT3
Approval			
Technical data			
Rated voltage	300V 600V	600V	600V
Rated current	20A 5A	40A	40A
Center spacing in (mm)	0.197 / 5.0	0.28 / 7.13	0.39 / 9.91
Conductor cross-section, flexible (AWG/mm²)	22~12 / 0.3~3.3	22~8 / 0.3~8.4	22~8 / 0.3~8.4
Number of Poles	12	2	3
Circuits per foot	60	38	28
Torque(N•m)	1.4	2	2
Torque(lb-in)	12	18	18
Screw	#4-48	#8-32	#8-32
WxHxD(mm)	61.0 x 27.7 x 22.4	16.5 x 34.7 x 42.8	30.0 x 32.9 x 31.4
Colors	**Cat. no.**	**Colors** / **Cat. no.**	**Colors** / **Cat. no.**
Block	● Black (standard) N512-BK	○ White (standard) NFT2-WH	○ White (standard) NFT3-WH
	— —	— —	● Black NFT3-BK
Accessories	**Cat. no.**	**Accessories** / **Cat. no.**	**Accessories** / **Cat. no.**
Jumper	12 circuits JN512	2 circuits JN2	2 circuits JN3
Marking tape	AT512	MT12-1-2	MT12-1-2
Mounting	C-Rail NFTA NRA	C-Rail NFTA NRA	C-Rail NFTA NRA
Dimensions — in (mm)			

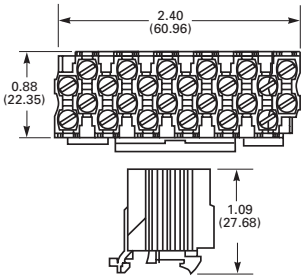

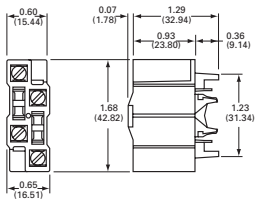

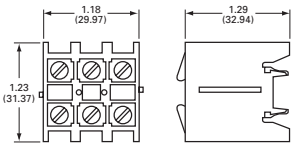

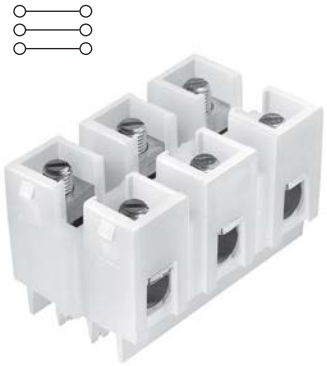

NC3

Approval	
Technical data	
Rated voltage	600V
Rated Current	175A
Center spacing in (mm)	1.06 / 26.92
Conductor cross-section, flexible (AWG/mm²)	14~2/0 /2.1~67.4 Cu/AL
Number of Poles	3
Circuits per foot	11
Torque(N•m)	5.1
Torque(lb-in)	45
Screw	5/16 - 24
WxHxD(mm)	79.4 x 44.5 x 44.5
Colors	**Cat. no.**
○ White (standard)	NC3-WH
—	—
Accessories	**Cat. no.**
—	—
	MT12-1-2
Panel mount C-Rail	— NFTA NRA
Dimensions — in (mm)	

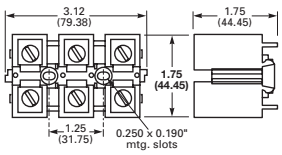

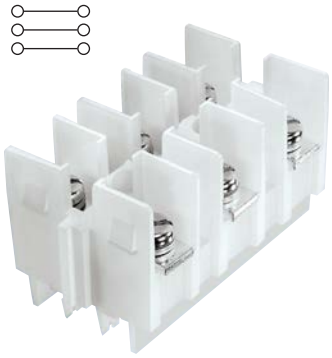

NSE3

Approval	
Technical data	
Rated voltage	600V
Rated Current	115A
Center spacing in (mm)	1.06 / 26.92
Conductor cross-section, flexible (AWG/mm²)	Ring terminals only
Number of Poles	3
Circuits per foot	11
Torque(N•m)	3.6
Torque(lb-in)	32
Screw	1/4 - 28
WxHxD(mm)	79.2 x 38.9 x 445
Colors	**Cat. no.**
○ White (standard)	NSE3-WH
—	—
Accessories	**Cat. no.**
2 circuits	JNSE3
	MT12-1-2
Panel mount C-Rail	— NFTA Series NRA Series
Dimensions — in (mm)	

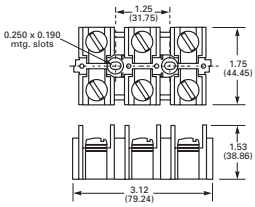

NSS3

Approval	
Technical data	
Rated voltage	600V
Rated Current	30A
Center spacing in (mm)	0.385 / 9.77
Conductor cross-section, flexible (AWG/mm²)	Ring terminals only
Number of Poles	3
Circuits per foot	28
Torque(N•m)	1.4
Torque(lb-in)	12
Screw	#6-32
WxHxD(mm)	31.5 x 33.7 x 31.8
Colors	**Cat. no.**
○ White (standard)	NSS3-WH
—	—
Accessories	**Cat. no.**
2 circuits	JNSS3
	MT12-1-2
Panel mount C-Rail	— NFTA NRA
Dimensions — in (mm)	

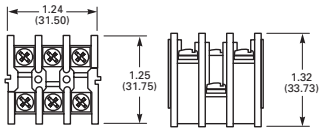

DIN-Rail depluggable blocks

Depluggable terminal blocks are available for both 35mm DIN-Rail and C-Rail applications. These blocks provide a simple depluggable* option for panel wiring applications with the convenience of quick, easy, snap-on installation. Product accessories such as jumpers and marking tape are available for most products.

UL E62622

CSA File 15364

CSA File 47235 (15188 Series)

* Not for use as a load break disconnect.

15188

PLU3

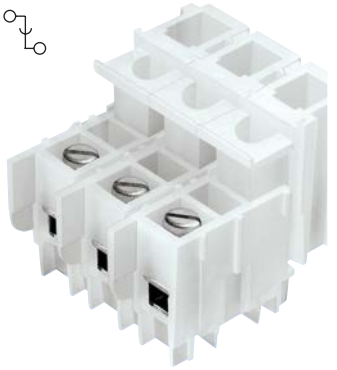

PLU1

Approval			
Technical data			
Rated voltage	600V	600V	600V
Rated Current	30A	40A	70A
Center spacing in (mm)	0.375 / 9.52	0.39 / 9.91	0.3 / 7.62
Conductor cross-section, flexible (AWG/mm²)	16~12 / 1.3~3.3	22~8 / 0.3~8.4	18~4 / 0.8~21.2
Number of Poles	3 or 4	3	1 - 3
Circuits per foot	32	28	19
Torque(N•m)	1.4	2	3.6
Torque(lb-in)	12	18	32
Screw	#6-32	#8-32	1/4 - 28
	WxHxD(mm)	WxHxD(mm)	WxHxD(mm)
3-Pole	30.2 x 49.3 x 47.8	31.8 x 47.0 x 45.6	18.5 x 47.0 x 45.6
4-Pole	39.2 x 49.3 x 47.8		34.0 x 47.0 x 45.6
			49.5 x 47.0 x 45.6
Colors	**Cat. no.**	**Colors**	**Cat. no.**	**Colors**	**Cat. no.**
Block ○ White (standard)	15188-3	○ White (standard)	PLU3-WH	○ White (1-Pole)	PLU1-WH
○ White (standard)	15188-4	● Black	PLU3-BK	○ White (2-Pole)	PLU11-WH
				○ White (3-Pole)	PLU111-WH
Accessories	**Cat. no.**	**Accessories**	**Cat. no.**	**Accessories**	**Cat. no.**
Jumper 2 circuits	15188J-2-J, J15188	2 circuits	JN3	2 circuits	JN1
Marking tape —	—		MT12-1-2		MT12-1-2
Mounting 35mm DIN-Rail	DRL35MMLO DRL35MMHI	C-Rail (AL)	NFTA NRA	C-Rail (AL)	NFTA NRA
Configurable Option Reverse Wiring	15188-_R				
Locking	15188-_S				
Reverse; Locking	15188-_RS	—	—	—	—
Options offered for both pole lengths					

Dimensions — in (mm)

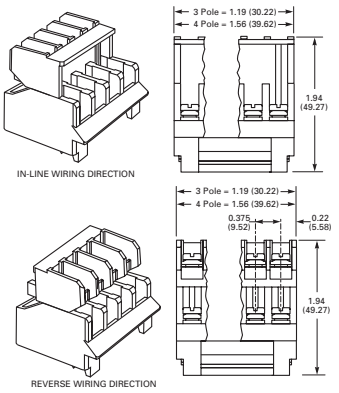

Dimensions — in (mm)

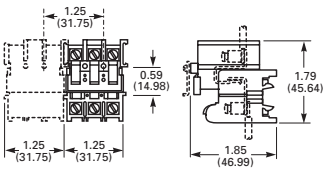

Dimensions — in (mm)

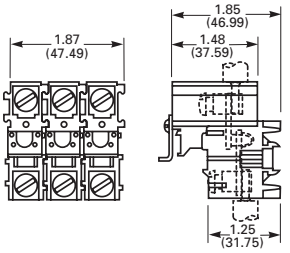

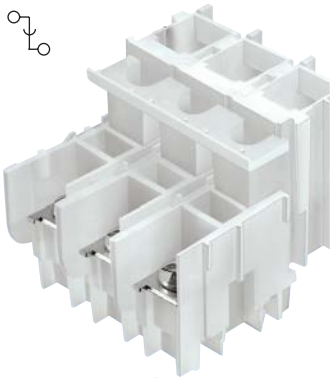

PSU1

Panel mount multi-pole blocks

Multi-pole panel mount terminal blocks provide a compact, high density circuit connection solution without the necessity of a mounting rail. These products are designed to be nested together to form one string of circuit connections.

UL E62622

CSA 15364

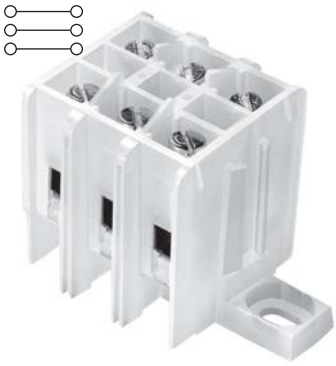

KT3

KT4

Approval	
Technical data	
Rated voltage	600V
Rated Current	45A
Center spacing in (mm)	0.625 / 15.88
Conductor cross-section, flexible (AWG/mm²)	Ring terminals only
Number of Poles	1 - 3
Circuits per foot	19
Torque(N•m)	2.7
Torque(lb-in)	24
Screw	#10-32
3-Pole	WxHxD(mm) 50.3 x 49.1 x 62.1
Colors	**Cat. no.**
Block	
○ White (3-Pole)	PSU111-WH
Accessories	**Cat. no.**
Jumper	—
Marking tape	MT12-1-2
Mounting	C-Rail (AL) NFTA NRA
—	—
Dimensions — in (mm)	

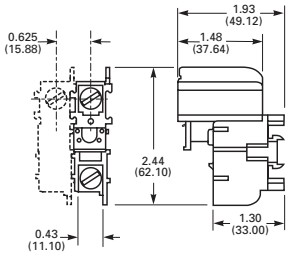

Approval	
Technical data	
Rated voltage	600V
Rated Current	40A
Center spacing in (mm)	0.39 / 9.91
Conductor cross-section, flexible (AWG/mm²)	22~8 / 0.3~8.4
Number of Poles	3
Circuits per foot	28
Torque(N•m)	2
Torque(lb-in)	18
Screw	#8-32
WxHxD(mm)	59.5 x 31.8 x 31.0
Colors	**Cat. no.**
○ White (standard)	KT3-WH
Accessories	**Cat. no.**
2 circuits	JN3
	MT12-1-2
Panel mount • Mounting foot	— KAD
Dimensions — in (mm)	

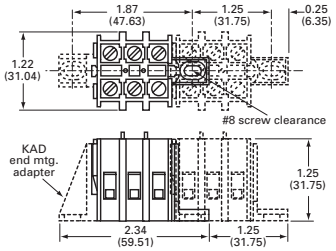

Approval	
Technical data	
Rated voltage	600V
Rated Current	30A
Center spacing in (mm)	0.25 / 6.35
Conductor cross-section, flexible (AWG/mm²)	22~10 / 0.3~5.3
Number of Poles	4
Circuits per foot	48
Torque(N•m)	2
Torque(lb-in)	18
Screw	#6-32
WxHxD(mm)	43.8 x 34.0 x 32.2
Colors	**Cat. no.**
○ White	KT4-WH-A*
○ White	KT4-WH-B*
Accessories	**Cat. no.**
4 circuits	JN4
	MTC6
Panel mount	—
Dimensions — in (mm)	

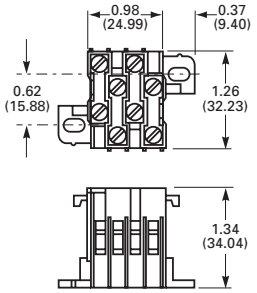

* The KT4 products are designed to be nested together to form one string of circuit connectors. When used in series, order catalog numbers KT4-WH-A and KT4-WH-B.

Panel mount quick-connect blocks

A time saving alternative for electrical connections, the Bussmann series quick-connect terminal blocks offer a convenient solution. With male spade terminals, wire connections are made quickly and simply with these terminal blocks.

UL E62622

CSA 15364

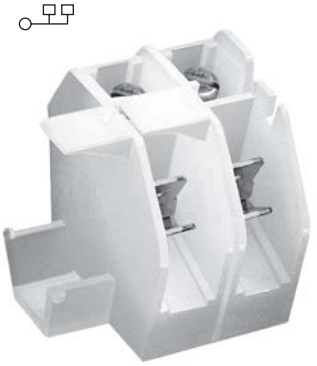

BNQ21

BQQ41

Approval	
Technical data	
Rated voltage	600V
Rated Current	40A
Center spacing in (mm)	0.437 / 11.1
Conductor cross-section, flexible (AWG/mm²)	22~8 / 0.3~8.4
Number of Poles	1
Circuits per foot	24
Torque(N•m)	2
Torque(lb-in)	18
Screw	#8-32
WxHxD(mm)	33.3 x 35.8 x 37.3
Colors	**Cat. no.**
Block ○ White (standard)	BNQ21-WH
Accessories	**Cat. no.**
—	—
Mounting: Panel mount	—
Mounting: • Mounting foot	BQE
Dimensions — in (mm)	

Approval	
Technical data	
Rated voltage	600V
Rated Current	30A
Center spacing in (mm)	0.437 / 11.1
Conductor cross-section, flexible (AWG/mm²)	0.25" Quick-connect terminals only
Number of Poles	1
Circuits per foot	24
Torque(N•m)	NA
Torque(lb-in)	NA
Screw	NA
WxHxD(mm)	33.3 x 35.8 x 37.3
Colors	**Cat. no.**
Block ○ White (standard)	BQQ41-WH
Accessories	**Cat. no.**
—	—
Mounting: Panel mount	—
Mounting: • Mounting foot	BQE
Dimensions — in (mm)	

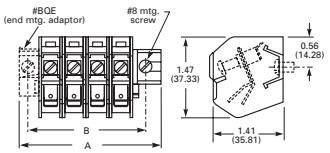

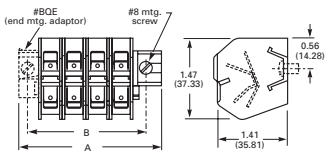

C7021 power feed through terminal blocks

Power feed through terminal block with two rows 1/4-20 studs capable of accommodating the industry standard two-hole compression lugs on both studs in parallel.

Ratings

- Volts 300 V
- Amps 115/175 A* per pole

* 175 achieved using both studs in parallel, 115 A using a single stud per line.

Agency information

- cURus, Guides XCFR2, XCFR8, File E62622
- CE

Specifications

- Poles: 1- to 6
- Wire range: AWG #3/0-8
- Center spacing: 0.69" (18mm)
- Bolt hole spacing: 0.625" or 5/8" (16mm)
- Stud: Standard 1/4-20 stud (tin-plated brass) or optional M6 stud.
- Mounting: #6 thread cutting screws (not included) or optional mounting ends.
- Torque: 36 lb-in.
- Operating temperature: 130°C (266°F) max.

Typical applications

- Applications requiring up to 175 A utilizing a 2-hole compression lug on 5/8" centers
- Input/output block for telecommunications power panels
- To eliminate busbars

Dimensions — mm (in)

With mounting ends

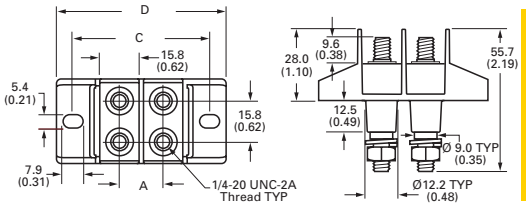

Without mounting ends

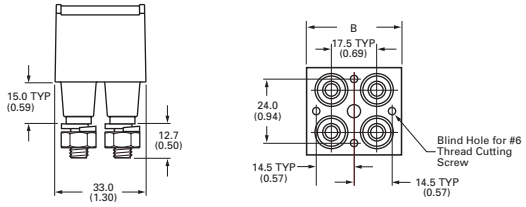

Panel cutouts

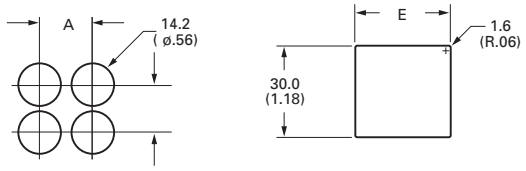

Catalog no.	A	B	C	D	E
C7021-01-X with mounting ends					
C7021-02-X	17.5 (0.69)	—	54.4 (2.14)	67.3 (2.65)	31.8 (1.25)
C7021-03-X	34.9 (1.37)	—	70.9 (2.83)	84.8 (3.34)	49.2 (1.94)
C7021-04-X	52.3 (2.06)	—	89.3 (3.52)	102.2 (4.02)	66.7 (2.63)
C7021-05-X	69.8 (2.75)	—	106.8 (4.20)	119.7 (4.71)	84.2 (3.31)
C7021-06-X	87.2 (3.44)	—	124.2 (4.89)	134.1 (5.40)	101.7 (4.00)
C7021-01N-X without mounting ends					
C7021-02N-X	17.5 (0.69)	36.1 (1.42)	—	—	31.8 (1.25)
C7021-03N-X	34.9 (0.69)	53.5 (2.11)	—	—	49.2 (1.94)
C7021-04N-X	52.3 (2.06)	71.0 (2.80)	—	—	66.7 (2.63)
C7021-05N-X	69.8 (2.75)	88.4 (3.48)	—	—	84.2 (3.31)
C7021-06N-X	87.2 (3.44)	105.9 (4.17)	—	—	101.7 (4.00)

Catalog number build-a-code

Symbol	Poles	Mount ends	Studs		Hardware
C7021				—	
	01 = 1-pole (2 studs)	**Blank** = Mount ends	**Blank** = Standard		**Blank** = No hardware
	02 = 2-pole (4 studs)	**N** = No mount ends	**M6** = M6 studs		**0** = Bulk pack, one set
	03 = 3-pole (6 studs)				**1** = Bulk pack, two sets
	04 = 4-pole (8 studs)				**2** = Assembled, bottom
	05 = 5-pole (10 studs)				**3** = Assembled, top
	06 = 6-pole (12 studs)				**4** = Assembled, both sets

TB100 double row terminal blocks

Ratings*

- 300 V
- 30 A
- Breakdown voltage: 3600 V

* Maximum rating shown; some options may be rated lower.

TB100-08

TB100-04SP

Agency information

- UL File E62622/CSA File 47235; IEC Compliance

Specifications

- Poles: 2 to 36
- Center spacing: 0.375" or 3/8" (10mm)
- Wire range: 14-22 AWG Cu
- Screw size: #6-32 phil-slot screws
- Torque rating: 9 lb-in
- Distance between barriers: 0.30" (8mm)
- Mounting: #6 screws
- Operating temperature: -40°C to 130°C (-40°F to 266°F)

Materials

- Molded black thermoplastic base, UL rated 94V0
- Tin-plated brass terminals
- Zinc-plated steel screws

Dimensions — in

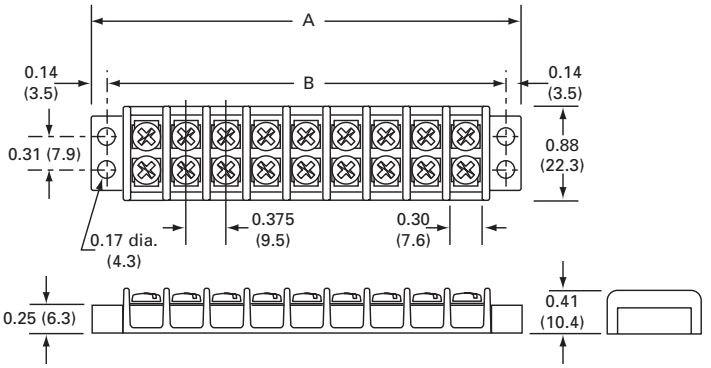

Poles	A	B	Poles	A	B	Poles	A	B
02	1.40	1.12	14	5.90	5.62	26	10.40	10.12
03	1.78	1.50	15	6.28	6.00	27	10.78	10.50
04	2.16	1.88	16	6.66	6.38	28	11.16	10.88
05	2.53	2.25	17	7.03	6.75	29	11.53	11.25
06	2.90	2.62	18	7.40	7.12	30	11.90	11.62
07	3.28	3.00	19	7.78	7.50	31	12.28	12.00
08	3.66	3.38	20	8.16	7.88	32	12.66	12.38
09	4.03	3.75	21	8.53	8.25	33	13.03	12.75
10	4.40	4.12	22	8.90	8.62	34	13.40	13.12
11	4.78	4.50	23	9.28	9.00	35	13.78	13.50
12	5.16	4.88	24	9.66	9.38	36	14.16	13.88
13	5.53	5.25	25	10.03	9.75			

1" = 25.4mm.

Catalog number build-a-code

Symbol		Poles	Screw options	Marking/cover	Hardware options
TB100	—				
		02 to **36**	**Blank** = steel phil-slot, zinc-plated	**L1** to **L6**	**QC1** to **QC20** = Quick-connects
			00 = screws shipped bulk	Marking options, see page 10-16	Custom options†
			B = brass phil-slot, nickel-plated	Special markings†, see page 10-16	**J101** = flat slip-on jumper (2 position only)
			SP = steel SEMS phil-slot, zinc-plated		**0J2** = over barrier jumpers
					0J4 = over barrier jumpers

† Contact factory for configuration.

Accessories

- Marker strips, see page 10-17
- Covers, see page 10-16

Screw options

B

Brass phil-slot, nickel-plated
F502-J (bulk)

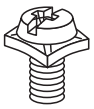

SP

Steel SEMS phil-slot, zinc-plated
B001-7021-J (bulk)

Hardware options

Quick-connects — assembled: 0.187" x 0.020" terminals, 13 amps maximum. For other orientations, contact factory.

QC1

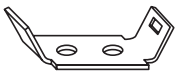

QC2

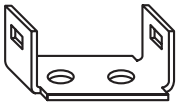

QC3

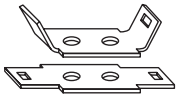

QC4

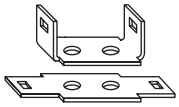

QC5

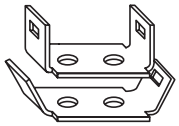

QC6

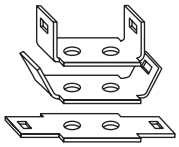

QC7

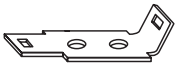

QC8

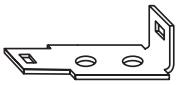

QC9

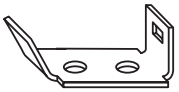

QC10

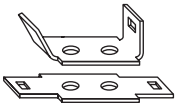

QC11

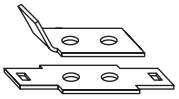

QC12

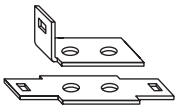

QC13

QC14

QC15

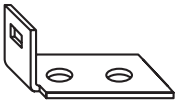

QC16

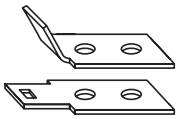

QC17

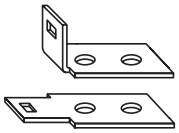

QC18

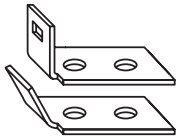

QC19

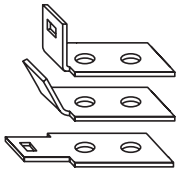

QC20

Quick-connects — bulk: minimum order 100 pieces per catalog number.

QC101-J
Flat — none

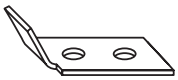

QC102-J
QC 45° — none

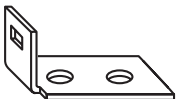

QC103-J
QC 90° — none

QC104-J
Flat — Flat

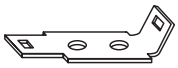

QC105-J
Flat — QC 45°

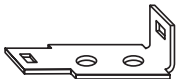

QC106-J
Flat — QC 90°

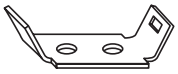

QC107-J
QC 45° — QC 45°

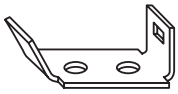

QC108-J
QC 45° — QC 90°

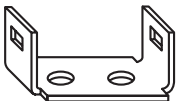

QC109-J
QC 90° — QC90°

Jumpers — bulk: minimum order 100 pieces per catalog number. Contact factory for jumper assembly.

J101
Flat slip-on (bulk: **J101-J**)

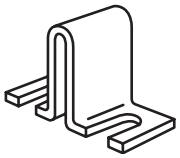

OJ2
Slip-on over barrier (bulk: **OJ2-J**)

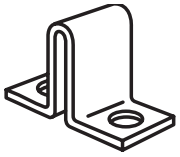

OJ4
Closed over barrier (bulk: **OJ4-J**)

TB200 and TB200HB double row terminal blocks

Ratings*

- Volts
  - 300 V (TB200)
  - 600 V (TB200HB)
- Amps 30 A
- Breakdown voltage 4800 V

* Maximum rating shown; some options may be rated lower.

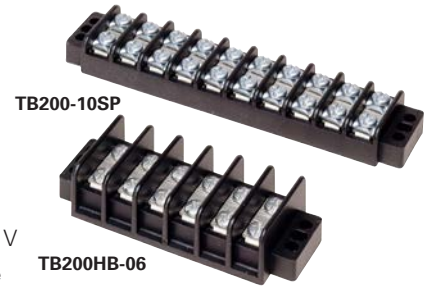

Agency information

- UL File E62622, CSA File 47235 and 15364; IEC Compliance

Specifications

- Poles: 2 to 30
- Wire range: 12 - 22 AWG Cu
- Center spacing: 0.437" or 7/16" (11mm)
- Distance between barriers: 0.353" (9mm)
- Screw size: #6-32 phil-slot screws
- Torque rating: 9 lb-in
- Mounting: #6 screws
- Operating temperature: -40°C to 130°C (-40°F to 266°F)

Materials

- Molded black thermoplastic base UL rated 94V0
- Terminal plating: Tin-plated brass terminals
- Zinc-plated steel screws

Dimensions — in

TB200

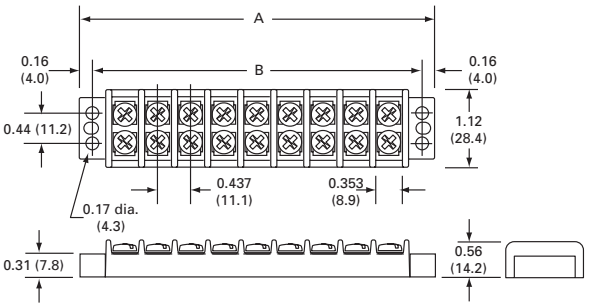

TB200HB

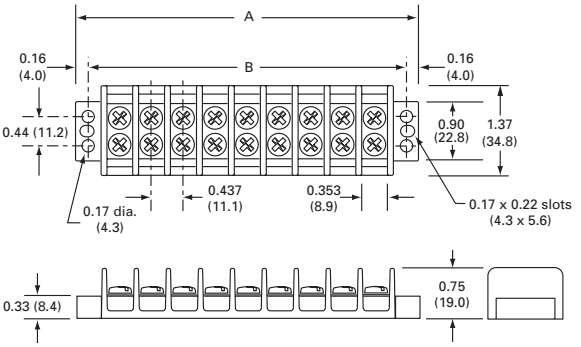

Poles	A	B	Poles	A	B	Poles	A	B
02	1.63	1.31	12	6.00	5.68	22	10.37	10.06
03	2.07	1.75	13	6.44	6.12	23	10.81	10.50
04	2.51	2.18	14	6.87	6.56	24	11.25	10.93
05	2.94	2.62	15	7.31	7.00	25	11.68	11.37
06	3.38	3.06	16	7.75	7.43	26	12.12	11.81
07	3.82	3.50	17	8.19	7.87	27	12.56	12.25
08	4.25	3.93	18	8.62	8.31	28	13.00	12.68
09	4.69	4.37	19	9.06	8.75	29	13.44	13.12
10	5.13	4.81	20	9.50	9.18	30	13.87	13.56
11	5.57	5.25	21	9.94	9.62			

1" = 25.4mm.

Catalog number build-a-code

Symbol	Barrier style		Poles	Screw options	Marking/cover	Hardware options
TB		—				
	200 = Standard		**02** to **30**	**Blank** = Steel phil-slot, zinc-plated	**L1** to **L6** = Marking options, see page 10-16	**QC1** to **QC20** = Quick-connects
	200HB = High barrier			**00** = Screws shipped bulk	Special markings†, see page 10-16	**Custom options†**
				B = Brass phil-slot, nickel-plated		**J201** = Flat slip-on jumper, 2 position only
				BS = Brass SEMS phil-slot, nickel-plated		**0J3** = Over barrier jumpers
				P = Steel SEMS (P-style)		**0J5** = Over barrier jumpers
				SP = Steel SEMS phil-slot, zinc-plated		**0J7** = Over barrier jumpers
				SS = Stainless steel SEMS, phil-slot		
				ST = Stainless steel, phil-slot		

† Contact factory for configuration.

Accessories

- Marker strips, see page 10-17
- Covers, see page 10-16

Screw options

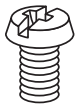

B

Brass phil-slot
nickel-plated
B001-7016-J (bulk)

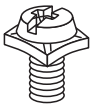

BS

Brass SEMS phil-slot
nickel-plated
B001-7019-J (bulk)

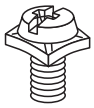

SP

Steel SEMS phil-slot
zinc-plated
B001-7007-J (bulk)

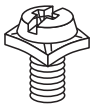

P

Steel SEMS
(P-style)
B001-7000-J (bulk)

ST

Stainless steel phil-slot
F507-J (bulk)

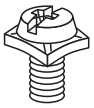

SS

Stainless steel SEMS
phil-slot
B001-7085-J (bulk)

Hardware options

Quick-connects — assembled: 0.25" x 0.031" terminals, 20 amps maximum. For other orientations, contact factory.

QC1

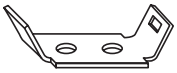

QC2

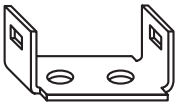

QC3

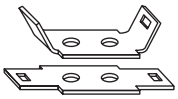

QC4

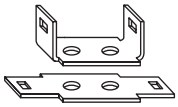

QC5

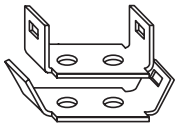

QC6

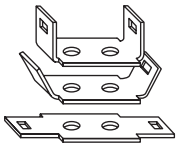

QC7

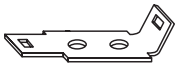

QC8

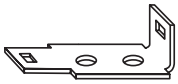

QC9

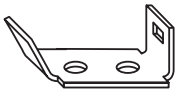

QC11

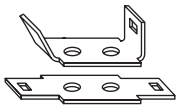

QC10

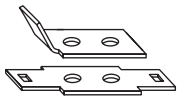

QC12

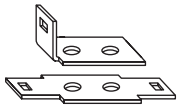

QC13

QC14

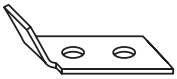

QC15

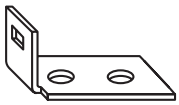

QC16

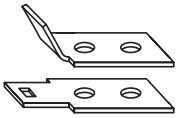

QC17

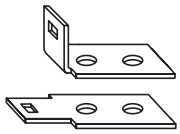

QC18

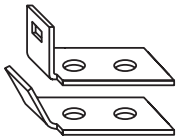

QC19

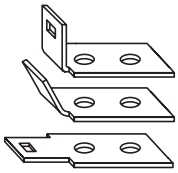

QC20

Quick-connects — bulk: minimum order 100 pieces per catalog number.

QC201-J

QC 45° — blank

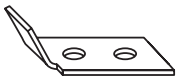

QC202-J

Flat — blank

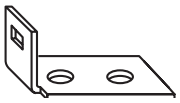

QC203-J

QC 90° — blank

QC204-J

Flat — Flat

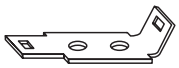

QC205-J

Flat — QC 45°

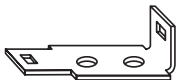

QC206-J

Flat — QC 90°

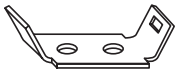

QC207-J

QC 45° — QC 45°

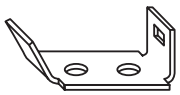

QC208-J

QC 45° — QC 90°

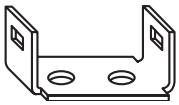

QC209-J

QC 90° — QC 90°

Jumpers — bulk: minimum. order 100 pieces per catalog number. Contact factory for jumper assembly.

J201

Flat slip-on
(not available on TB200HB)
J201-J (bulk)

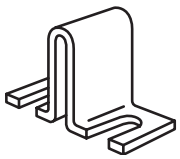

OJ3

Slip-on over barrier for TB200HB
OJ3-J (bulk)

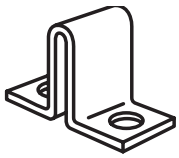

OJ5

Closed over barrier for TB200HB
OJ5-J (bulk)

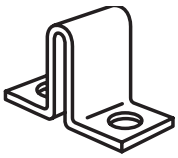

OJ7

Closed over barrier for TB200
OJ7-J (bulk)

TB300 and TB345 double row terminal blocks

Ratings*

- Volts 600 V
- Amps
  - 30 A (TB300)
  - 45 A (TB345)
- Breakdown voltage 7500 V

* Maximum rating shown; some options may be rated lower.

Agency information

UL File E62622, CSA File 47235; IEC Compliance

Specifications

- Poles: 2 to 24
- Wire range: 8 - 22 AWG Cu
- Center spacing: 0.562" or 9/16" (14mm)
- Screw size
  - TB300 — #8-32 phil-slot screws
  - TB345 — #10-32 phil-slot screws
- Torque rating
  - #8 screws - 16 lb-in
  - #10 screws - 20 lb-in
- Distance between barriers: 0.41" (10mm)
- Mounting
  - TB300 — #8 screws
  - TB345 — #10 screws
- Operating temperature: -40°C to 130°C (-40°F to 266°F)

Materials

- Molded black thermoplastic base, UL rated 94V0
- Tin-plated brass terminals
- Zinc-plated steel screws

Dimensions — in

TB300 and TB345

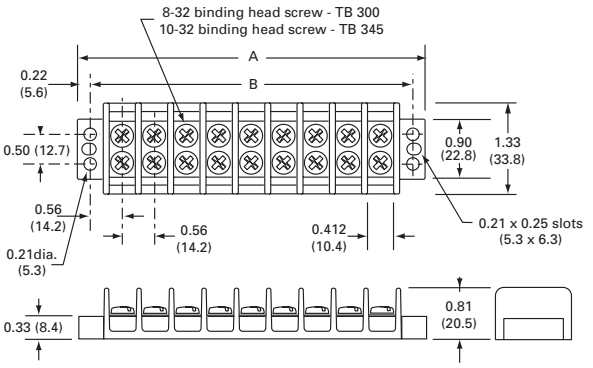

Poles	A	B	Poles	A	B	Poles	A	B
02	2.13	1.69	10	6.62	6.19	18	11.12	10.68
03	2.69	2.25	11	7.18	6.75	19	11.68	11.25
04	3.25	2.81	12	7.75	7.31	20	12.24	11.81
05	3.81	3.37	13	8.31	7.87	21	12.80	12.37
06	4.37	3.94	14	8.87	8.44	22	13.37	12.93
07	4.94	4.50	15	9.43	9.00	23	13.93	13.50
08	5.50	5.06	16	9.99	9.56	24	14.49	14.06
09	6.06	5.62	17	10.56	10.12			

1" = 25.4mm.

Catalog number build-a-code

Symbol	Screw size		Poles	Screw options	Marking/cover	Hardware options
TB		—				
	300 = 8-32 screw		**02** to **24**	**Blank** = Steel phil-slot, zinc-plated	**L1** to **L6** marking options, see page 10-16	**QC1** to **QC20** = Quick-connects (TB300 only)
	345 = 10-32 screw			**00** = Screws shipped bulk	Special markings†, see page 10-16	**Custom options (TB300 only)†**
				B = Brass phil-slot, nickel-plated		**J301** = Flat slip-on jumper
				BS = Brass SEMS phil-slot, nickel-plated (TB300 only)		**OJ6** = Over barrier jumper
				SP = Steel SEMS phil-slot, zinc-plated		**OJ11** = Over barrier jumper
				ST = Stainless steel, phil-slot		

† Contact factory for configuration.

Accessories

- Marker strips, see page 10-17
- Covers, see page 10-16

Screw options

B

Brass phil-slot nickel-plated
- **B001-7018-J** (TB300 bulk)
- **B500-023-028-J** (TB345 bulk)

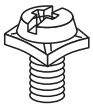

BS

Brass SEMS phil-slot nickel-plated
- **B001-7015-J** (TB300 bulk)

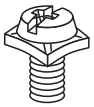

SP

Steel SEMS phil-slot zinc-plated
- **B001-7017-J** (TB300 bulk)
- **B001-5774-J** (TB346 bulk)

ST

Stainless steel phil-slot
- **B001-7063-J** (TB300 bulk)
- **B001-7064-J** (TB345 bulk)

Hardware options

Quick-connects — assembled: TB300 only; 0.25" x 0.031" terminals, 20 amps maximum. For other orientations, contact factory.

QC1

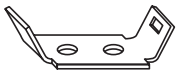

QC2

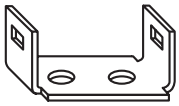

QC3

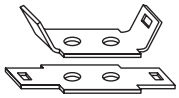

QC4

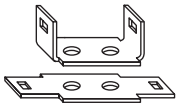

QC5

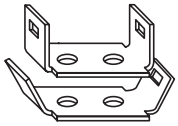

QC6

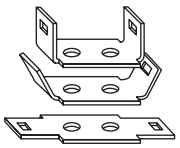

QC7

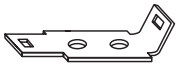

QC8

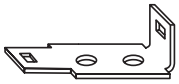

QC9

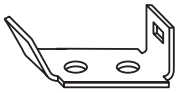

QC10

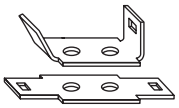

QC11

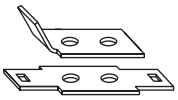

QC12

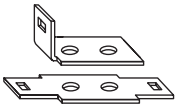

QC13

QC14

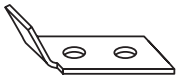

QC15

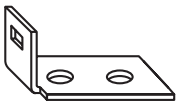

QC16

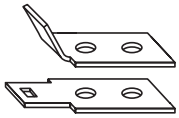

QC17

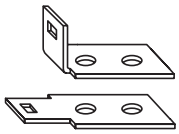

QC18

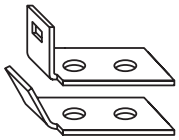

QC19

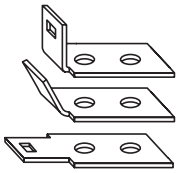

QC20

Quick-connects — bulk: *TB300 only; minimum order 100 pieces per catalog number.

QC201-J

Flat — blank

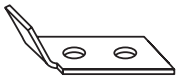

QC202-J

QC 45° — blank

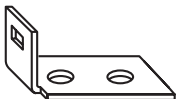

QC203-J

QC 90° — blank

QC204-J

Flat — Flat

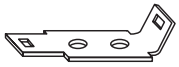

QC205-J

Flat — QC 45°

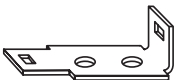

QC206-J

Flat — QC 90°

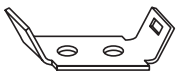

QC207-J

QC 45° — QC 45°

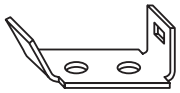

QC208-J

QC 45° — QC 90°

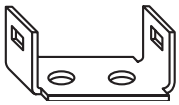

QC209-J

QC 90° — QC 90°

Jumpers — bulk: TB300 only; minimum order 100 pieces per catalog number. Contact factory for jumper assembly.

J301

Flat slip-on
J301-J (bulk)

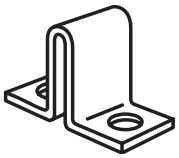

OJ6

Closed over barrier
OJ6-J (bulk)

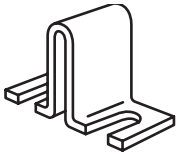

OJ11

Slip-on over barrier
OJ11-J (bulk)

Marking options and covers for double row terminal blocks

Standard marking

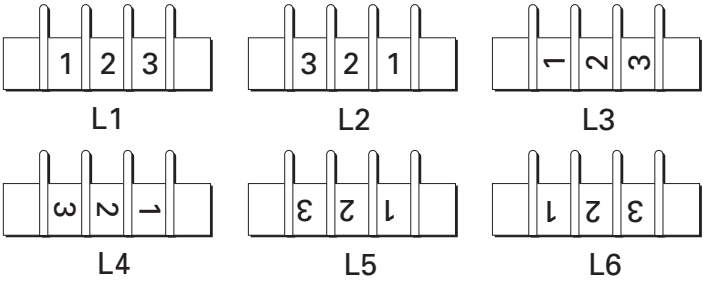

Standard markings are applied directly to the side(s) of a block. The standard marking color is white. The standard numeral height is 0.125 inches (3mm).

Note: Blocks marked on both sides require a different code for each side. Example: Style L1 on one side of the block requires Style L2 on the other side to ensure common terminal marking. To order, add appropriate suffix (L1, L2, L3, L4, L5 and/or L6) to block catalog number in the proper sequence.

Special marking*

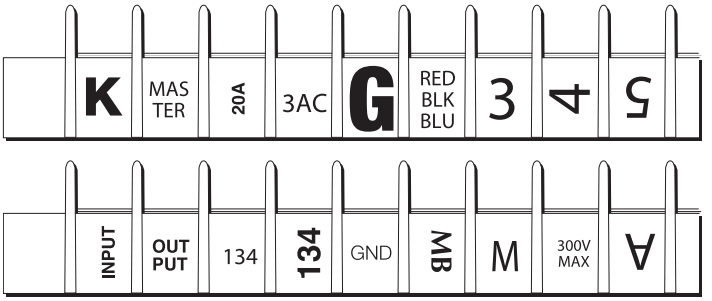

Special markings are available at an additional charge. Drawing(s) must be submitted to ensure accuracy of part required. Consult factory for price and delivery.

* Not available on TB400 products

Covers

(must be ordered separately)

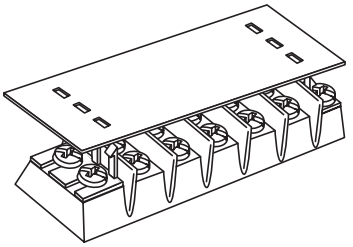

Covers prevent personnel, screws and foreign items from contacting live terminals, and are available in white (opaque) or clear plastic. Two cover clips are supplied with each cover. The cover width is 1.31 inches (33mm). Example: 10 position cover, white, TB100 = catalog number X12010.

Cover catalog number build-a-code†

Symbol	Cover strip†	Poles	High barrier option only
X			
	119 = TB100 - clear	**02** to **36** (TB100)	**HB** = High barrier††
	120 = TB100 - white	**02** to **30** (TB200/TB200HB)	
	219 = TB200/TB200HB - clear	**02** to **24** (TB300/TB345)	
	220 = TB200/TB200HB - white		
	319 = TB300/TB345 - clear		
	320 = TB300/TB345 - white		

† Cover strip not available for TB400 products.
††Applicable to X219 and X220 only.

Cover clips — bulk

Catalog no.	For block family
DD1-J	TB100
DD2-J	TB200
DD2HB-J	TB200HB
DD3-J	TB300

Top marker strips

(order separately from blocks)

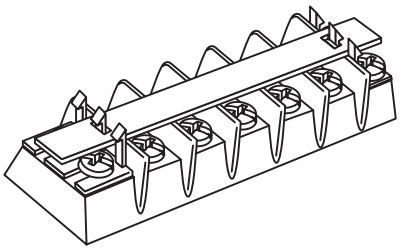

Top mounting marker strips must be ordered separately and are only available in white (opaque) plastic. Two cover clips are supplied with each marker strip.

Example: 12 position cover, TB200, 0.032" x 0.312" = catalog number X20312.

Example: 12 position cover, TB200HB, 0.06" x 0.50" = catalog number X23312HB.

Top marker strip catalog number build-a-code

Series	Top marker strip†	Poles	High barrier option only
X			
	103 = TB100 (0.032 thk x 0.312 w)	**02** to **36** (TB100)	**HB** = High barrier††
	133 = TB100 (0.060 thk x 0.500 w)	**02** to **30** (TB200/TB200HB)	
	203 = TB200/TB200HB (0.032 thk x 0.312 w)	**02** to **24** (TB300/TB345)	
	233 = TB200/TB200HB (0.060 thk x 0.500 w)		
	303 = TB300/TB345 (0.032 thk x 0.380 w)		
	333 = TB300/TB345 (0.060 thk x 0.500 w)		

† Marking strips not available for TB400 products
††Applicable to X203 and X233 only.

Bottom marker strips

(order separately from blocks)

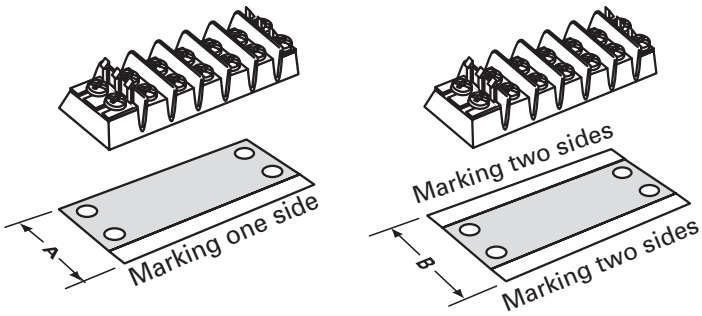

Bottom mounting marker strips are made of 0.03" thick black PVC. Space is available along the edge to handle most marking needs. All marker strips must be ordered separately.

To order, specify catalog number and required marking orientation. Example: 13 position strip, TB100 with no markings, space for marking one side = catalog number X10513. Consult factory for specials.

Standard numeral height is 0.125". Standard markings are 0-99. Special markings are available on special order. Drawing(s) must be submitted to ensure accuracy of part required.

Dimensions — in

	For TB block					
Dim.	TB100	TB200	TB200HB	TB300	TB345	TB400
A	1.13	1.37	1.62	1.58	1.58	N/A
B	1.38	1.62	1.81	1.81	1.81	N/A

Bottom marker strip catalog number build-a-code

Symbol	Bottom Marker Strip†	Poles	Marking orientation
X			
	101 = TB100 marking both sides	**02** to **36** (TB100)	**BF** = Bottom forward
	105 = TB100 marking one side	**02** to **30** (TB200/TB200HB)	**BR** = Bottom reverse
	201 = TB200 marking both sides	**02** to **24** (TB300/TB345)	**TF** = Top forward
	205 = TB200 marking one side		**TR** = Top reverse
	291 = TB200HB marking both sides		
	295 = TB200HB marking one side		
	301 = TB300 and TB345 marking both sides		
	305 = TB300 and TB345 marking one side		

† Not available for TB400 products.

TB400 double row terminal blocks

Ratings

TB400-05

- Volts 600 V
- Amps 75 A
- Breakdown voltage 7500 V

Agency information

- UL File E62622, CSA File 47235; IEC Compliance

Specifications

- Poles: 2 to 12
- Wire range: 6-14 AWG Cu
- Center spacing: 0.687" or 11/16" (17mm)
- Distance between barriers: 0.56" (14mm)
- Screw size: #10-32 phil-slot screws
- Torque rating: 20 lb-in
- Mounting: #10 screws
- Operating temperature: -40°C to 130°C (-40°F to 266°F)

Materials

- Molded black thermoplastic base, UL rated 94V0
- Tin-plated brass terminals
- Zinc-plated steel screws

Dimensions — in

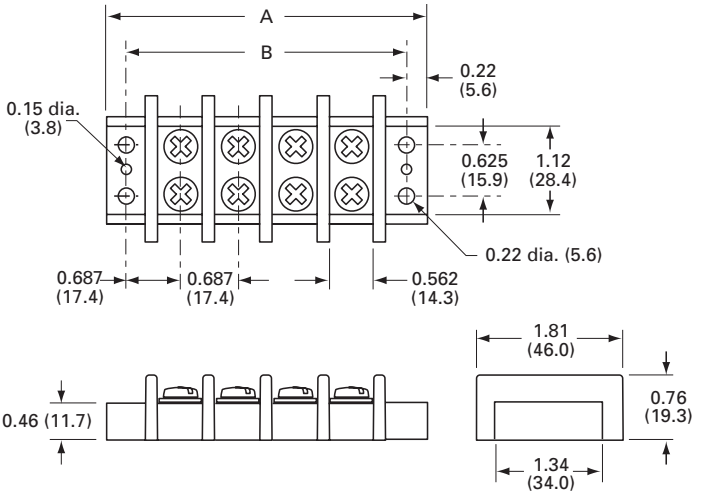

Poles	A	B	Poles	A	B	Poles	A	B
02	2.51	2.06	06	5.26	4.81	10	8.01	7.56
03	3.20	2.75	07	5.95	5.50	11	8.70	8.25
04	3.89	3.44	08	6.64	6.19	12	9.39	8.94
05	4.58	4.13	09	7.33	6.88			

1" = 25.4mm.

Screw options

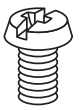
Brass nickel-plated phil-slot
B500-023-028-J (bulk)

Stainless steel phil-slot
B001-7064-J (bulk)

Hardware options

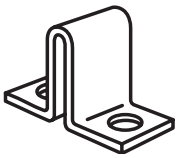
OJ14: Closed over barrier
OJ14-J (bulk)

Catalog number build-a-code

Symbol		Poles	Screw options
TB400	—		
		02 to **12**	**Blank** = Zinc-plated steel phil-slot
			00 = Screws shipped bulk
			B = Nickel-plated brass phil-slot
			ST = Stainless steel, phil-slot

Accessories

- **OJ14** - Jumper over barrier, consult factory for pole configuration

KU double row terminal blocks

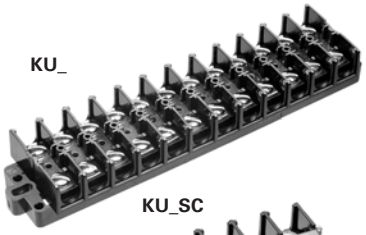

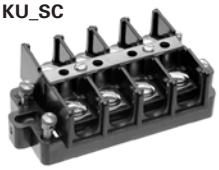

Ratings

- Volts 600 V
- Amps 60 A*

* 60 A rating achieved with 6 AWG Cu wire crimped to ring terminal.

Agency information

- UL File E62622, CSA File 47235

Specifications

- Poles: 2 to 12
- Wire range: 6-22 AWG Cu
- Center spacing: 0.625" (16mm)
- Screw size: #10-32
- Torque rating: 20 lb-in
- Distance between barriers: 0.437" (11mm)
- Mounting: Panel mount
- Operating temperature: 105°C (221°F) max.

Materials

- Molded black Noryl base, UL rated 94V1
- Terminal plating: Nickel-plated brass terminals
- Zinc-plated steel screws

Dimensions — in

	KU		KUX only
Poles	A	B	A
02	2.50	1.62	2.00
04	3.75	2.87	3.25
06	5.00	4.12	4.50
08	6.25	5.37	5.75
10	7.50	6.62	7.00
12	8.75	7.87	8.25

1" = 25.4mm.

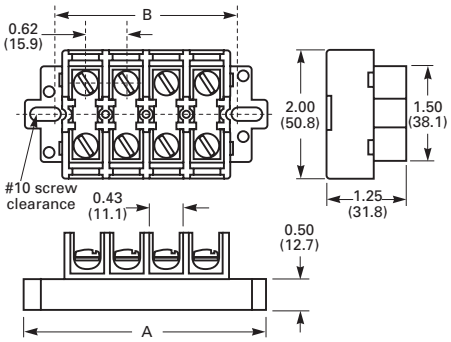

Accessories (order separately)

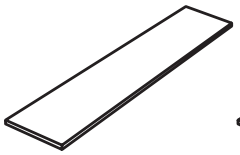

MTMU(poles)
Molded marking tape, matte finish

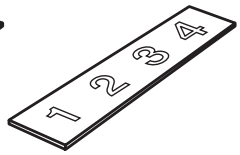

NUM(poles)
Molded marking tape

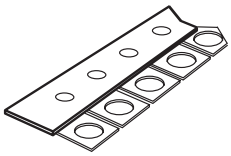

JU12
Jumper, 12 circuits

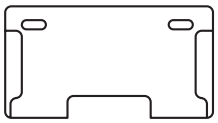

NUE
End piece for NUC

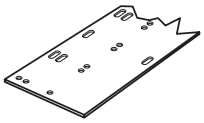

NUC(poles)
Cover

Catalog number build-a-code - KU versions

Symbol / for	Poles		Screw options	Covers	Marking strip
		—			
KU / Standard block	**2** **4** **6** **8** **10** **12**		**00** = Screws shipped bulk	**WC** = Top cover and2 end plates	**MT** = Matte finish
KUX / Short block			**BP** = Brass phil-slot, nickel-plated		**NU** = Numbered 1 to 12, horizontal
KURL / Standard w/removable link			**P** = Steel screw w/pressure plate zinc-plated		**NUV** = Numbered 1 to 12, vertical
KUXRL / Short block w/removable link			**W** = Brass washer head, nickel-plated		**PT** = Marker strip for cover†

Catalog number build-a-code - KU__SC versions

Symbol / for	Poles		Screw options	Covers	Marking strip
		—			
KUSC / Standard w/shorting strap and 4 shorting screws	**2** **4** **6** **8** **10** **12**		**00** = Screws shipped bulk	**WC** = Top cover and 2 end plates	**PT** = Marker strip for cover†
KUXSC / Short block w/shorting strap and 4 shorting screws			**BP** = Brass phil-slot, nickel-plated		
			P = Steel screw w/pressure plate, zinc-plated		
			W = Brass washer head, nickel-plated		

† Requires WC cover option

End brackets

BRKT-ND

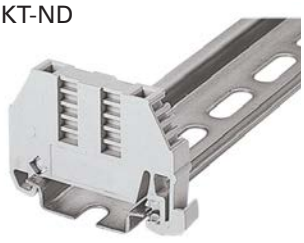

Use with DRL35MMHI
DRL35MMLO

Dimensions — mm

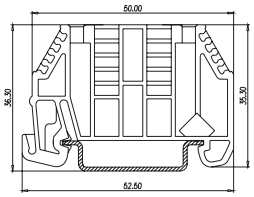

BRKT-NDSCRW

Use with DRL35MMHI
DRL35MMLO

Dimensions — mm

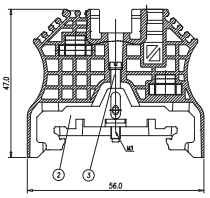

BRKT-NDSCRW2

Use with DRL35MMHI
DRL35MMLO

Dimensions — mm

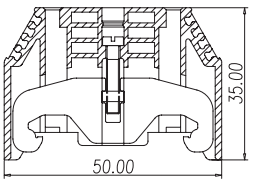

BRKT-NDSCRW3

Use with DRL35MMHI
DRL35MMLO

Dimensions — mm

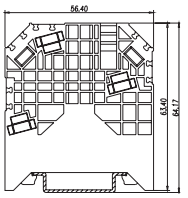

Mounting rails and brackets

DRL35MMLO*

Low profile
35mm DIN-Rail

DRL35MMHI*

High profile
35mm DIN-Rail

NFTA**

C-Rail

NRA**

C-Rail

BRKT-ANGL

Angle bracket

BRKT-FLT

Flat bracket

* Available in 1 meter lengths only.
**Cut-to-length. Consult your Bussmann series product representative for details.

The power of space

The Bussmann™ series Compact Circuit Protector for Class CF CUBEFuse™ delivers the smallest footprint compared to any Class J disconnect solution — requiring up to 51% less space.

Contents

Description	Section page
Compact Circuit Protector disconnect switches	
Class CF CUBEFuse up to 100 A (CCP2-CF)	2-8
Class CF CUBEFuse 200 and 400 A (CCP2-CF)	9-12
Accessories for CUBEFuse CCP2	13-
Multi-wire lug kits	13-14
Selector and pistol handles, shafts, NFPA 79 compliant handles	15-16
Flange handle rod and cable operators	17
200 and 400 A switch rotary mechanisms	18
Auxiliary contacts	19-20
PLC fuse monitors (up to 100 A switches)	21-22
How to order Class CF switches	23-35
Switches up to 100 A	23-30
200 and 400 A switches	32-35

Description	Section page
Compact Circuit Protector disconnect switches	
Compact Circuit Protector Base (CCP2B - CUBEFuse)	36-37
Class CC, UL supplemental and IEC 10x38 (CCP2)	38-42
Accessories for Class CC, UL supp. and IEC 10x38 CCP2	43-47
Multi-wire lug kits	43
Selector and pistol handles, shafts, NFPA 79 compliant handles	44
Auxiliary contacts	45
PLC fuse monitors	46-47
How to order Class CC, UL supplemental and IEC 10x38 switches	48-51
Low profile Class CC and G, UL supplemental and IEC 10x38 (CCPLP)	52-53
UL 98 fused disconnect switches, 30 to 800 A	
Introduction and agency information	54
Product line summary — UL	55
30 A Class CC and compact Class J	56-57
30 A standard Class J	58-59
60 A compact Class J	60-61
60 A standard Class J	62-63
100 A standard Class J	64-65
200 A and 400 A standard Class J	66-68
600 A standard Class J and 800 A Class L	69-70
UL 98 non-fused disconnect switches, 30 to 1200 A	
Introduction, agency information and IEC product summary	71
UL product summary	72
30 A, 60 A and 100 A compact	73-74
100 A, 200 A and 400 A standard	75-76
600 A, 800 A, 1000 A and 1200 A standard	77-78
UL 508 non-fused disconnect switches, 16 to 80 A	
Introduction, agency information and IEC product summary	79
UL product summary	80
16 A, 25 A, 40 A, 63 A and 80 A	81-83
Enclosed UL 98 and UL 508 disconnect switches	
Introduction and agency information	84
Fused UL 98 enclosed disconnects, 30 to 800 A	85-86
Non-fused UL 98 enclosed disconnects, 30 to 1200 A	87-88
Non-fused UL 508 enclosed disconnects, 16 to 80 A	89-90

Compact Circuit Protector

UL 98 Class CF disconnect switches from 30 to 400 A

CCP2 switch up to 100 A
with and without rotary operation mechanisms

200 A CCP2 switch
with and without rotary operation mechanisms

400 A CCP2 switch
with and without rotary operation mechanisms

Class CF CCP contents **Section page**

30, 60 and 100 amp switches
Descriptions and specifications 3-4
Catalog numbers 5
Terminal data 6
Dimensions 6-8
200 and 400 A switches
Descriptions and specifications 9-10
Catalog numbers and horsepower ratings 10
Available lugs 10
Dimensions 11-12
Accessories
Multi-wire lug kits
30, 60 and 100 A switches 13
200 and 400 A switches 14
Handles and shafts
Selector and pistol handles 15
Handle shafts 16
NFPA 79 compliant handles 16
Flange handle rod and cable operators 17
200 and 400 A switches
Front rotary mechanisms 18
Side rotary mechanisms 18
Terminal shroud kits 18
Phase barrier kits 18
Handle extension 18
Auxiliary contacts
30, 60 and 100 A switches 19
200 and 400 A switches 20
PLC fuse monitor (30, 60 and 100 A switches) 21-22
How to order
30 and 60 A switches
Switch only 23
Front and right side rotary switches 24-25
Left side rotary switches 26
100 A switches
Switch only 27
Front and right side rotary switches 28-29
Left side rotary switches 30
200 and 400 A switches
200 A switches 32-33
400 A switches 34-35

Catalog symbols for 30, 60 and 100 A switches

Symbol	Description
CCP2-(pole)-(amps)CF	Switch only
CCP2R-(pole)-(amps)CF	Right front rotary, clockwise operated switch
CCP2RL-(pole)-(amps)CF	Left front rotary, clockwise operated switch
CCP2S-(pole)-(amps)CF	Right side rotary, clockwise operated switch
CCP2SL-(pole)-(amps)CF	Left side rotary, counterclockwise operated switch

Description

The revolutionary, next generation Bussmann™ series Compact Circuit Protector (cat. no. CCP2) is a fused UL® 98 branch circuit disconnect switch utilizing the UL Class CF time-delay or fast-acting CUBEFuse™ with Class J electrical performance. With up to a 51 percent smaller footprint than a traditional fusible solution, these switches provide a high 200 kA SCCR to help improve panel and assembly SCCR.

The 35 mm DIN-Rail mount CCP2 is available in a variety of 30, 60 and 100 amp configurations to meet many application needs including rotary operation.

The switch-only versions of the 30, 60 and 100 A disconnects are direct, drop-in replacements for the earlier models (noted by a catalog number starting "CCP-"). The auxiliary contacts and PLC remote fuse indicator are backwards compatible. The multi-wire lug kits and terminal shrouds are not.

Application flexibility is extended with an optional multi-wire lug kit, featuring finger-safe shrouds, that provides three (30 and 60 A switches) and six (100 A switches) additional wire ports on each pole for power distribution applications.

Other accessories include a PLC fuse monitor for open fuse indication and NO/NC auxiliary contacts that easily integrate into various monitoring systems.

Front and side rotary operated versions are easily applied for through-the-door or through the left or right side operation to enhance safety.

Ratings

- Volts
  - 347 Vac (1-pole switches)
  - 600 Vac (2- and 3-pole switches)
  - 125 Vdc*
- Amps
  - 30 A
  - 60 A
  - 100 A
- SCCR
  - 200 kA RMS Sym.
  - 100 kA DC

Poles

- 1-, 2- and 3-poles catalog number dependent

* Switch amp rating and installed fuse amp rating dependent, see catalog number table for details.

Agency information

- UL 98 Listed, Guide WHTY, File E302370
- cULus to Canadian Standard 22.2 No. 4-04, Guide WHTY7, File E302370
- RoHS compliant
- CE

Conductors/terminals

- 75°C Cu, see conductor tables for size, type and torque information
- Box lug, single/dual conductor
- Fork terminal suitable for line, load or accessory connection, max. 30 A suitable for use with:
  - 10-24 screw for 30 and 60 A switches
  - 1/4-28 screw for 100 A switches
- Multi-wire lug kits — see accessories for details

Storage and operating temperature

- -20°C to 75°C (-4°F to 167°F)*

* For fuse performance under or above 25°C, consult fuse performance derating charts in the Bussmann Division publication no. 3002, titled Selecting Protective Devices (SPD)

Lockout/tagout provisions

- 1/4" lock, direct use on switches without rotary mechanisms requires a lock with a straight shank of sufficient length to engage all poles

Minimum enclosure size per UL 98*

- 30 and 60 A switch 10"x 8"x 6"(254 x 203 x 152 mm)
- 100 A switch, 12" x 10" x 6" (305 x 254 x 152 mm)

* Smaller enclosures may be used at the discretion of the user, with adherence to NEC minimum wire bend radius requirements.

Mounting**

- 35 mm DIN-Rail

**Switch is panel mount with flange handle cable operator.

Local open fuse indication minimum voltage

- 90 Vac, requires an open fuse to be in the CCP2 and the switch in the ON position

Accessories

- Multi-wire lug kits with terminal shrouds
- Selector and pistol handles for use with rotary operated switches
- 8 mm shafts for use with selector and pistol handles
- Auxiliary contacts
- PLC fuse monitor
- NFPA 79 compliant handle
- Flange handle rod and cable operators

Features

- Uses UL Class CF time-delay or fast-acting CUBEFuse with Class J electrical performance
- Extremely compact design at 25.4 mm (1 inch) wide per pole
- Amp rating rejection disconnects will not accept a CUBEFuse amp rating greater than switch rating
- High 200 kA short-circuit current rating
- Disconnect rated to provide means for load isolation
- Full voltage rated at 347 Vac (1-pole switches) and 600 Vac (2- and 3-pole switches)
- 125 Vdc* rated to meet specialized applications
- UL 98 Listed and suitable for branch circuit disconnect and branch circuit protection with installed fuses
- Horsepower rated
- Open fuse indication:
  - Local open fuse indication light standard on each pole
  - Optional PLC fuse monitor for wired remote open fuse indication by signaling a PLC and opening a contactor to de-energize all phases, if required
- Additional open fuse indication can be provided by the indicating time-delay CUBEFuse (6 to 100 A)
- Finger-safe construction with 10 AWG (6 mm^2) wire or larger
- Built-in switch interlock prohibits removing or installing the fuse while in the ON position
- Padlockable for lockout/tagout procedures with a 1/4″ lock
- Rotary operated versions provide for through-the-door and through-the-side operation flexibility and enhanced safety with:
  - Right or left front operation
  - Right or left side operation
- Optional selector and pistol handles, and shafts available for use with rotary operated versions
- Multi-wire lug kits with terminal shrouds allow for power distribution to multiple loads. Each lug has three (30 and 60 A switches) or six (100 A switches) ports rated for single and dual wires (see lug kits in accessories for details).

* Switch amp rating and installed fuse amp rating dependent, see catalog number table for details.

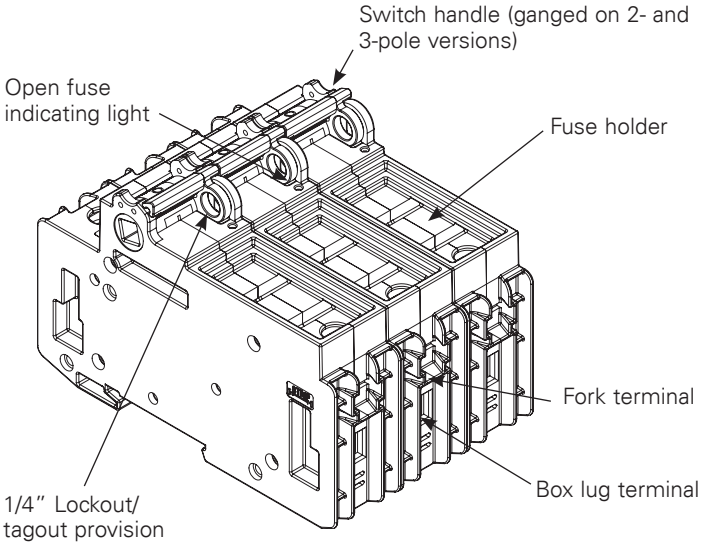

Right front rotary operated CCP2 switch with PLC fuse monitor.

Rotary operating versions

Left front
Uses clockwise handles

Right front
Uses clockwise handles

Left side
Uses counterclockwise handles

Right side
Uses clockwise handles

30, 60 and 100 A switch catalog numbers

Catalog no.	Poles	Description/switch operation	Volts	SCCR	Max Hp rating (Vac) 120	240	480	600
30 amp switches								
CCP2-1-30CF	1	Switch only	347 Vac/125 Vdc	200 kA AC 100 kA DC	1-1/2	—	—	—
CCP2-2-30CF	2		600 Vac/125 Vdc		—	3	—	—
CCP2-3-30CF	3		600 Vac		—	5	15	10
CCP2R-2-30CF	2	Right front rotary, clockwise	600 Vac/125 Vdc		—	3	—	—
CCP2R-3-30CF	3		600 Vac		—	5	15	10
CCP2RL-2-30CF	2	Left front rotary, clockwise	600 Vac/125 Vdc		—	3	—	—
CCP2RL-3-30CF	3		600 Vac		—	5	15	10
CCP2S-2-30CF	2	Right side rotary, clockwise	600 Vac/125 Vdc		—	3	—	—
CCP2S-3-30CF	3		600 Vac		—	5	15	10
CCP2SL-2-30CF	2	Left side rotary, counterclockwise	600 Vac/125 Vdc		—	3	—	—
CCP2SL-3-30CF	3		600 Vac		—	5	15	10
60 amp switches								
CCP2-1-60CF	1	Switch only	347 Vac/125 Vdc*	200 kA AC 100 kA DC	3	—	—	—
CCP2-2-60CF	2		600 Vac/125 Vdc*		—	7-1/2	—	—
CCP2-3-60CF	3		600 Vac		—	7-1/2	20	10
CCP2R-2-60CF	2	Right front rotary, clockwise	600 Vac/125 Vdc*		—	7-1/2	—	—
CCP2R-3-60CF	3		600 Vac		—	7-1/2	20	10
CCP2RL-2-60CF	2	Left front rotary, clockwise	600 Vac/125 Vdc*		—	7-1/2	—	—
CCP2RL-3-60CF	3		600 Vac		—	7-1/2	20	10
CCP2S-2-60CF	2	Right side rotary, clockwise	600 Vac/125 Vdc*		—	7-1/2	—	—
CCP2S-3-60CF	3		600 Vac		—	7-1/2	20	10
CCP2SL-2-60CF	2	Left side rotary, counterclockwise	600 Vac/125 Vdc*		—	7-1/2	—	—
CCP2SL-3-60CF	3		600 Vac		—	7-1/2	20	10
100 amp switches								
CCP2-1-100CF	1	Switch only	347 Vac/125 Vdc**	200 kA AC 100 kA DC	5	—	—	—
CCP2-2-100CF	2		600 Vac/125 Vdc**		—	10	—	—
CCP2-3-100CF	3		600 Vac		—	20	50	40
CCP2R-2-100CF	2	Right front rotary, clockwise	600 Vac/125 Vdc**		—	10	—	—
CCP2R-3-100CF	3		600 Vac		—	20	50	40
CCP2RL-2-100CF	2	Left front rotary, clockwise	600 Vac/125 Vdc**		—	10	—	—
CCP2RL-3-100CF	3		600 Vac		—	20	50	40
CCP2S-2-100CF	2	Right side rotary, clockwise	600 Vac/125 Vdc**		—	10	—	—
CCP2S-3-100CF	3		600 Vac		—	20	50	40
CCP2SL-2-100CF	2	Left side rotary, counterclockwise	600 Vac/125 Vdc**		—	10	—	—
CCP2SL-3-100CF	3		600 Vac		—	20	50	40

* 125 Vdc for installed fuse amp ratings up to 40 A. 24 Vdc for installed fuse amp ratings from 45 to 60 A.
**125 Vdc for installed fuse amp ratings up to 80 A, 24 Vdc for installed fuse amp ratings from 90 to 100 A.

Box lug terminal conductor data

Wire type	AWG range	Class	Quantity	Torque N•m (lb-in)
30 and 60 A switches				
75°C Cu	4-6	Stranded, Class B to K	Single	3.95 (35)
	8-18			2.26 (20)
	6-8	Stranded, Class B/C	Dual	3.39 (30)
		Stranded, Class K		2.26 (20)
	10-18	Stranded, Class B to K		
	10-18	Solid	Single/dual	2.26 (20)
	4-18	Stranded, UL ferrule, Class B/C	Single	3.39 (30)
	6-18		Twin†	
	4-18	Stranded, UL ferrule, Class K	Single	2.82 (25)
	6-18		Twin†	
100 A switches				
75°C Cu	12-18	Stranded, Class B/C	Single	2.26 (20)
	10			2.82 (25)
	8			4.52 (40
	4-6			5.08 (45)
	1-3			6.21 (55)
	4-12		Dual	5.08 (45)
	12-18	Stranded, UL ferrule, Class B/C	Single	2.26 (20)
	10			3.95 (35)
	1-8			4.52 (40)
	10-18		Twin†	2.26 (20)
	6-9			2.82 (25)
	10-18	Solid	Single/Dual	2.26 (20)
	8-18	Class K	Single	2.26 (20)
	1-7			3.39 (30)
	3-10		Dual	5.08 (45)
	8-18	Class K, UL ferrule	Single	2.26 (20)
	1-7			3.39 (30)
	6-18		Twin	2.26 (20)

† Two stranded conductors placed in one UL Listed twin ferrule.

Lineside and loadside fork terminal

- Fork terminal suitable for line, load or accessory connection, max. 30 A suitable for use with:
  - 10-24 screw for 30 and 60 A switches
  - 1/4-28 screw for 100 A switches

Available Bussmann series fuses

UL fuse class	Type/description	Volts	Data sheet no.
CF	Indicating time-delay, Low-Peak™ CUBEFuse (6-100 A)	600 Vac/ 300 Vdc	9000
	Non-indicating time-delay, Low-Peak CUBEFuse (1-100 A)		
	Non-indicating fast-acting CUBEFuse (1-100 A)	600 Vac/dc	2147

Dimensions – mm (in)

Switch (shown with optional terminal shrouds)

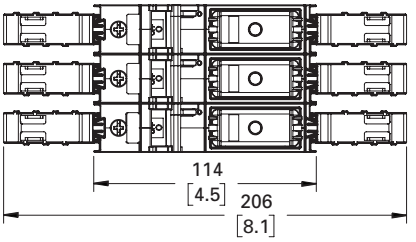

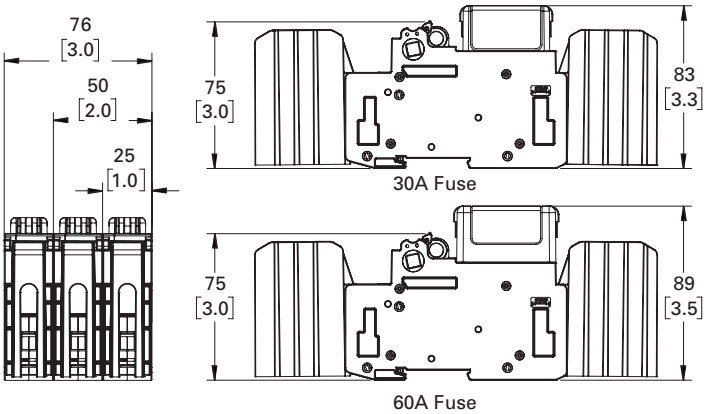

30 and 60 amp switches

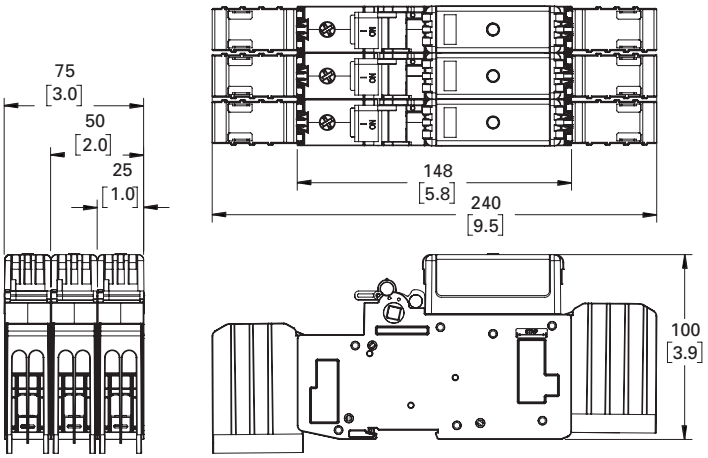

100 amp switches

Left front rotary switches (shown with optional terminal shrouds)

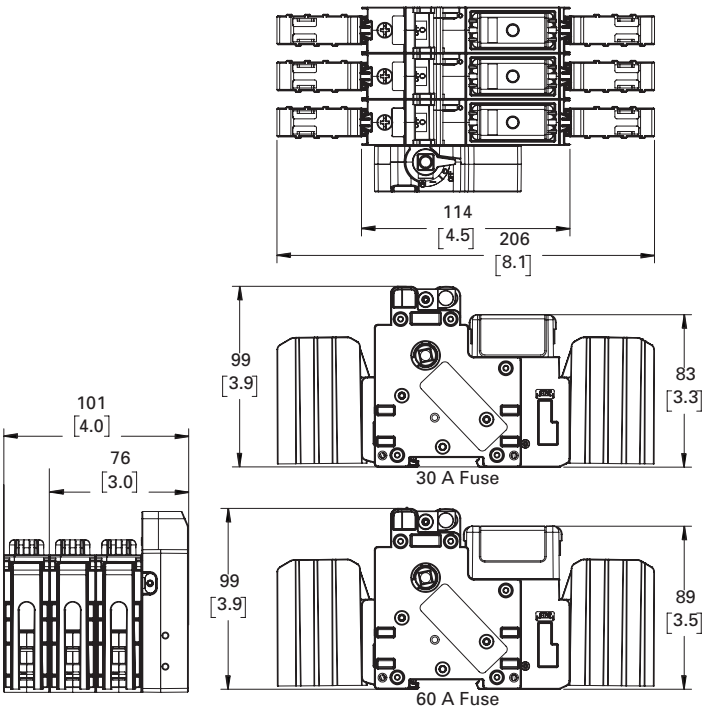

30 and 60 amp switches

Right front rotary switches (shown with optional terminal shrouds)

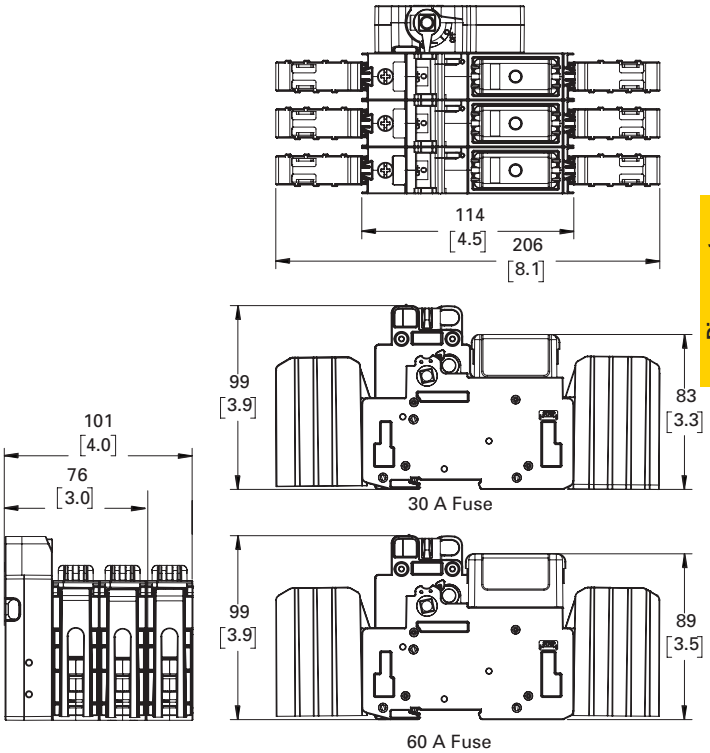

30 and 60 amp switches

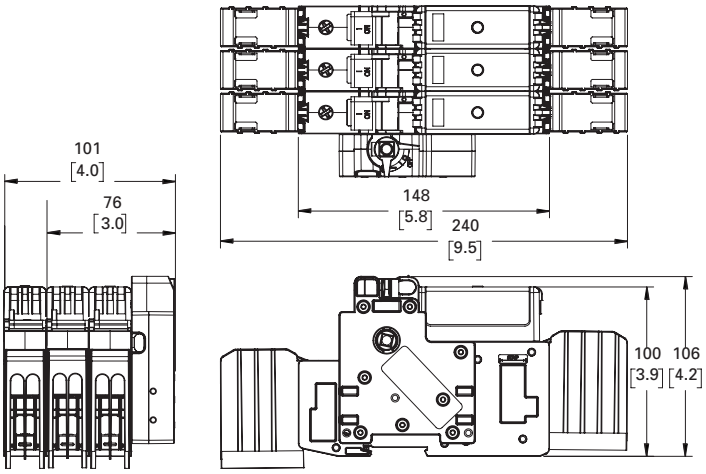

100 amp switches

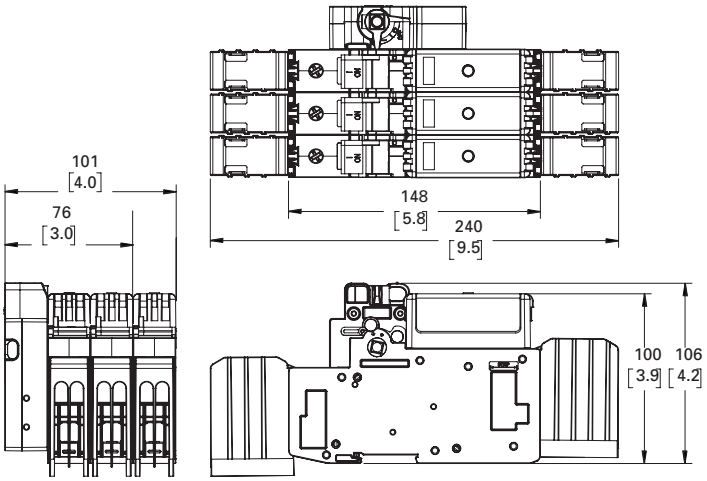

100 amp switches

Left side rotary switches (shown with optional terminal shrouds)

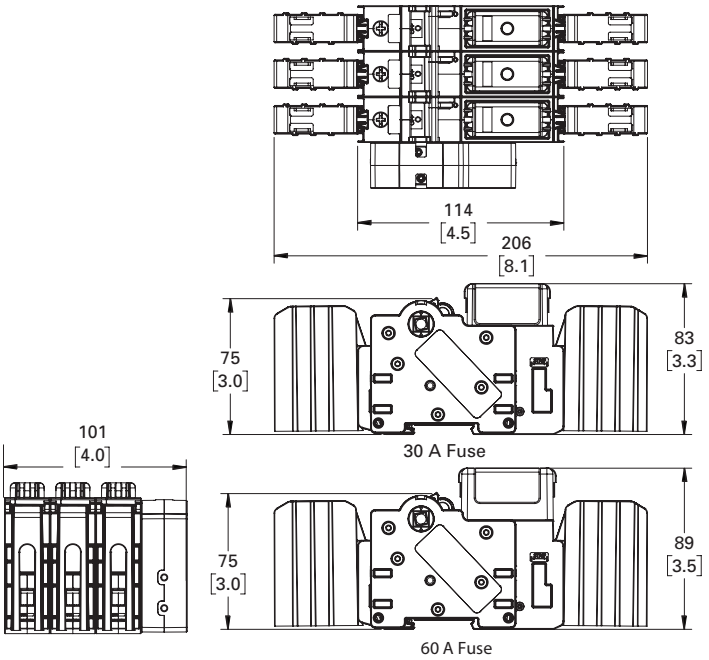

30 and 60 amp switches

Right side rotary switches (shown with optional terminal shrouds)

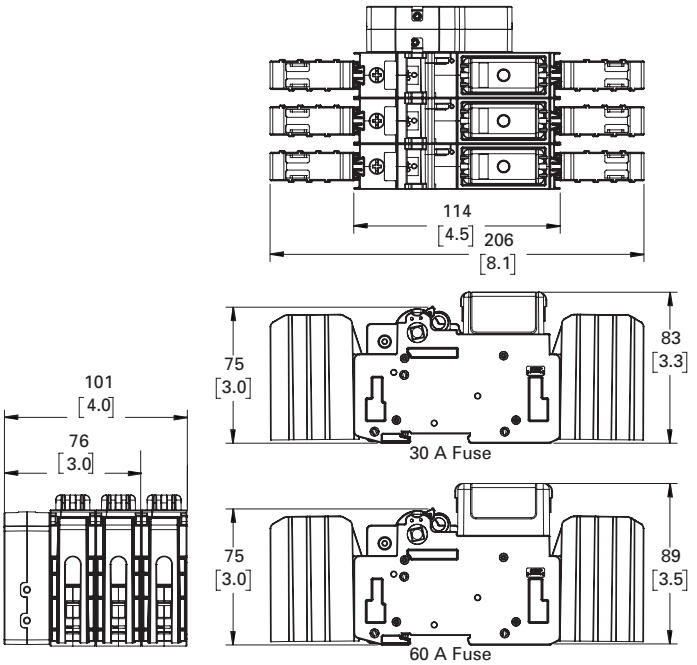

30 and 60 amp switches

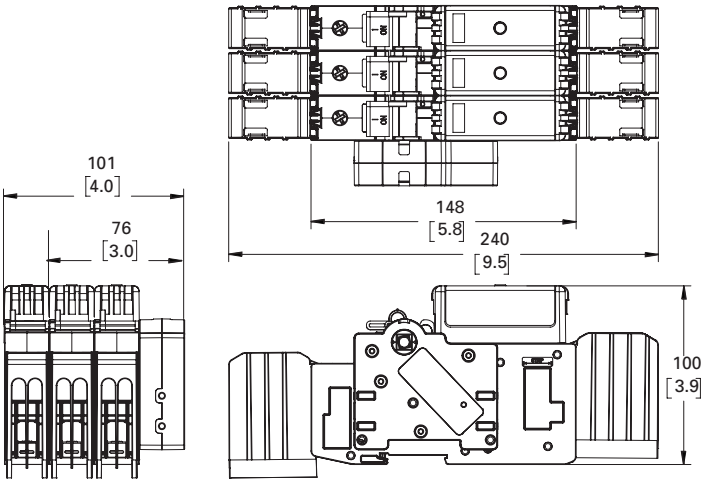

100 amp switches

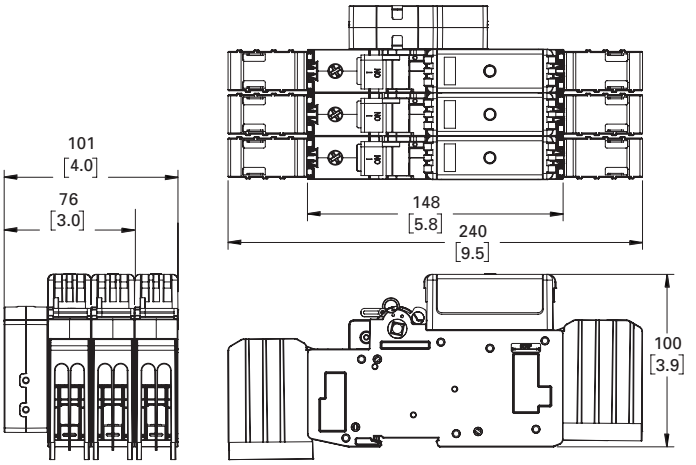

100 amp switches

200 and 400 A switches

200 A switch

400 A switch

With front rotary accessory

With side rotary accessory

Catalog no.	Poles	Amps	Description
CCP2-1-200CF	1	200	Switch only
CCP2-2-200CF	2		
CCP2-3-200CF	3		
CCP2-1-400CF	1	400	
CCP2-2-400CF	2		
CCP2-3-400CF	3		

Description

The Bussmann series 200 and 400 A Compact Circuit Protector (CCP2) fused disconnect switches utilize the finger-safe UL Class CF time-delay CUBEFuse with Class J electrical performance. With up to a 69 percent smaller footprint than a traditional fusible solution, these switches provide a high 200 kA SCCR to help improve panel and assembly SCCR.

The panel mount 200 and 400 A CCP2 switches are available with a variety of accessories to meet many application needs including rotary and flange handle operation.

Rotary operators are available for front or side (right or left) operation. Front rotary operators are for three-pole switches only while the side operator may be applied to the right or left side of 1-, 2- and 3-pole units.

Other accessories include lugs, terminal shrouds, rotary pistol handles, flange rod and cable operating mechanisms, NO/NC auxiliary contacts that easily integrate into various monitoring systems and a handle extension.

Front and side rotary operated versions are easily applied for through-the-door or through the left or right side operation to enhance safety.

Ratings

- Volts
  - 347 Vac (1-pole) 600 Vac (2- and 3-pole)
- Amps
  - 200 A
  - 400 A
- SCCR
  - 200 kA RMS Sym.

Poles

- 1-, 2- and 3-poles catalog number dependent

Agency information

- UL 98 Listed, Guide WHTY, File E302370
- cULus to Canadian Standard 22.2 No. 4-04, Guide WHTY7, File E302370
- RoHS compliant

Conductors/terminals

- See available lug table for size, type and torque information

Storage and operating temperature

- -20°C to 75°C (-4°F to 167°F)*

* For fuse performance under or above 25°C, consult fuse performance derating charts in the Bussmann Division publication no. 3002, titled Selecting Protective Devices (SPD)

Lockout/tagout provisions using 1/4" lock

- Integral with switch handle
- Front rotary operating mechanism
- Rotary pistol handles
- Flange rod and cable operators

Minimum enclosure size

- 200 A switch 16 x 12 x 6" (405 x 305 x 150 mm)
- 400 A switch 24 x 16 x 8 (610 x 405 x 200 mm)

Mounting

- Panel mount

Local open fuse indication minimum voltage

- 90 Vac, requires an open fuse to be in the CCP2 and the switch in the ON position

Accessories

- Lugs and lug kits with terminal shrouds
- Pistol handles for use with rotary operated switches
- NFPA 79 compliant handle
- 12 mm shafts for use with selector and pistol handles
- Auxiliary contacts
- Flange handle rod and cable operators

Features

- Uses UL Class CF time-delay CUBEFuse with Class J electrical performance
- Amp rating rejection feature will not accept a CUBEFuse amp ratings greater than switch rating
- High 200 kA short-circuit current rating
- Disconnect rated to provide means for load isolation
- Full voltage rated at 600 Vac
- UL 98 Listed and suitable for branch circuit disconnect and branch circuit protection with installed fuses
- Horsepower rated (see table below)
- Standard local open fuse indication light on each pole speeds troubleshooting
- Built-in switch interlock prevents inserting or removing fuse while in the ON position
- Padlockable for lockout/tagout procedures with a 1/4" lock
- Front and side rotary operator accessories provide for through-the-door and through-the-side operation flexibility and enhanced safety
- Optional pistol handles and shafts available for use with rotary operator accessories
- Multi-wire lug kits with terminal shrouds allow for power distribution to multiple loads.

Catalog numbers and horsepower ratings

Catalog no.	Poles	Description	Volts AC	SCCR	Max Hp rating (Vac) 240	480	600
200 amp switches							
CCP2-1-200CF	1	Switch only	347	200 kA	—	—	—
CCP2-2-200CF	2		600		10	—	—
CCP2-3-200CF	3				50	100	150
400 amp switches							
CCP2-1-400CF	1	Switch only	347	200 kA	—	—	—
CCP2-2-400CF	2		600		—	—	—
CCP2-3-400CF	3				100	200	250

Available lugs, conductor ratings and terminal torques

Catalog no.	Description	Lugs per cat. no.	Wire range AWG (mm²)	Wire type/ temp.	Conductor torque N•m (lb-in)	Lug mounting screw torque N•m (lb-in)
200 A switches						
CCP2-L2-1	Stainless steel lug	1	350-4 (185-25)	Cu 75°C	20.3 (180)	0.9 (8)
CCP2-L2-1A	Aluminum lug*	1	350-4 (185-25)	Cu/Al 75°C	28.2 (250)	13.5 (120)
CCP2-MW2-3	3-port multi-wire terminal with shroud*	3	2-14 (35-2.5)	Cu/Al 75°C	7.9 (70)	10.8 (95)
CCP2-MW2-6	6-port multi-wire terminal with shroud*	3	6-14 (16-2.5)	Cu/Al 75°C	2.8 (25)	10.8 (95)
* These lugs also accept 1/4" quick connect control wire terminals. Order catalog number CCP2-CWK2 (package of 12 terminals).						
400 A Switches						
CCP2-L4-1	Stainless steel lug	1	500-3 (240-35)	Cu 75°C	42.0 (375)	22.0 (200)
CCP2-L4-1A	Aluminum lug	1	500-3 (240-35)	Cu/Al 75°C	42.0 (375)	
CCP2-L4B-3	Stainless steel lug kit with shroud	3	750-500 (400-240)	Cu 75°C	57.0 (500)	
CCP2-L4B-3A	Aluminum lug kit with shroud	3	750-500 (400-240)	Cu/Al 75°C	62.0 (550)	
CCP2-L6-3	2-port stainless steel lug kit with shroud	3	(2) 500-2 (240-35)	Cu 75°C	42.0 (375)	
CCP2-L6-3A	2-port aluminum lug kit with shroud	3	(2) 500-2 (240-25)	Cu/Al 75°C	42.0 (375)	
CCP2-MW6-6	6-port multi-wire terminal with shroud	3	1/0-14 (50-2.5)	Cu/Al 75°C	10-14 = 3.9 (35) 8 = 4.5 (40) 4-6 = 5.0 (45 1/0-2 = 5.6 (50)	

Accessories

Catalog no.	Switch amps	Description
CCP2-TS2-3	200	3-pole terminal shroud
CCP2-PB2		Phase barriers (pack of 2)
CCP2-RM2		Front rotary operator* (3-pole switch only)
CCP2-TS6-3	400	3-pole terminal shroud
CCP2-PB6		Phase barriers (pack of 2)
CCP2-RM4		Front rotary operator* (3-pole switch only)
CCP2-SM	200/400	Side rotary operator* (1-, 2- or 3-pole switches)

* Complete installation requires pistol handle and shaft, order separately.

200 amp switch dimensions — mm (in)

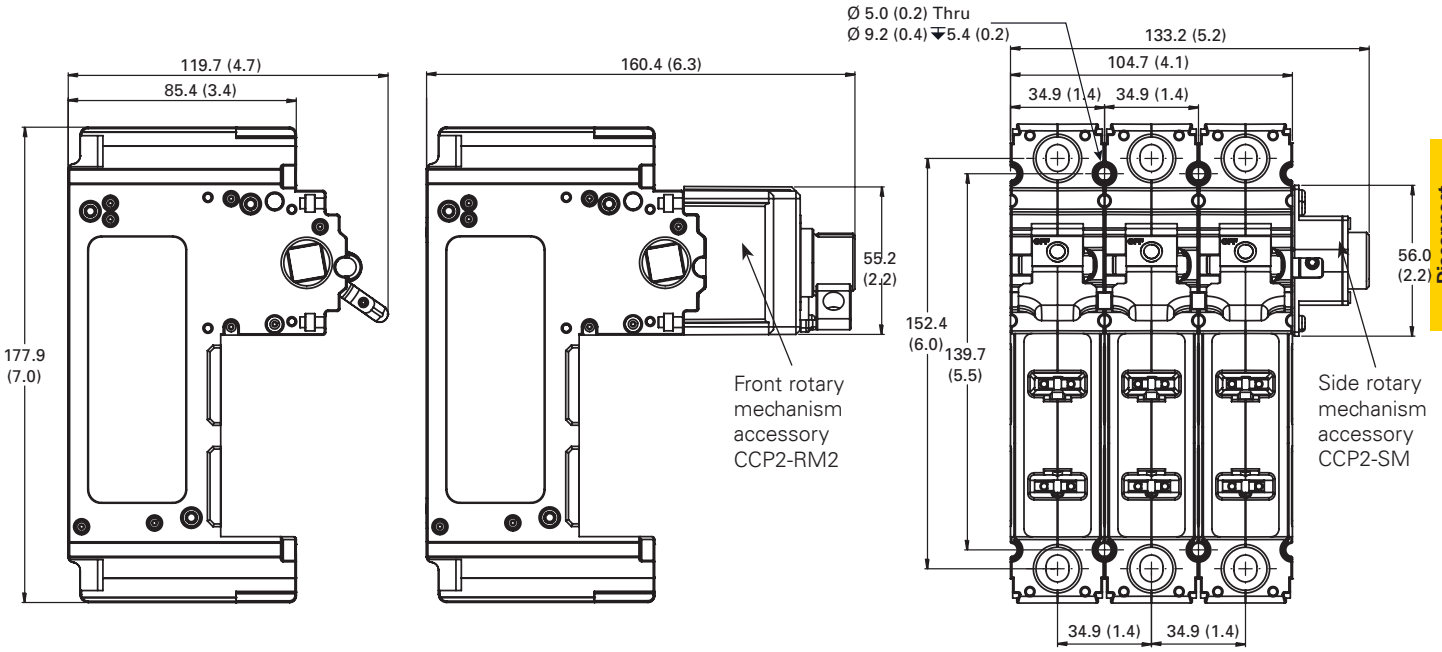

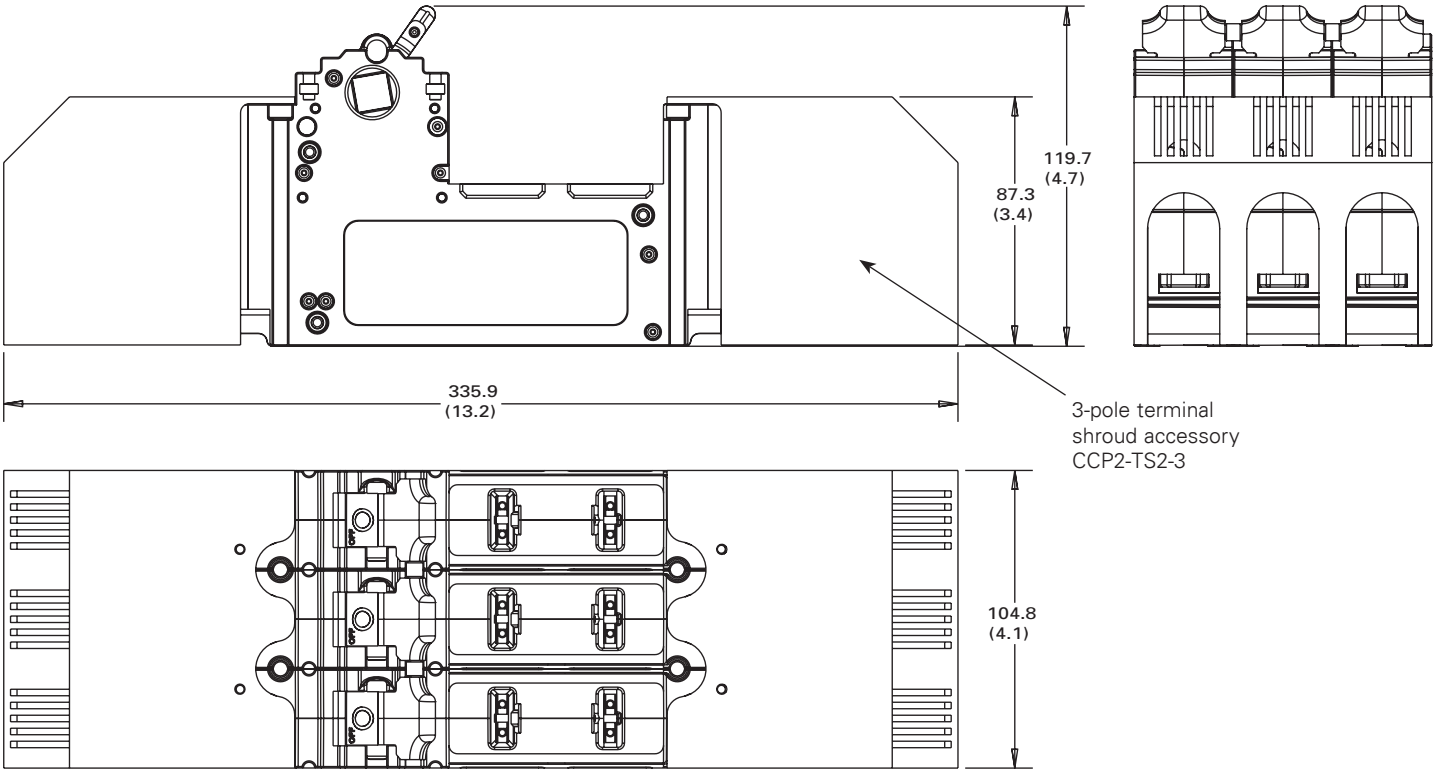

400 amp switch dimensions — mm (in)

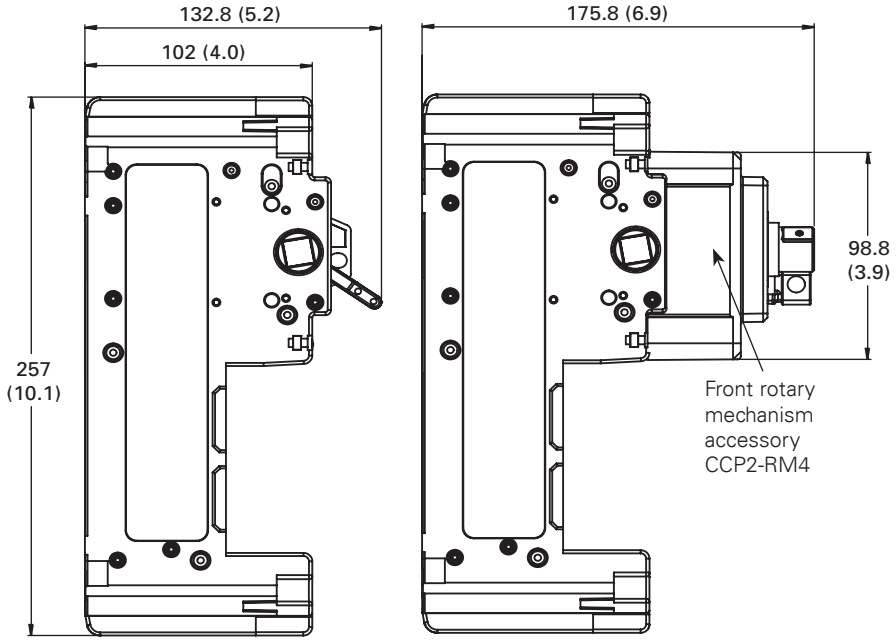

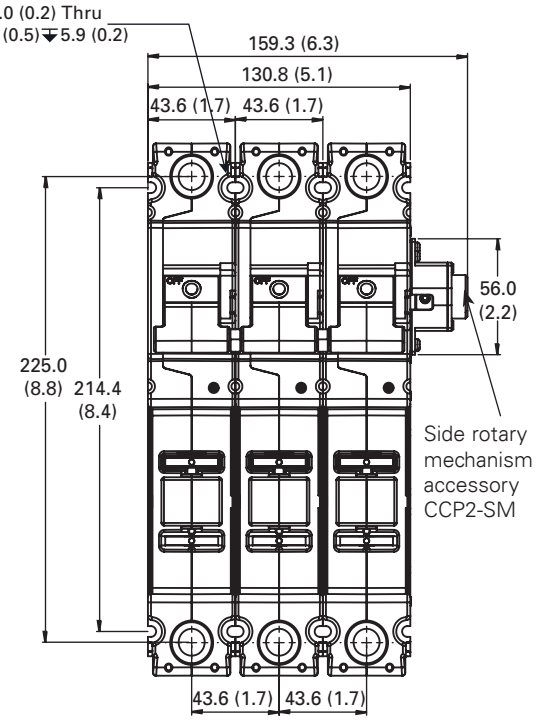

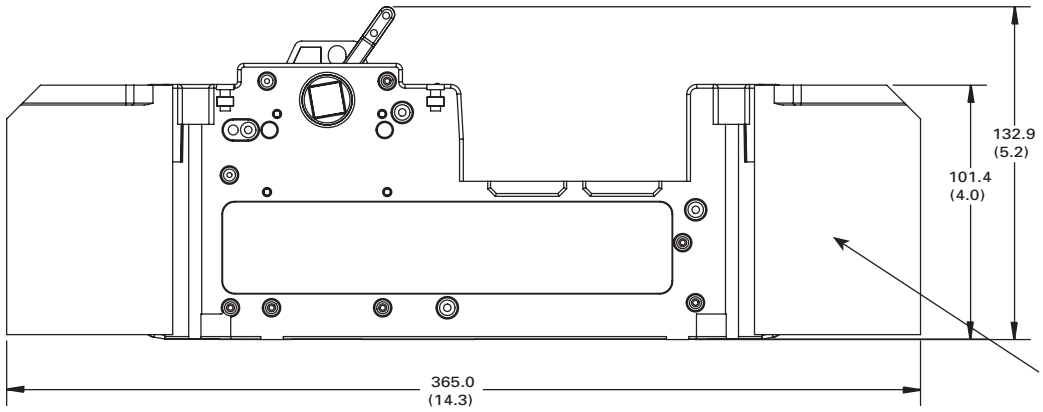

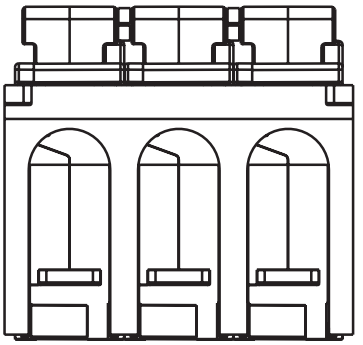

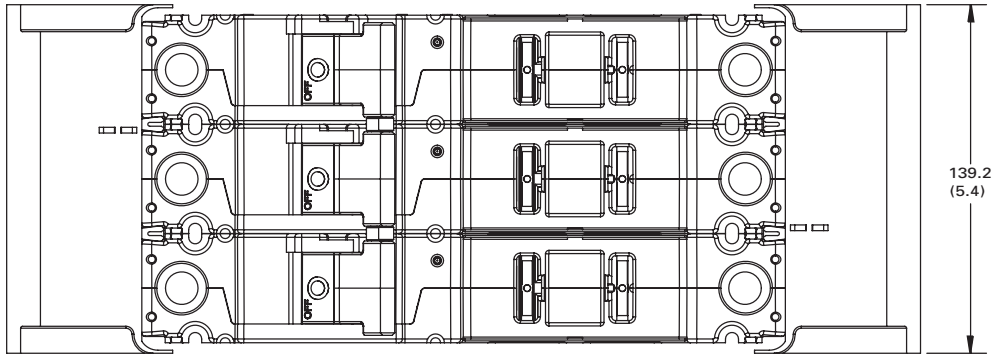

30, 60 and 100 A switch multi-wire lug kits

Catalog numbers

- CCP2-MW1-3 (30 and 60 A switches only)
- CCP2-MW1-6 (100 A switches only)

Description

The multi-wire lug kits permit expanding each box lug terminal on the switch into a three-port (30 and 60 A switches) or six-port (100 A switches) terminal for power distribution applications.

Each multi-wire lug kit comes with three lugs and three terminal shrouds. Shrouds provide finger-safe protection when properly installed.

Lugs may be mounted on either the loadside or lineside to meet various application needs.

Ports on any one lug accept any conductor combination listed, e.g., one of the ports may have dual 14 AWG wires and the other two ports single 10 AWG wires.

Ratings

- Volts 600 V
- Amps
  - 60 A max (CCP2-MW1-3)
  - 100 A max (CCP2-MW1-6)
- SCCR 200 kA

Agency information

- UL Recognized, Guide WHTY2, File E302370
- RoHS compliant

Storage and operating temperature

- -20°C to 75°C (-4°F to 167°F)

Multi-wire lug conductor information

- 75°C Cu/AL
- AWG size and quantity per port - see table below

Type	AWG range	Class	Quantity	Torque N•m (lb-in)
Cu/Al	4-6	Stranded, Class B/C	Single	3.95 (35)
	8			2.82 (25)
Cu	10-14	Stranded, Class B/C	Single/dual*	2.26 (20)
	10-14	Solid	Single	2.26 (20)
	8	UL ferrule, Class B to K	Single/twin†	2.82 (25)
	10-14			2.26 (20)

* Dual wire to be same size and type.
† Two stranded conductors placed in one UL Listed twin ferrule.

CCP2 box lug torque for multi-wire lugs

- 30/60 A switch lug, 4.52 N•m (40 lb-in)
- 100 A switch lug, 5.09 N•m (45 lb-in)

Installed on CCP2-3-xx

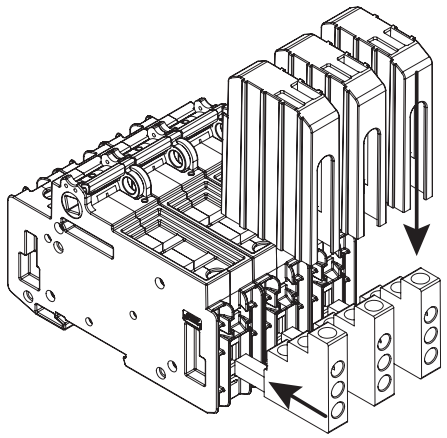

Multi-wire lugs mount in switch box lug terminals to provide three additional wire ports per pole. Lugs can be mounted on the switch lineside or loadside. Each multi-wire lug kit comes with three lugs and three shrouds.

Wire insulation strip lengths

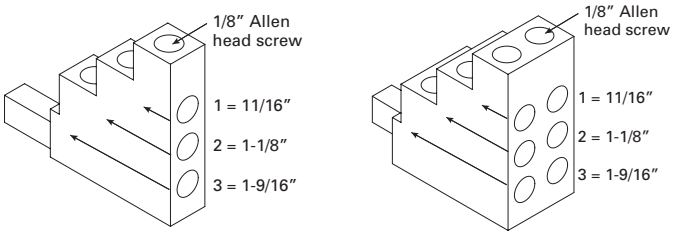

Strip back wire insulation to the lengths as indicated in the illustration above and the table below.

Lug port	Strip wire insulation back (inch)
1	11/16
2	1-1/8
3	1-9/16

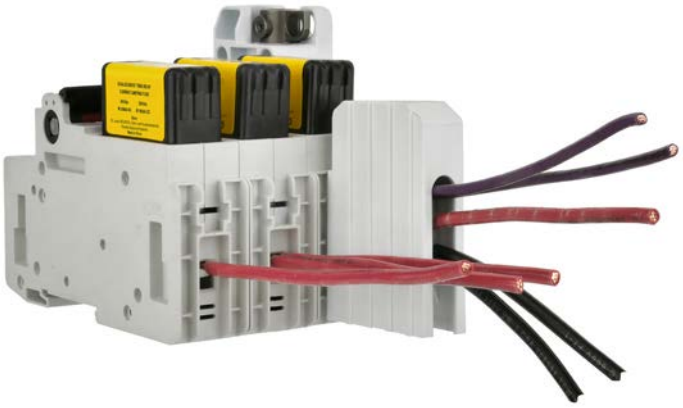

Wiring versatility is provided by single/dual rated box lug terminals on the switch, or by the three-port or six-port multi-wire lug kits that are also single/dual wire rated.

200 and 400 A switch multi-wire lug kits

Catalog numbers

- CCP2-MW2-3 (3-port, 200 A switches only)
- CCP2-MW2-6 (6-port, 200 A switches only)
- CCP2-MW6-6 (6-port, 400 A switches only)

Description

The multi-wire lug kits permit expanding the terminal on the switch into a three-port (200 A switches) or six-port (200 and 400 A switches) terminal for power distribution applications.

Each multi-wire lug kit comes with three lugs and a 3-pole terminal shroud. The shroud provides finger-safe protection when properly installed.

Lugs can only be mounted on loadside to meet application needs.

Ports on any one lug accept any conductor combination listed, e.g., one of the ports may have dual 14 AWG wires and the other two ports single 10 AWG wires.

Ratings

- Volts 600 V
- Amps
  - 225 A max (CCP2-MW2-3 and CCP2-MW2-6)
  - 600 A max (CCP2-MW6-6)
- SCCR 200 kA

Agency information

- UL Recognized, Guide WHTY2, File E302370
- RoHS compliant

Storage and operating temperature

- -20°C to 75°C (-4°F to 167°F)

Multi-wire lug conductor information

- 75°C Cu/AL
- AWG size and quantity per port - see table below

Type	AWG range	Class	Quantity	Torque N•m (lb-in)
Cu/Al	4-6	Stranded, Class B/C	Single	3.95 (35)
	8			2.82 (25)
Cu	10-14	Stranded, Class B/C	Single/dual*	2.26 (20)
	10-14	Solid	Single	2.26 (20)
	8	UL ferrule, Class B to K	Single/twin†	2.82 (25)
	10-14			2.26 (20)

* Dual wire to be same size and type.
† Two stranded conductors placed in one UL Listed twin ferrule.

Installed on CCP2-3-xx

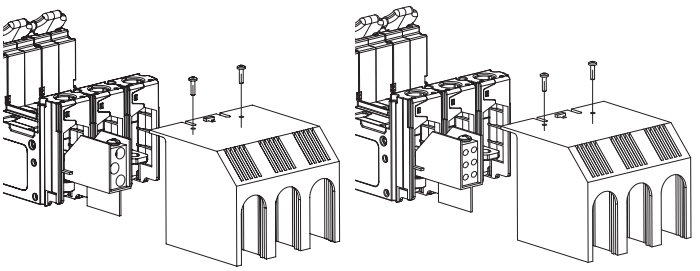

3- and 6-port multi-wire lugs mounted on 200 A switches

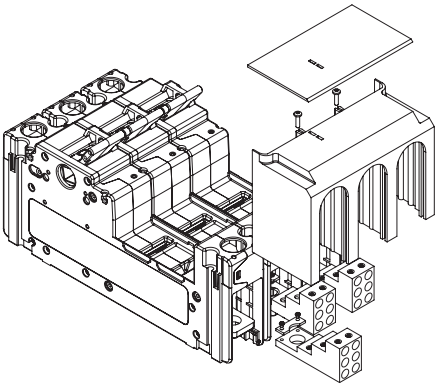

6-port multi-wire lugs mounted on 400 A switches

Multi-wire lugs mount on the switch terminals to provide three or six additional wire ports per pole. Lugs to be mounted only on the loadside. Each multi-wire lug kit comes with three lugs, a shroud and mounting hardware.

Wire insulation strip lengths

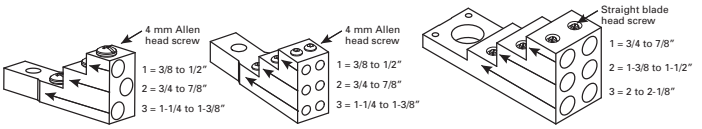

CCP2-MW2-3 CCP2-MW2-6 CCP2-MW6-6

Strip back wire insulation to the lengths indicated in the illustration above and the table below.

	Wire insulation strip length (inch)		
Lug kit	Lug port 1	Lug port 2	Lug port 3
CCP2-MW2-3	3/8 to 1/2	3/4 to 7/8	1-1/4 to 1-3/8
CCP2-MW2-6			
CCP2-MW6-6	3/4 to 7/8	1-3/8 to 1-1/2	2 to 2-1/8

Selector and pistol handles

Catalog symbol

- CCP2-H4X-_1 (selector handle for 30, 60 and 100 A switches)
- CCP2-H4X-_2 (pistol handle for 30, 60 and 100 A switches)
- CCP2-H4X-_3 (short pistol handle for 200 and 400 A switches)
- CCP2-H4X-_4 (long pistol handle for 200 and 400 A switches)

Description

Selector and pistol handles are used with rotary operated switches. Pistol handles for 200 and 400 A switches come in short and long versions. All handles are available in black/gray and red/yellow colors, and clockwise/counterclockwise operating modes. Front and right side operated switches use clockwise handles while left side operated switches use counterclockwise handles.

Installation requires an 8 mm shaft for 30, 60 and 100 A switches and a 12 mm shaft for 200 and 400 A switches (ordered separately).

Each handle is rated Type 1, 4X and 12, and accepts up to three (3) 1/4" diameter shank locks for lockout/tagout in the OFF position. They can also be field configured for lock-on and are defeatable.

Only the clockwise operating handles in combination with front rotary operating switches provide a door interlock means to ensure the enclosure door remains shut during lockout/tagout or lock-on. Rotary handles mounted on the enclosure's left or right side do NOT provide a door interlock means.

See the catalog number table below for applicable rotary switch, handle and shaft combinations.

Selector handles **Pistol handles —short and long**

Agency information

- UL Listed, Guide DIHS/DIHS7, File E140305
- Type 1, 4X and 12
- RoHS compliant
- CE

Storage and operating temperature

- -20°C to 75°C (-4°F to 167°F)

Handles and shafts for 30, 60 and 100 A switches

For catalog no.	Description/operation	Order handle cat. no.	Order either 8 mm shaft cat. no.
CCP2R-(pole)-30CF	Right front rotary, clockwise	CCP2-H4X-B1 (selector, black/grey) CCP2-H4X-R1(selector, red/yellow) CCP2-H4X-B2 (pistol, black/grey) CCP2-H4X-R2 (pistol, red/yellow)	CCP2-SH1-290 (11.5"/290 mm) CCP2-SH1-490 (19.3"/490 mm)
CCP2R-(pole)-60CF			
CCP2R-(pole)-100CF			
CCP2RL-(pole)-30CF	Left front rotary, clockwise		
CCP2RL-(pole)-60CF			
CCP2RL-(pole)-100CF			
CCP2S-(pole)-30CF	Right side rotary, clockwise		
CCP2S-(pole)-60CF			
CCP2S-(pole)-100CF			
CCP2SL-(pole)-30CF	Left side rotary, counterclockwise	CCP2-H4X-B1L (selector, black/grey) CCP2-H4X-R1L (selector, red/yellow) CCP2-H4X-B2L (pistol, black/grey) CCP2-H4X-R2L (pistol, red/yellow)	
CCP2SL-(pole)-60CF			
CCP2SL-(pole)-100CF			

Handles and shafts for 200 and 400 A switches

For catalog no.	Order front rotary mechanism cat. no.	Order right/ left side rotary mechanism cat. no.	Order front/right side clockwise handle cat. no.	Order left side counterclockwise handles (use only with CCP2-SM) cat. no.	Order either 12 mm shaft cat. no.
CCP2-(poles)-200CF	CCP2-RM2*	CCP2-SM	CCP2-H4X-B3 (short - black/grey) CCP2-H4X-R3 (short - red/yellow)	CCP2-H4X-B3L (short - black/grey) CCP2-H4X-R3L (short - red/yellow)	CCP2-SH2-225 (8.9"/225 mm)
CCP2-(poles)-400CF	CCP2-RM4*		CCP2-H4X-B4 (long - black/grey) CCP2-H4X-R4 (long - red/yellow)	CCP2-H4X-B4L (long - black/grey) CCP2-H4X-R4L (long - red/yellow)	CCP2-SH2-425 (16.7"/425 mm)

* For three-pole switches only.

Handle dimensions — mm (in)

Selector for 8 mm shafts

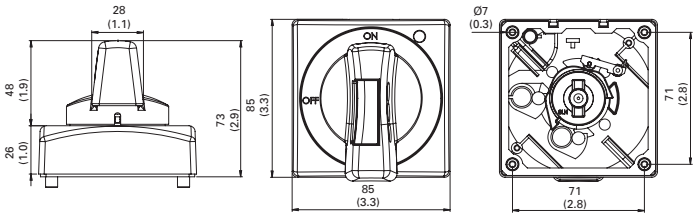

Short pistol for 8 mm and 12 mm shafts

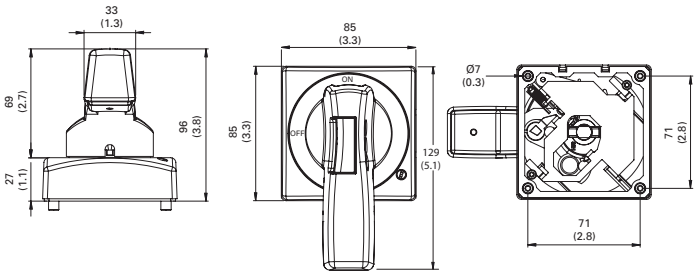

Long pistol for 12 mm shafts

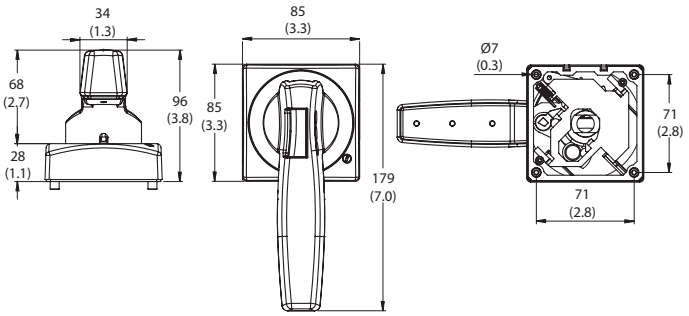

Handle shafts

8 mm shafts

12 mm shafts

Catalog numbers

- CCP2-SH1-290 (8 mm, 290 mm long)
- CCP2-SH1-490 (8 mm, 490 mm long)
- CCP2-SH2-225 (12 mm, 225 mm long)
- CCP2-SH2-425 (12 mm, 425 mm long)

Description

Square shafts available in:

- 8 mm square by 290 and 490 mm lengths for 30, 60 and 100 A switches
- 12 mm square by 225 and 425 mm lengths for 200 and 400 A switches

All shafts are indexed to ensure handle/switch orientation for correct operation. Shafts are to be cut to length when installed.

NFPA 79 compliant handles

Catalog numbers

- CCP2-NFPA-1
  (8 mm shafts for 30-100 A switches)
- CCP2-NFPA-2
  (12 mm shafts for 200 and 400 A switches)

Description

NFPA 79 handles mount on the shaft of front rotary operated switch installations and provide a lockout means independent of the door position.

Flange handle rod and cable operators

Catalog no.	Description	Rating
30, 60 and 100 amp switches		
CCP2-FLR1	Rod operator with painted handle	Type 1, 3R, 12
CCP2-FLR1X	Rod operator with chrome handle	Type 4X
CCP2-FLC1-36	36″ Cable with painted handle	Type 1, 3R, 12
CCP2-FLC1-36X	36″ Cable with chrome handle	Type 4X
CCP2-FLC1-60	60″ Cable with painted handle	Type 1, 3R, 12
CCP2-FLC1-60X	60″ Cable with chrome handle	Type 4X
CCP2-FLC1-120	120″ Cable with painted handle	Type 1, 3R, 12
CCP2-FLC1-120X	120″ Cable with chrome handle	Type 4X
200 and 400 amp switches		
CCP2-FLR2	Rod operator with painted handle	Type 1, 3R, 12
CCP2-FLR2X	Rod operator with chrome handle	Type 4X
CCP2-FLC2-36	36″ Cable with painted handle	Type 1, 3R, 12
CCP2-FLC2-36X	36″ Cable with chrome handle	Type 4X
CCP2-FLC2-60	60″ Cable with painted handle	1, 3R, 12
CCP2-FLC2-60X	60″ Cable with chrome handle	Type 4X
CCP2-FLC2-120	120″ Cable with painted handle	Type 1, 3R, 12
CCP2-FLC2-120X	120″ Cable with chrome handle	Type 4X

Description

Flange rod and cable operators for use on 2- and 3-pole CCP2 switches (cannot be used with 2- or 3-pole 30, 60 or 100 amp switches already having a front or side rotary operating mechanism).

Handles are available in painted versions with NEMA 1, 3R and 12 ratings or chrome versions with a NEMA 4X rating.

Cable operators are available with 36, 60 and 120 inch cable lengths.

Agency information

- Type 1, 4X and 12
- RoHS compliant

Storage and operating temperature

- -20°C to 75°C (-4°F to 167°F)

Packaging

- Each handle is packaged individually as a kit

Flange rod operator kit for 30, 60 and 100 A switches.

Flange rod operator kit for 200 and 400 A switches.

Flange cable operator kit for 30, 60 and 100 A switches.

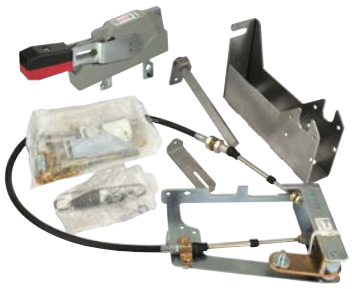

Flange cable operator kit for 200 and 400 A switches.

Front rotary mechanisms for 200 and 400 A switches

Catalog numbers

- CCP2-RM2 (3-pole 200 A switches)
- CCP2-RM4 (3-pole 400 A switches)

Description

Front rotary mechanisms for through-the-door operation and install on the front of 3-pole switches only. These units provide at-switch lockout/tagout capability for enhanced safety. Complete installation requires installing pistol handle (short or long) and 12 mm shaft.

Packaged individually.

Side rotary mechanism for 200 and 400 A switches

Catalog number

- CCP2-SM
  (1-, 2- or 3-pole 200 and 400 A switches)

Description

Side rotary mechanism for through-the-side operation and installs on the left or right side (right side installation recommended) of any 1-, 2- or 3-pole 200 and 400 A switch. The side rotary mechanism does not provide for door interlock nor local lockout/tagout capability. Complete installation requires installing pistol handle (short or long) and 12 mm shaft.

Packaged individually.

Terminal shrouds

Catalog numbers

- CCP2-TS2-3
  (3-pole 200 A switches)
- CCP2-TS6-3
  (3-pole 400 A switches)

Description

3-pole shroud kit with shields for isolating the lugs on 3-pole 200 and 400 A switches.

Packaged individually.

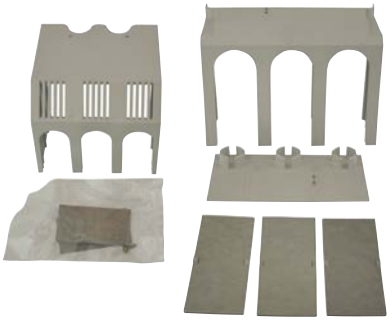

Phase barriers

Catalog numbers

- CCP2-PB2
  (3-pole 200 A switches)
- CCP2-PB6
  (3-pole 400 A switches)

Description

Phase barrier kit with two phase barriers for isolation between the lugs on 3-pole 200 and 400 A switches.

Packaged individually.

Handle extension

Catalog number

- CCP2-HEX (1-, 2- and 3-pole 200 and 400 A switches)

Description

A handle extension to provide additional leverage for operating the switch in installations that do not have rotary mechanisms or flange operators installed. Does not mount on switch, provision for tether provided.

Packaged individually.

Auxiliary contacts for 30, 60 and 100 A switches

Catalog numbers

- CCP2-AUX (30 and 60 A switches)
- CCP2-AUX-100 (100 A switches)

Description

NO+NC contact output to indicate the switching mechanism status on the CCP2. A single unit can be mounted on any 1-, 2- or 3-pole CUBEFuse CCP2 switch and the left front/left side rotary operated switches.

Ratings

- 240 Vac max
- 5 A max
- NC/NO contacts are closed/open when the CCP2 switch is in the "ON" position (closed)

Catalog no.	Switch	Description	Max per CCP2*	Ratings
CCP2-AUX	30/60 A only	Auxiliary contacts N/NC for switch status	1 per CCP2 (1-, 2- or 3-pole)	5 A / 240 Vac
CCP2-AUX-100	100 A only			

* The CCP2-AUX CANNOT be mounted on the right front and right side rotary operated versions, nor installed with the flange handle rod or cable operator. De-energize all circuits and follow all prescribed safety procedures before installing or removing the auxiliary contact device.

Agency information

- UL 98 Recognized, Guide WHTY2, File E155130
- cURus to Canadian Standard 22.2 No. 4-04
- Finger-safe in installed state
- RoHS compliant
- CE

Wiring

- 16-20 AWG (1.5 to 0.5 mm²) single and dual stranded wire
- 20 AWG (1.5 mm²) single and dual solid wire
- Torque 0.56 N•m (5 lb-in)
- Use only 75°C Cu wire

Packaging

- CCP2-AUX and CCP2-AUX-100 are packaged individually

Installation technique

- Mounts on the CCP2's right side ONLY and mechanically interlocks with the CCP2 switch handle with provided hardware. The CCP2-AUX and CCP2-AUX-100 CANNOT be mounted on the right front and right side rotary operated versions, nor installed with the flange handle rod or cable operator.

Storage and operating temperature

- -20°C to 75°C (-4°F to 167°F)

Installed on a CCP2-3-xx

Note: CCP2-AUX and CCP2-AUX-100 **CANNOT** be mounted on the right front and right side rotary operated versions, nor installed with the flange handle rod or cable operator.

Dimensions — in

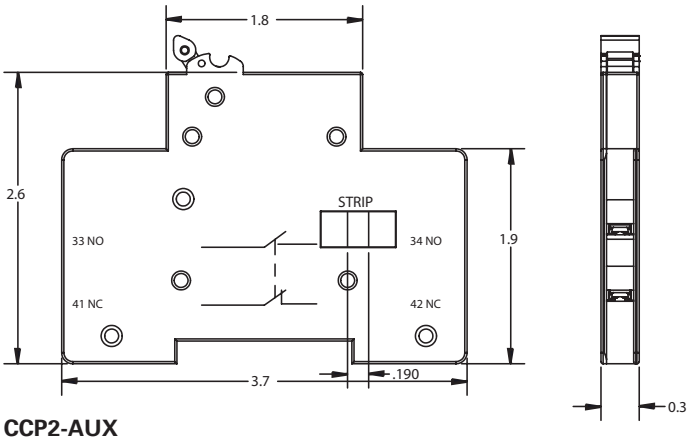

CCP2-AUX

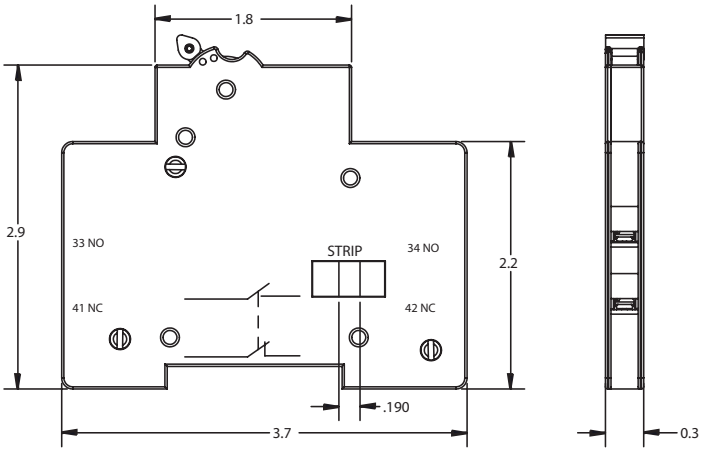

CCP2-AUX-100

Auxiliary contacts for 200 and 400 A switches

Catalog number

- CCP2-AUX-S (200 and 400 A switches)

Description

NO+NC contact output to indicate the switching mechanism status on the CCP2. A single unit can be mounted on either side of any 1-, 2- or 3-pole switch (cannot be mounted on the same side as the CCP2-SM side rotary mechanism or the right side if a flange handle rod or cable operator is installed).

Ratings

- 240 Vac max
- 5 A max
- NC/NO contacts are closed/open when the CCP2 switch is in the "ON" position (closed)

Catalog no.	Switch	Description	Max per CCP2*	Ratings
CCP2-AUX-S	200 and 400 A	Auxiliary contacts NO+NC for switch status	1 per CCP2 (1-, 2- or 3-pole)	5 A / 240 Vac

* The CCP2-AUX-S CANNOT be mounted on the same side where the side rotary mechanism (CCP2-SM) is installed.
De-energize all circuits and follow all prescribed safety procedures before installing or removing the auxiliary contact device.

Agency information

- UL 98 Recognized, Guide WHTY2, File E155130
- cURus to Canadian Standard 22.2 No. 4-04
- Finger-safe in installed state
- RoHS compliant

Wiring

- 16-20 AWG (1.5 to 0.5 mm^2) single and dual stranded wire
- 20 AWG (1.5 mm^2) single and dual solid wire
- Torque 0.56 N•m (5 lb-in)
- Use only 75°C Cu wire

Installation technique

- Mounts on either side of the 200 and 400 A switches and mechanically interlocks with the switch's handle with provided hardware. The CCP2-AUX-S CANNOT be mounted on the same side with an installed CCP2-SM side rotary mechanism, or the flange cable/rod operating mechanisms.

Storage and operating temperature

- -20°C to 75°C (-4°F to 167°F)

Packaging

- Packaged individually.

Installed on a CCP2-3-xx

Note: CCP2-AUX-S **CANNOT** be mounted on the same side as the side rotary mechanism CCP2-SM or the right side if a flange handle rod or cable operator is installed.

PLC fuse monitor for 30, 60 and 100 A switches

Catalog numbers

- CCP2-PLC-IND (30/60 A switches)
- CCP2-PLC-100 (100 A switches)

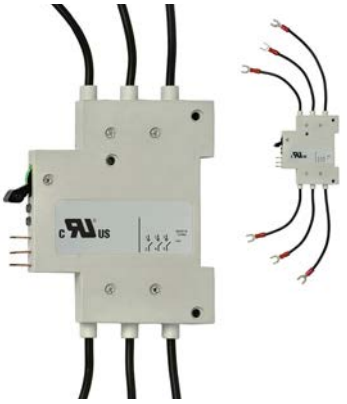

Description

A resettable three-phase fuse monitor that integrates with the I/O card in a Programmable Logic Controller (PLC). A single unit can be mounted on any 1-, 2- or 3-pole CUBEFuse CCP2 switch up to 100 A and the left front/ left side rotary operated switches.
A single unit monitors up to three phases. When used on 1- and 2-pole switches unused conductor(s) are removed after installation. The CCP2-PLC-IND and CCP2-PLC-100 **CANNOT** be mounted on the left front/left side rotary operated versions or if a multi-wire lug kit is installed or if a multi-wire lug kit is installed, or if the flange handle rod operator is installed.

Ratings

- Signal output to PLC*
  - +24 Vdc, 10 mA max
- Output signals
  - Digital 0 Vdc (low), 24 Vdc max (high)
  - 0 Vdc Low – fuse is good
  - 24 Vdc High – fuse has opened

* When the fuse opens, the output signal is sent high and will remain high until the unit is reset.

Emissions and immunity testing

- IEC 60947-1: Voltage Switchgear and Control Gear
- IEC 61000-6-2: Electromagnetic Compatibility (EMC)
  - IEC 61000-4-2: Electrostatic Discharge Immunity - Test at level 3 (6 kV-Contact Discharge) and level 2 (4 kV-Air Discharge)
  - IEC 61000-4-3: Electromagnetic Compatibility - Radiated, Radio-frequency, Electromagnetic Field Immunity test at level x (20 V/m)
  - IEC 61000-4-4: Electromagnetic Compatibility - Testing and Measurement Techniques at level 3 (± 2kV - Power Port and ±1 kV - I/O Ports)
  - IEC 61000-4-5: Electromagnetic Compatibility - Surge Immunity test at level 4 (±4 kV)
  - IEC 61000-4-6: Immunity to Conducted Disturbances at level 3 (10 V)

Catalog no.	Switch	Description	Max per CCP2**	Signal output to PLC	Min. circuit volts
CCP2-PLC-IND	30/60 A only	Wired remote fuse indication for PLC applications	1 per CCP2 (1, 2- or 3-pole)	24 Vdc/ 10 mA	100 Vac
CCP2-PLC-100	100 A only				

**The CCP2-PLC-IND and CCP2-PLC-100 CANNOT be mounted on the left front/ left side rotary operated versions or if a multi-wire lug kit is installed.

De-energize all circuits and follow all prescribed safety procedures before installing or removing the CCP2-PLC-IND or CCP2-PLC-100.

Agency information

- UL 98 Recognized, Guide WHTY2, File E155130
- cURus to Canadian Standard 22.2 No. 4-04

Local indication

- Two distinct LEDs indicate unit power (green) and open fuse (red). Open fuse LED is resettable upon fuse replacement and the actuating the reset switch

Wiring

- For power, signal and ground connections use shielded twisted pair 22-24 AWG (0.34-0.25 mm^2) 300 V rated wire

Installation technique

- Mounts on the left side ONLY of the CCP2 and mechanically interlocks with the CCP2 switch handle with hardware provided. The CCP2-PLC-IND and CCP2-PLC-100 **CANNOT** be mounted on the left front/left side rotary operated versions or if a multi-wire lug kit is installed or if the flange handle rod operator is installed.

IP20 rating — yes

Storage and operating temperature

- -20°C to 75°C (-4°F to 167°F)

PLC programming

- The CCP2-PLC-IND or CCP2-PLC-100 signal line is designed to provide a digital input to a PLC I/O card. In this case, a Programmable Logic Control program must be written to properly interpret the input signal to the PLC. The PLC program should check for consecutive high signals before taking action on a critical process.

Installed on a CCP2-3-xx

CCP2-PLC-IND mounted on a 3-pole switch and using the fork terminals. When mounted on a 2- or 1-pole switch, remove unused leads.

Note: the CCP2-PLC-IND **CANNOT** be mounted on the left front/left side rotary operated versions or if the multi-wire lug kit is installed or if the flange handle rod operator is installed.

PLC wiring schematic

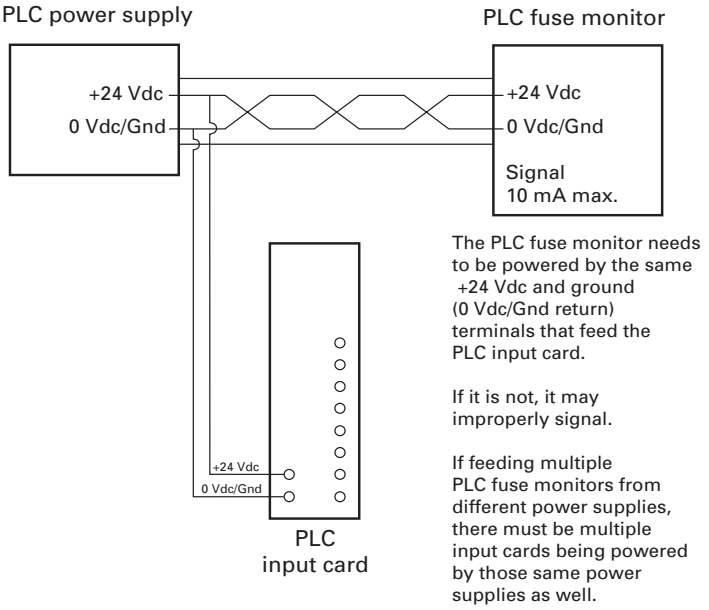

The PLC fuse monitor needs to be powered by the same +24 Vdc and ground (0 Vdc/Gnd return) terminals that feed the PLC input card.

If it is not, it may improperly signal.

If feeding multiple PLC fuse monitors from different power supplies, there must be multiple input cards being powered by those same power supplies as well.

Dimensions — in

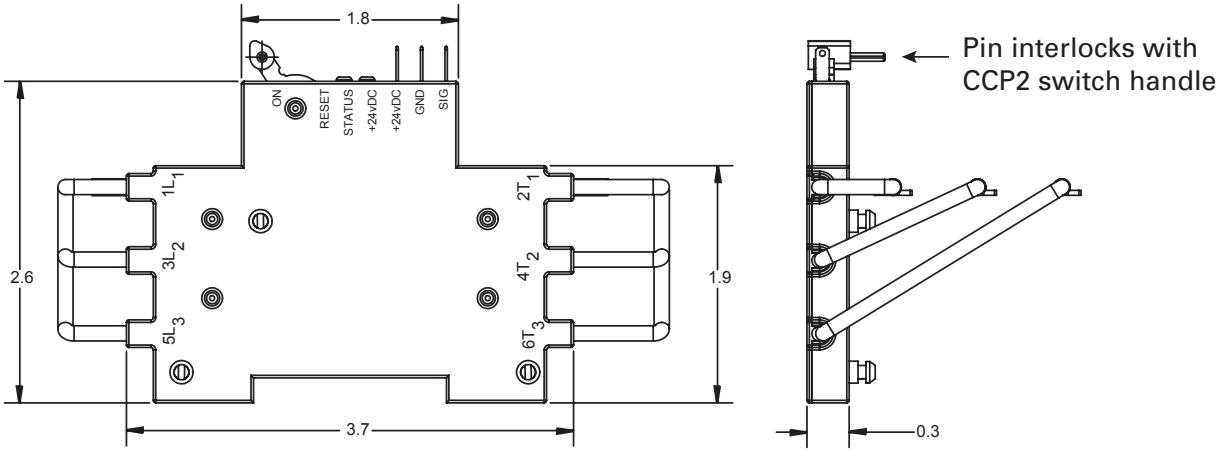

30 and 60 A CCP

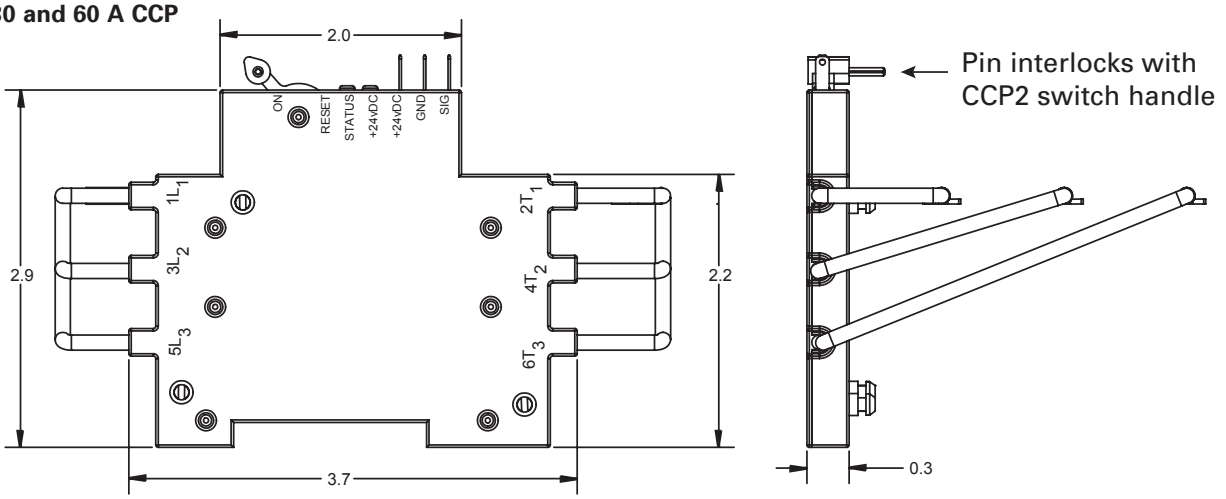

100 A CCP

Ordering a complete switch installation

30 and 60 A CCP2 switches

For a complete assembly, select from the following required and optional components, and accessories.

		Catalog no.		
Required		**Switches**	**Amps**	**Poles**
		Switch (used alone or with flange cable or flange rod handles)		
		CCP2-1-30CF	30	1
		CCP2-2-30CF		2
		CCP2-3-30CF		3
		CCP2-1-60CF	60	1
		CCP2-2-60CF		2
		CCP2-3-60CF		3
		And		
Optional		**Flange handle rod operator**	**Description — 3-pole switches only**	**Rating**
		CCP2-FLR1-21	Red/black painted handle	1, 3R and 12
		CCP2-FLR1-21X	Chrome handle	4X
		Or		
		Flange handle cable operator	**Description - 3-pole switches only, cannot be used with side or front rotary mechanisms**	**Rating**
		CCP2-FLC1-36	36″ cable, red/black painted handle	Type 1, 3R, 12
		CCP2-FLC1-36X	36″ cable, chrome handle	Type 4X
		CCP2-FLC1-60	60″ cable, red/black painted handle	Type 1, 3R, 12
		CCP2-FLC1-60X	60″ cable, chrome handle	Type 4X
		CCP2-FLC1-120	120″ cable, red/black painted handle	Type 1, 3R, 12
		CCP2-FLC1-120X	120″ cable, chrome handle	Type 4X
		Multi-wire lug kits	**Description**	
		CCP2-MW1-3	3-port multi-wire, 75°C Cu/Al, 6-14, includes terminal shrouds, pack of 3	
		And		
Accessories		**Terminal shrouds**	**Description**	
		CCP2-TS1-3	Pack of 3	
		Auxiliary contacts	**Description — mounts on right side, cannot be used with flange handle rod or cable operator**	
		CCP2-AUX	NO/NC, 5 A / 240 V	
		PLC fuse monitor	**Description — mounts on left side, cannot be used with flange handle rod operator**	
		CCP2-PLC-IND	Signal output 24 Vdc / 10 mA	

Ordering a complete switch installation

30 and 60 A CCP2 clockwise rotary switches

For a complete assembly, select from the following required and optional components, and accessories.

		Catalog no.		
		Switches	**Amps**	**Poles**
Required		**Right front rotary**		
		CCP2R-2-30CF	30	2
		CCP2R-3-30CF		3
		CCP2R-2-60CF	60	2
		CCP2R-3-60CF		3
		Left front rotary		
		CCP2RL-2-30CF	30	2
		CCP2RL-3-30CF		3
		CCP2RL-2-60CF	60	2
		CCP2RL-3-60CF		3
		Right side rotary		
		CCP2S-2-30CF	30	2
		CCP2S-3-30CF		3
		CCP2S-2-60CF	60	2
		CCP2S-3-60CF		3
		And		
		Rotary handles	**Description**	**Rating**
		CCP2-H4X-B1	Selector handle — black/grey	Type 1, 4X, 12
		CCP2-H4X-R1	Selector handle — red/yellow	
		CCP2-H4X-B2	Pistol handle — black/grey	
		CCP2-H4X-R2	Pistol handle — red/yellow	
		And		
		Shafts (8 mm)	**Length**	
		CCP2-SH1-290	290 mm	
		CCP2-SH1-490	490 mm	
		NFPA 79 compliant handle	**Color**	
		CCP2-NFPA-1	Red	
And				
Optional		**Multi-wire lug kits**	**Description**	
		CCP2-MW1-3	3-port multi-wire, 75°C Cu/Al, 6-14, includes terminal shrouds, pack of 3	

And			
Accessories		**Terminal shrouds**	**Description**
		CCP2-TS1-3	Pack of 3
		Auxiliary contacts	**Description — use with CCP2RL-(poles)-30/60CF switches**
		CCP2-AUX	NO/NC, 5 A / 240 V
		PLC fuse monitor	**Description — use with CCP2R-(poles)-30/60CF and CCP2S-(poles)-30/60CF switches**
		CCP2-PLC-IND	Signal output 24 Vdc / 10 mA

Ordering a complete switch installation

30 and 60 A CCP2 counterclockwise switches

For a complete assembly, select from the following required and optional components, and accessories.

Required		**Catalog no.**		
		Switches	**Amps**	**Poles**
		Left side rotary		
		CCP2SL-2-30CF	30	2
		CCP2SL-3-30CF		3
		CCP2SL-2-60CF	60	2
		CCP2SL-3-60CF		3
		And		
		Rotary handles	**Description**	**Rating**
		CCP2-H4X-B1L	Selector handle — black/grey	Type 1, 4X, 12
		CCP2-H4X-R1L	Selector handle — red/yellow	
		CCP2-H4X-B2L	Pistol handle — black/grey	
		CCP2-H4X-R2L	Pistol handle — red/yellow	
		And		
		Shafts (8 mm)	**Length**	
		CCP2-SH1-290	290 mm	
		CCP2-SH1-490	490 mm	
		NFPA 79 compliant handle	**Color**	
		CCP2-NFPA-1	Red	
And				
Optional		**Multi-wire lug kits**	**Description**	
		CCP2-MW1-3	3-port multi-wire, 75°C Cu/Al, 6-14, includes terminal shrouds, pack of 3	
And				
Accessories		**Terminal shrouds**	**Description**	
		CCP2-TS1-3	Pack of 3	
		Auxiliary contacts	**Description —mounts on right side**	
		CCP2-AUX	NO/NC, 5 A / 240 V	

Ordering a complete switch installation

100 A CCP2 switches

For a complete assembly, select from the following required and optional components, and accessories.

Required		**Catalog no.**		
		Switches	**Amps**	**Poles**
		Switch (used alone or with flange cable or flange rod handles)		
		CCP2-1-100CF	100	1
		CCP2-2-100CF		2
		CCP2-3-100CF		3
		And		
Optional		**Flange handle rod operator**	**Description — 3-pole switches only**	**Rating**
		CCP2-FLR1-21	Red/black painted handle	1, 3R and 12
		CCP2-FLR1-21X	Chrome handle	4X
		Or		
		Flange handle cable operator	**Description - 3-pole switches only, cannot be used with side or front rotary mechanisms**	**Rating**
		CCP2-FLC1-36	36″ cable, red/black painted handle	Type 1, 3R, 12
		CCP2-FLC1-36X	36″ cable, chrome handle	Type 4X
		CCP2-FLC1-60	60″ cable, red/black painted handle	Type 1, 3R, 12
		CCP2-FLC1-60X	60″ cable, chrome handle	Type 4X
		CCP2-FLC1-120	120″ cable, red/black painted handle	Type 1, 3R, 12
		CCP2-FLC1-120X	120″ cable, chrome handle	Type 4X
		Multi-wire lug kits	**Description**	
		CCP2-MW1-6	6-port multi-wire, 75°C Cu/Al, 6-14, includes terminal shrouds, pack of 3	
		And		
Accessories		**Terminal shrouds**	**Description**	
		CCP2-TS1-6	Pack of 3	
		Auxiliary contacts	**Description — mounts on right side, cannot be used with flange handle rod or cable operator**	
		CCP2-AUX-100	NO/NC, 5 A / 240 V	
		PLC fuse monitor	**Description — mounts on left side, cannot be used with flange handle rod operator**	
		CCP2-PLC-100	Signal output 24 Vdc / 10 mA	

Ordering a complete switch installation

100 A CCP2 clockwise rotary switches

For a complete assembly, select from the following required and optional components, and accessories.

		Catalog no.		
		Switches	**Amps**	**Poles**
Required		**Right front rotary**		
		CCP2R-2-100CF	100	2
		CCP2R-3-100CF		3
		Left front rotary		
		CCP2RL-2-100CF	100	2
		CCP2RL-3-100CF		3
		Right side rotary		
		CCP2S-2-100CF	100	2
		CCP2S-3-100CF		3
		And		
		Rotary handles	**Description**	**Rating**
		CCP2-H4X-B1	Selector handle — black/grey	Type 1, 4X, 12
		CCP2-H4X-R1	Selector handle — red/yellow	
		CCP2-H4X-B2	Pistol handle — black/grey	
		CCP2-H4X-R2	Pistol handle — red/yellow	
		And		
		Shafts (8 mm)	**Length**	
		CCP2-SH1-290	290 mm	
		CCP2-SH1-490	490 mm	
		NFPA 79 compliant handle	**Color**	
		CCP2-NFPA-1	Red	
And				
Optional		**Multi-wire lug kits**	**Description**	
		CCP2-MW1-6	6-port multi-wire, 75°C Cu/Al, 6-14, includes terminal shrouds, pack of 3	

And			
Accessories		**Terminal shrouds**	**Description**
		CCP2-TS1-6	Pack of 3
		Auxiliary contacts	**Description — cannot be used on right front or right side operated switches**
		CCP2-AUX-100	NO/NC, 5 A / 240 V
		PLC fuse monitor	**Description — Cannot be used on left front or left side operated switches**
		CCP2-PLC-100	Signal output 24 Vdc / 10 mA

Ordering a complete switch installation

100 A CCP2 counterclockwise switches

For a complete assembly, select from the following required and optional components, and accessories.

Required		**Catalog no.**		
		Switches	**Amps**	**Poles**
		Left side rotary		
		CCP2SL-2-100CF	100	2
		CCP2SL-3-100CF		3
		And		
		Rotary handles	**Description**	**Rating**
		CCP2-H4X-B1L	Selector handle — black/grey	Type 1, 4X, 12
		CCP2-H4X-R1L	Selector handle — red/yellow	
		CCP2-H4X-B2L	Pistol handle — black/grey	
		CCP2-H4X-R2L	Pistol handle — red/yellow	
		And		
		Shafts (8 mm)	**Length**	
		CCP2-SH1-290	290 mm	
		CCP2-SH1-490	490 mm	
		NFPA 79 compliant handle	**Color**	
		CCP2-NFPA-1	Red	
And				
Optional		**Multi-wire lug kits**	**Description**	
		CCP2-MW1-6	6-port multi-wire, 75°C Cu/Al, 6-14, includes terminal shrouds, pack of 3	
And				
Accessories		**Terminal shrouds**	**Description**	
		CCP2-TS1-6	Pack of 3	
		Auxiliary contacts	**Description — mounts on right side**	
		CCP2-AUX-100	NO/NC, 5 A / 240 V	

About the UL Class CF CUBEFuse

The Bussmann series Low-Peak CUBEFuse is a UL Class CF current-limiting, dual-element, time-delay branch circuit fuse with Class J electrical performance. Available in indicating and non-indicating versions, this finger-safe fuse has a very compact, space-saving size and is easily applied using the CUBEFuse holder (TCFH_N), UL 98 Compact Circuit Protector switch (CCP2-_CF) or Compact Circuit Protector Base (CCP2B up to 100 A) used in the Quik-Spec Coordination Panelboard).

Ratings

- Volts
  - 600 Vac
  - 300 Vdc
- Amps
  - 6-400 A (indicating)
  - 1-400 A (non-indicating)
- Interrupting rating
  - 300 kA RMS Sym. (Up to 100 A UL)
  - 200 kA RMS Sym. (110 to 400 A UL)
  - 200 kA RMS Sym. (Up to 100 A CSA)
  - 100 kA DC (Up to 400 A UL and up to 100 A CSA)

Agency information

- UL Listed Class CF fuse: Guide JDDZ, File E4273 (up to 400 A)
- CSA® Certified fuse: Class 1422-02, File 053787_C_000 (up to 100 A)
- CE
- RoHS compliant

Catalog numbers (amps)

Indicating CUBEFuse				
TCF6	TCF30	TCF70	TCF150	TCF350
TCF10	TCF35	TCF80	TCF175	TCF400
TCF15	TCF40	TCF90	TCF200	
TCF17-1/2	TCF45	TCF100	TCF225	
TCF20	TCF50	TCF110	TCF250	
TCF25	TCF60	TCF125	TCF300	
Non-Indicating CUBEFuse				
TCF1RN	TCF20RN	TCF50RN	TCF110RN	TCF250RN
TCF3RN	TCF25RN	TCF60RN	TCF125RN	TCF300RN
TCF6RN	TCF30RN	TCF70RN	TCF150RN	TCF350RN
TCF10RN	TCF35RN	TCF80RN	TCF175RN	TCF400RN
TCF15RN	TCF40RN	TCF90RN	TCF200RN	
TCF17-1/2RN	TCF45RN	TCF100RN	TCF225RN	

Features

- Smallest installed footprint of any UL Class CC, J, or R fuse solution
- Easy application using CUBEFuse holders (TCFH_N), UL 98 Compact Circuit Protector (CCP2) switches and Compact Circuit Protector Base (CCP2B up to 100 A). See data sheet 9007 for details on the CUBEFuse holder, 10801 for details on the CCP2-_CF switch and 1161 for the CCP2B.
- Holders and switches have an amp rating rejection feature to help prevent overfusing; 30, 60 and 100 A switches and holders will hold any CUBEFuse up to its rating, 200 and 400 A switches and 200, 225 and 400 A holders will hold any CUBEFuse 110 A and above up to its rating
- UL Class CF with Class J time-delay electrical performance
- Available in indicating and non-indicating versions
- The indicating version features local *easy*ID™ open fuse technology for faster troubleshooting and reduced downtime
- Faster response to damaging faults helps reduce destructive thermal and magnetic forces
- True dual-element fuse construction with a minimum 10 seconds time-delay at 500% of rating
- Long time-delay minimizes nuisance openings caused by temporary overloads and transient surges
- Up to 300 kA interrupting rating safely interrupts virtually any fault
- Robust cycling and inrush current withstand
- Low let-through currents under fault conditions
- Provides Type 2 "No Damage" protection for IEC motor starters when properly sized
- Easy selective coordination with any other Bussmann series Low-Peak Class CC, J, L or RK1 fuse with simple 2:1 amp ratio between upstream and downstream fuses

* Finger-safe status depends on final, installed application, and will require using accessory shrouds for 110 to 400 A ratings.

CUBEFuse (cat. no. TCFH_N) holders

The CUBEFuse is also used in holders that can be dovetail together for the smallest footprint possible of any Class J fuse solution (see data sheet no. 9007 for details).

Finger-safe DIN-Rail or panel mount holders up to 100 A.

- 30 A holder accepts any CUBEFuse up to 30 A.
- 60 amp holder accepts any CUBEFuse up to 60 A.
- 100 amp holder accepts any CUBEFuse up to 100 A.

Panel mount holders from 200 to 400 A.

- 200 A holder accepts any CUBEFuse from 110 to 200 A
- 225 A* holder accepts any CUBEFuse from 110 to 225 A
- 400 A holder accepts any CUBEFuse from 110 to 400 A

Finger-safe installation achievable for three ganged holders and lug kits with shroud

* 200 A and 225 A holders share the same overall dimensions, but the 200 A holder will reject a 225 A fuse.

Ordering a complete switch installation

200 A CCP2 switches

For a complete installation, select from the following required and optional components, and accessories.

		Catalog no.			
		Switches	**Amps**	**Poles**	
Required		CCP2-1-200CF	200	1	
		CCP2-2-200CF		2	
		CCP2-3-200CF		3	
		And			
		Lug kits	**Description**		
		CCP2-L2-1	Stainless steel lug, 75° Cu only, 350 kcmil-4, 1 per pack		
		CCP2-L2-1A	Aluminum lug, 75°C Cu/Al, 350 kcmil-4, 1 per pack		
		CCP2-MW2-3	3-port multi-wire lug, 75°C Cu/Al, 2-14, 3 per pack, includes terminal shroud		
		CCP2-MW2-6	6-port multi-wire lug, 75°C Cu/Al, 6-14, 3 per pack, includes terminal shroud		
And					
Optional	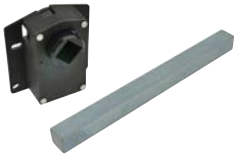	**Rotary mechanisms**	**Description**		
		CCP2-SM	Side rotary mechanism - mounts on left or right side of 1-, 2- and 3-pole switches		
		CCP2-RM2	Front rotary mechanism - mounts only on 3-pole switches, requires clockwise rotating handle		
		And			
		Rotary handles	**Description**	**Rotation - must match switch rotation**	**Rating**
		CCP2-H4X-B3	Short pistol handle — black/grey	Clockwise	Type 1, 4X, 12
		CCP2-H4X-R3	Short pistol handle — red/yellow	For use with front rotary mechanism or side rotary mechanism CCP2-SM on the switch's right side	
		CCP2-H4X-B4	Long pistol handle — black/grey		
		CCP2-H4X-R4	Long pistol handle — red/yellow		
		CCP2-H4X-B3L	Short pistol handle — black/grey	Counterclockwise	
		CCP2-H4X-R3L	Short pistol handle — red/yellow	Use **only** if installing side rotary mechanism CCP2-SM on the switch's left side	
		CCP2-H4X-B4L	Long pistol handle — black/grey		
		CCP2-H4X-R4L	Long pistol handle — red/yellow		
		And			
		Shafts (12 mm)	**Length**		
		CCP2-SH2-225	225 mm		
		CCP2-SH2-425	425 mm		
		NFPA 79 compliant handle	**Color**		
		CCP2-NFPA-2	Red		

Optional

Or		
Flange handle rod operator	**Description — 3-pole switches only, cannot be used with side or front rotary mechanisms**	**Rating**
CCP2-FLR2-21	Red/black, painted handle	Type 1, 3R and 12
CCP2-FLR2-21X	Chrome handle	Type 4X

Or		
Flange handle cable operator	**Description - 3-pole switches only, cannot be used with side or front rotary mechanisms**	**Rating**
CCP2-FLC2-36	36″ cable, red/black painted handle	Type 1, 3R and 12
CCP2-FLC2-36X	36″ cable, chrome handle	Type 4X
CCP2-FLC2-60	60″ cable, red/black painted handle	Type 1, 3R and 12
CCP2-FLC2-60X	60″ cable, chrome handle	Type 4X
CCP2-FLC2-120	120″ cable, red/black painted handle	Type 1, 3R and 12
CCP2-FLC2-120X	120″ cable, chrome handle	Type 4X

And

Accessories

Terminal shrouds	Description
CCP2-TS2-3	3-pole terminal shroud with phase shields, 1 per pack
Phase barriers	**Description**
CCP2-PB2	Phase barriers, 2 per pack

And

Control wire terminals	Description
CCP2-CWK2	1/4″ quick-connect control wire terminals - mounts on installed lug (cannot be used with lug CCP2-L2-1), 12 per pack

Auxiliary contacts	Description
CCP2-AUX-S	NO/NC, 5 A, 240 V - Can be mounted on right or left side

Handle extension	Description
CCP2-HEX	Handle extension to facilitate operating 1-, 2 and 3-pole switches. Cannot be used when side or front rotary mechanisms or flange handle rod or cable operators are installed.

Ordering a complete switch installation

400 A CCP2 switches

For a complete installation, select from the following required and optional components, and accessories.

		Catalog no.			
		Switches	**Amps**	**Poles**	
Required		CCP2-1-400CF	400	1	
		CCP2-2-400CF		2	
		CCP2-3-400CF		3	
		And			
		Lug kits	**Description**		
		CCP2-L4-1	Stainless steel lug, 75° Cu only, 500 kcmil-3, 1 per pack		
		CCP2-L4-1A	Aluminum lug, 75° Cu only, 500 kcmil-3, 1 per pack		
		CCP2-L4B-3	Stainless steel lug, 75° Cu only, 750-500 kcmil, 3 per pack, includes terminal shroud		
		CCP2-L4B-3A	Aluminum lug, 75°C Cu/Al, 750-500 kcmil, 3 per pack, includes terminal shroud		
		CCP2-MW6-6	6-port multi-wire lug, 75°C Cu/Al, 1/0-14, 3 per pack, includes terminal shroud		
		CCP2-L6-3	2-port stainless steel lug, 75° Cu only, 500 kcmil-2, 3 per pack, includes terminal shroud		
		CCP2-L6-3A	2-port aluminum lug kit, 75° Cu/Al only, 500 kcmil-2, 3 per pack, includes terminal shroud		
And					
Optional	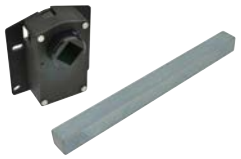	**Rotary mechanisms**	**Description**		
		CCP2-SM	Side rotary mechanism - mounts on left or right side of 1-, 2- and 3-pole switches		
		CCP2-RM4	Front rotary mechanism - mounts only on 3-pole switches, requires clockwise rotating handle		
		And			
		Rotary handles	**Description**	**Rotation - must match switch rotation**	**Rating**
		CCP2-H4X-B3	Short pistol handle — black/grey	Clockwise	Type 1, 4X, 12
		CCP2-H4X-R3	Short pistol handle — red/yellow	For use with front rotary mechanism or side rotary mechanism CCP2-SM on the switch's right side	
		CCP2-H4X-B4	Long pistol handle — black/grey		
		CCP2-H4X-R4	Long pistol handle — red/yellow		
		CCP2-H4X-B3L	Short pistol handle — black/grey	Counterclockwise	
		CCP2-H4X-R3L	Short pistol handle — red/yellow	Use **only** if installing side rotary mechanism CCP2-SM on the switch's left side	
		CCP2-H4X-B4L	Long pistol handle — black/grey		
		CCP2-H4X-R4L	Long pistol handle — red/yellow		
		And			
		Shafts (12 mm)	**Length**		
		CCP2-SH2-225	225 mm		
		CCP2-SH2-425	425 mm		
		NFPA 79 compliant handle	**Color**		
		CCP2-NFPA-2	Red		

Optional		Or		
		Flange handle rod operator	**Description - 3-pole switches only, cannot be used with side or front rotary mechanisms**	**Rating**
		CCP2-FLR2-21	Red/black, painted handle	Type 1, 3R, 12
		CCP2-FLR2-21X	Chrome handle	Type 4X
		Or		
		Flange handle cable operator	**Description - 3-pole switches only, cannot be used with side or front rotary mechanisms**	**Rating**
		CCP2-FLC2-36	36" cable, red/black painted handle	Type 1, 3R, 12
		CCP2-FLC2-36x	36" cable, chrome handle	Type 4X
		CCP2-FLC2-60	60" cable, red/black painted handle	Type 1, 3R, 12
		CCP2-FLC2-60x	60" cable, chrome handle	Type 4X
		CCP2-FLC2-120	120" cable, red/black painted handle	Type 1, 3R, 12
		CCP2-FLC2-120x	120" cable, chrome handle	Type 4X
And				
Accessories	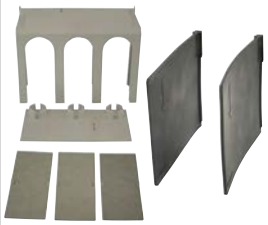	**Terminal shrouds**	**Description**	
		CCP2-TS6-3	3-pole terminal shroud with phase shields, 1 per pack	
		Phase barriers	**Description**	
		CCP2-PB6	Phase barriers, 2 per pack	
		And		
		Auxiliary contacts	**Description**	
		CCP2-AUX-S	NO/NC, 5 A, 240 V - Can be mounted on right or left side	
		Handle extension	**Description**	
		CCP2-HEX	Handle extension to facilitate operating 1-, 2 and 3-pole switches. Cannot be used when side or front rotary mechanisms, or flange handle rod and cable mechanisms are installed.	

CUBEFuse Compact Circuit Protector Base

RoHS 2011/65/EU

1-Pole	2-Pole	3-pole
CCP2B-1-_CF	CCP2B-2-_CF	CCP2B-3-_CF

Description

The revolutionary Bussmann series Compact Circuit Protector Base (CCP2B) with CUBEFus™ is a UL 98 horsepower rated fused branch circuit disconnect. Primarily used in the Bussmann series Quik-Spec™ Coordination Panelboard, the CCP2B with CUBEFuse simplifies selective coordination for code complaince along with a lockout/tagout feature for isolating individual branch circuit loads to promote safe work practices.

Features

- Uses finger-safe, current-limiting Class CF CUBEFuse with Class J performance available, time-delay or fast-acting versions from 1 to 100 amps
- Patented amp rating rejection feature helps prevent overfusing
- High 200 kA short-circuit current rating
- Disconnect rated to provide a means for load isolation
- 2- and 3-pole versions full voltage rated at 600 Vac
- Up to 125 Vdc ratings
- UL 98 Listed for branch circuit disconnect
- 1-, 2- and 3-pole versions are horsepower rated
- Listed to UL and cULus
- Open fuse indication lamp per pole speeds troubleshooting
- Additional open fuse indication can be provided by using the time-delay indicating CUBEFuse in ratings from 6 to 100 A
- Built-in switch/fuse interlock prevents removing or installing a fuse while energized
- Permanent lockout/tagout and lock-on provision usign a 1/4" lock

Specifications:

Switch amp ratings and rejection breaks

- 15, 20, 30, 40, 50, 60, 70, 90 and 100 A

Poles

- 1-, 2- and 3-poles

Volts

- 600 Vac (or less)
- 125 Vdc*

* Switch amp rating and installed fuse amp rating dependent, see catalog number table for details.

Agency information

- UL 98 Listed, Guide WHTY, File E302370
- cULus to Canadian Standard 22.2 No. 4, Guide WHTY7, File E302370
- RoHS compliant
- CE

Lineside bolt-on bus connector and torque

- Bolt-mounted design into Quik-Spec Coordination Panelboard bus
- #10-32 UNC hex flange Phillips screw; 2.8 N•m (25 lb-In)

Loadside box lug terminal conductor data

- See conductor table for details

Loadside fork terminal

- Max. 30 A suitable for use with #8-32 UNC screw

Lockout/tagout

- 1/4" lock

Local open fuse indication

- Light illumination requires closed circuit and minimum 90 volts

Carton quantity and shipping weight

Item	Poles	lbs (kg)
up to 60 amp switches	6	1.7 (0.77)
70 to 100 amp switches	6	2.6 (1.18)

Environmental data

- Storage and operating temperature -20°C to 75°C**

**For fuse performance under or above 25°C, consult fuse performance derating charts.

Available Bussmann series fuses

UL fuse class	Type/description	Volts	Data sheet no.
CF	Indicating time-delay, Low-Peak CUBEFuse (6-100 A)	600 Vac/ 300 Vdc	9000
	Non-indicating time-delay, Low-Peak CUBEFuse (1-100 A)		
	Non-indicating fast-acting CUBEFuse (1-100 A)	600 Vac/dc	2147

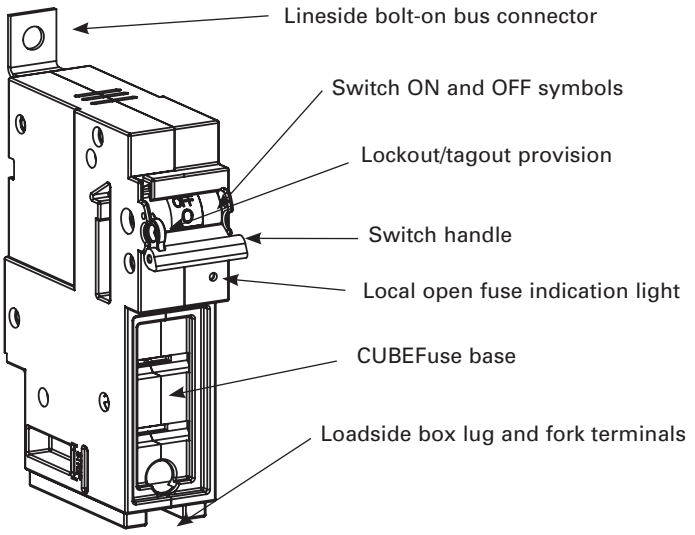

Data sheet no: 1161

Catalog numbers and ratings

Catalog numbers	Poles	Voltage ratings	Accepts CUBEFuse amp range	SCCR	Hp ratings (Vac)†††
CCP2B-1-15CF	1	347 Vac, 125 Vdc	1 to 15	200 kA AC 100 kA DC	0.5 Hp @ 120 V
CCP2B-2-15CF	2	600 Vac, 125 Vdc			1.5 Hp @ 240 V
CCP2B-3-15CF	3	600 Vac			3 Hp @ 240 V 5 Hp @ 480 V 7.5 Hp @ 600 V
CCP2B-1-20CF	1	347 Vac, 125 Vdc	1 to 20		0.75 Hp @ 120 V
CCP2B-2-20CF	2	600 Vac, 125 Vdc			2 Hp @ 240 V
CCP2B-3-20CF	3	600 Vac			3 Hp @ 240 V 7.5 Hp @ 480 V 10 Hp @ 600 V
CCP2B-1-30CF	1	347 Vac, 125 Vdc	1 to 30		1.5 Hp @ 120 V
CCP2B-2-30CF	2	600 Vac, 125 Vdc			3 Hp @ 240 V
CCP2B-3-30CF	3	600 Vac			5 Hp @ 240 V 15 Hp @ 480 V 10 Hp @ 600 V
CCP2B-1-40CF	1	347 Vac, 125 Vdc	1 to 40		2.0 Hp @ 120 V
CCP2B-2-40CF	2	600 Vac, 125 Vdc			3 Hp @ 240 V
CCP2B-3-40CF	3	600 Vac			7.5 Hp @ 240 V 20 Hp @ 480 V 10 Hp @ 600 V
CCP2B-1-50CF	1	347 Vac, 125 Vdc*	1 to 50		3.0 Hp @ 120 V
CCP2B-2-50CF	2	600 Vac, 125 Vdc*			5 Hp @ 240 V
CCP2B-3-50CF	3	600 Vac			7.5 Hp @ 240 V 20 Hp @ 480 V 10 Hp @ 600 V
CCP2B-1-60CF	1	347 Vac, 125 Vdc*	1 to 60		3.0 Hp @ 120 V
CCP2B-2-60CF	2	600 Vac, 125 Vdc*			7.5 Hp @ 240 V
CCP2B-3-60CF	3	600 Vac			7.5 Hp @ 240 V 20 Hp @ 480 V 10 Hp @ 600 V
CCP2B-1-70CF	1	347 Vac, 125 Vdc	1 to 70		3.0 Hp @ 120 V
CCP2B-2-70CF	2	600 Vac, 125 Vdc			7.5 Hp @ 240 V
CCP2B-3-70CF	3	600 Vac			15 Hp @ 240 V 30 Hp @ 480 V 40 Hp @ 600 V
CCP2B-1-90CF	1	347 Vac, 125 Vdc**	1 to 90		5.0 Hp @ 120 V
CCP2B-2-90CF	2	600 Vac, 125 Vdc**			10 Hp @ 240 V
CCP2B-3-90CF	3	600 Vac			20 Hp @ 240 V 50 Hp @ 480 V 40 Hp @ 600 V
CCP2B-1-100CF	1	347 Vac, 125 Vdc**	1 to 100		5.0 Hp @ 120 V
CCP2B-2-100CF	2	600 Vac, 125 Vdc**			10 Hp @ 240 V
CCP2B-3-100CF	3	600 Vac			20 Hp @ 240 V 50 Hp @ 480 V 40 Hp @ 600 V

† 1 and 3 A indicating CUBEFuse not available. Correct fit with CCP2B disconnect requires indicating CUBEFuse with date code R38 or later.
†† Not for use with motors.
††† Indicating or non-indicating time-delay CUBEFuse only.
* 125 Vdc for installed fuse amp ratings up to 40 A. 24 Vdc for installed fuse amp ratings from 45 to 60 A.
** 125 Vdc for installed fuse amp ratings up to 80 A, 24 Vdc for installed fuse amp ratings from 90 to 100 A.

Data sheet no: 1161

Box lug conductor data

Wire type	AWG range	Class	Quantity	Torque N•m (lb-in)
15 to 60 A switches				
75°C Cu	4-6	Stranded, Class B to K	Single	3.95 (35)
	8-18			2.26 (20)
	6-8	Stranded, Class B/C	Dual	3.39 (30)
		Stranded, Class K		2.26 (20)
	10-18	Stranded, Class B to K		
	10-18	Solid	Single/dual	2.26 (20)
	4-18	Stranded, UL ferrule, Class B/C	Single	3.39 (30)
	6-18		Twin†	
	4-18	Stranded, UL ferrule, Class K	Single	2.82 (25)
	6-18		Twin†	
70 to 100 A switches				
75°C Cu	12-18	Stranded, Class B to K	Single	2.26 (20)
	10			2.82 (25)
	8			4.52 (40
	4-6			5.08 (45)
	1-3			6.21 (55)
	3-12	Stranded, Class B to K	Dual	3.95 (35)
	12-18	Stranded, UL ferrule, Class B/C	Single	2.26 (20)
	10			3.95 (35)
	1-8			4.52 (40)
	10-18		Twin†	2.26 (20)
	6-8			2.82 (25)
	10-18	Solid	Single	2.26 (20)
	10-18		Dual	2.26 (20)
	8-18	Class K	Single	2.26 (20)
	1-6			3.39 (30)
	3-10		Dual	5.08 (45)
	8-18	Class K, UL ferrule	Single	2.26 (20)
	1-6			3.39 (30)
	6-18		Twin	2.26 (20)

† Two stranded conductors placed in one UL Listed twin ferrule.

Dimensions — in (mm)

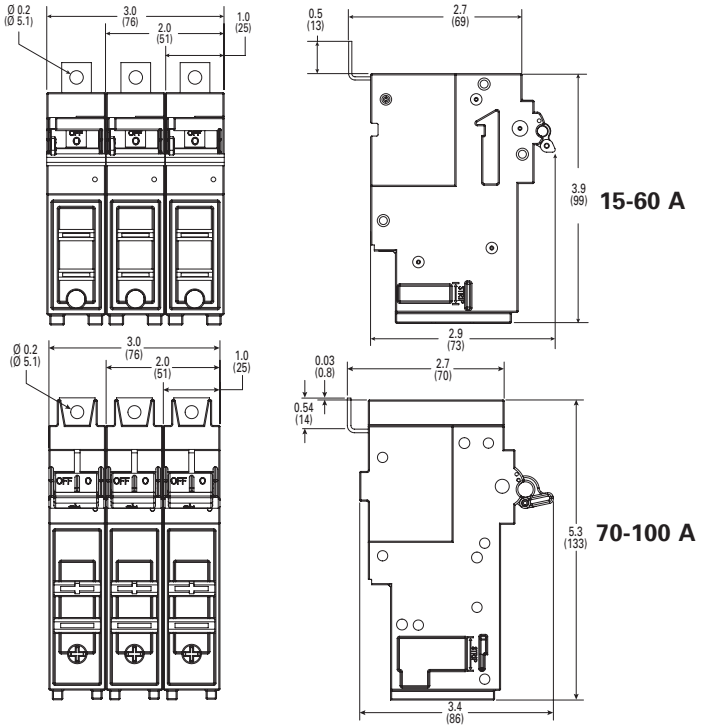

For details on the CCP2B and its use in the Quik-Spec Coordination Panelboard, see data sheet no. 1160.

Disconnect switches

Compact Circuit Protector (cat. no. CCP2)

For use with Class CC, Supplemental and IEC 10x38 mm fuses

CCP2 switch

Class CC and midget CCP contents **Section page**

Description and specifications 39-40
Catalog numbers 41
Conductor information and available fuses 42
Dimensions 42
Accessories
Multi-wire lug kit 43
Selector and pistol handles 44
NFPA 79 compliant handle 44
Shafts 44
Auxiliary contacts 45
PLC fuse monitor 46-47
How to order tables
Clockwise rotary operated switches 48-49
Switches only 50
Counterclockwise rotary operates switches 51

CCP2 right front rotary switch

CCP2 left front rotary switch

CCP2 right side rotary switch

CCP2 left side rotary switch

Catalog symbols

Symbol	Fuse type	Description
CCP2-(poles)-30CC	Class CC	Switch only
CCP2-(poles)-30M	UL sup./IEC 10x38	
CCP2-1-DCC	Class CC Vdc	1-pole switch only
CCP2-1-DCM	UL sup./IEC 10x38 Vdc	
CCP2R-(pole)-30CC	Class CC	Right front rotary switch
CCP2R-(pole)-30M	UL sup./IEC 10x38	
CCP2RL-(pole)-30CC	Class CC	Left front rotary switch
CCP2RL-(pole)-30M	UL sup./IEC 10x38	
CCP2S-(pole)-30CC	Class CC	Right side rotary switch
CCP2S-(pole)-30M	UL sup./IEC 10x38	
CCP2SL-(pole)-30CC	Class CC	Left side rotary switch
CCP2SL-(pole)-30M	UL sup./IEC 10x38	

Description

The revolutionary next generation Bussmann™ series Compact Circuit Protector (cat. no. CCP2) fused disconnect switch is 3/5 the footprint of a traditional fusible switch and provides up to a high 200 kA Short-Circuit Current Rating (SCCR) to help improve panel and assembly SCCR.

The 35 mm DIN-Rail mount CCP is available in a variety of configurations to meet many application needs including rotary operation.

Application flexibility is extended with an optional multi-wire lug kit, with finger-safe shrouds, that provides three additional wire ports on each pole for power distribution applications.

Other accessories include a PLC interface device for open fuse monitoring and NO/NC auxiliary contacts that easily integrate into many monitoring systems.

Front and side rotary operated versions are easily applied for through-the-door or through the left or right side operation to enhance safety.

Ratings

- Volts
  - 600 Vac (UL® Class CC)
  - 240 Vac (UL Supplemental)
  - 400 Vac (IEC 10x38 mm)
  - 80 Vdc (DC Class CC, DC UL Supplemental/IEC)
- Amps
  - 30 A (UL)
  - 32 A (IEC)
- SCCR
  - 200 kA (UL Class CC)
  - 10 kA (UL Supplemental)
  - 120 kA (IEC 10x38 mm max)
  - 20 kA (DC Class CC/UL)
  - 10 kA (DC UL Supplemental/IEC)

Poles

- 1-, 2- and 3-poles catalog number dependent

Agency information

- UL Class CC fuse versions
  - UL 98 Listed, Guide WHTY, File E302370
  - cULus to Canadian Standard 22.2 No. 4-04, UL Guide WHTY7, File 302370
- UL Supplemental and IEC 10x38 mm fuse versions
  - UL 508 Listed, Guide NRNT, File E320230
  - cULus Certified 22.2 No. 14-05
  - IEC 60947-3 AC-23A
- DC voltage UL Class CC version (CCP2-1-DCC)
  - UL 508 Listed, cULus 22.2, No. 1405
- DC IEC 10x38 version (CCP2-1-DCM)
  - IEC 60947-3, DC-23A
- RoHS compliant
- CE

Conductors/terminals

- 75°C Cu/Al, see conductor tables for size, type and torque information
- Box lug, single/dual conductor
- Fork terminal suitable for line, load or accessory connection
- Multi-wire lug kit — see accessories for details

Storage and operating temperature

- - 20°C to 75°C (-4°F to 167°F)*

* For fuse performance under or above 25°C, consult fuse performance derating charts in the Bussmann Division publication no. 3002, titled Selecting Protective Devices (SPD)

Lockout/tagout provisions

- Switch only — 4 mm lock or Brady pin-out device part number 90850
- Switch with rotary operating mechanism — 1/4″ lock

Minimum enclosure size

- 10″ x 8″ x 6″ (254 x 203 x 152 mm)

Mounting

- 35 mm DIN-Rail

Local open fuse indication minimum voltage**

- 90 Vac for AC switches
- 12 Vdc for DC switches

** Open fuse indication requires an open fuse to be in the CCP2 and the switch in the ON position.

Accessories

- Multi-wire lug kit with terminal shrouds
- Selector and pistol handles for use with rotary operated switches
- 8 mm shafts for use with selector and pistol handles
- Auxiliary contacts
- PLC fuse monitor

Features

- Extremely compact (18 mm wide per pole) design
- High SCCR up to 200 kA (UL Class CC) and 120 kA (IEC)
- Disconnect rated for load isolation
- Full voltage rated up to 600 Vac or 80 Vdc
- UL 98 Listed Class CC version is horsepower rated and suitable for branch circuit protection and disconnect
- IEC 10x38 version complies with IEC 60947-3 and suitable for branch circuit protection and disconnect
- Suitable for global installations, the switches comply with UL, cULus and IEC standards accepting UL Class CC, Supplemental or IEC aM and gG/gL fuses
- Open fuse indication
  - Standard local open fuse indicating light for each pole
  - Optional PLC fuse monitor can be utilized to signal a PLC and open a contactor to de-energize all phases, if required
- IP20 finger-safe with 10 AWG (6 mm^2) or larger wire (box lug terminals only)
- Built-in switch interlock prohibits removing the fuse under load
- Padlockable handle for lockout/tagout
  - 4 mm lock for switch only
  - 1/4″ lock for rotary operated switches
- Rotary operated versions provide for through-the-door and through-the-side operation flexibility and enhanced safety with:
  - Right front switch operation
  - Left front switch operation
  - Right side switch operation
  - Left side switch operation
- Optional selector and pistol handles available for use with rotary operated versions
- Multi-wire lug kit with terminal shrouds allows for power distribution to multiple loads. Each lug has three ports rated for single and dual wires (see lug kit in accessories for conductor and torque details).

Right front rotary operated CCP2 switch with PLC fuse monitor.

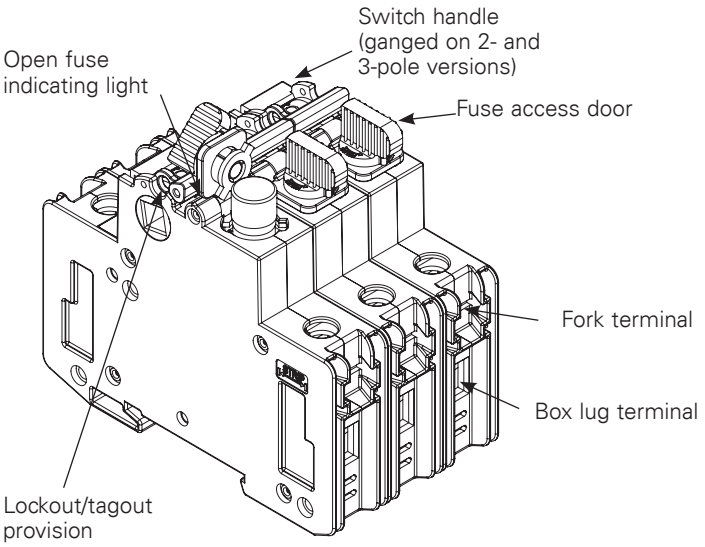

Rotary operating switch versions

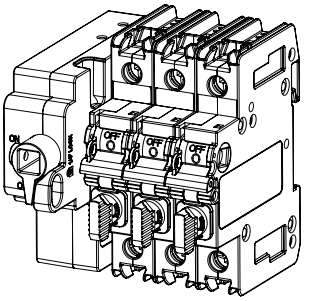

Left front rotary switch
Clockwise operating handles

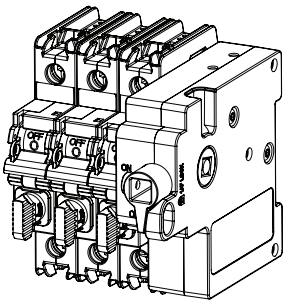

Right front rotary switch
Clockwise operating handles

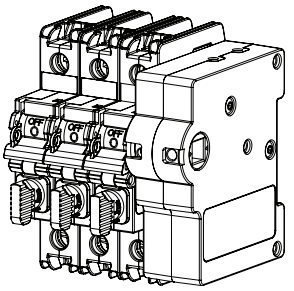

Right side rotary switch
Clockwise operating handles

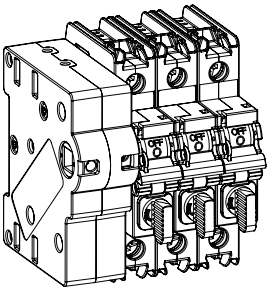

Left side rotary switch
Counterclockwise operating handles

Catalog numbers

Catalog no.	Poles	Description	Amps	Volts	SCCR	Max horsepower rating (Vac) 120	240	480	600	Wire type/ size*
Class CC										
CCP2-1-30CC	1	Switch only	30 A	347 Vac	200 kA	1/2	—	—	—	75°C Cu/Al 18-4 AWG Fork terminal††
CCP2-2-30CC	2			600 Vac		—	2	—	—	
CCP2-3-30CC	3					3/4	3	5	7.5	
CCP2R-2-30CC	2	Switch with right front rotary operation		600 Vac		—	2			
CCP2R-3-30CC	3					3/4	3	5	7.5	
CCP2RL-2-30CC	2	Switch with left front rotary operation		600 Vac		—	2	—	—	
CCP2RL-3-30CC	3					3/4	3	5	7.5	
CCP2S-2-30CC	2	Switch with right side rotary operation		600 Vac		—	2	—	—	
CCP2S-3-30CC	3					3/4	3	5	7.5	
CCP2SL-2-30CC	2	Switch with left side rotary operation		600 Vac		—	2	—	—	
CCP2SL-3-30CC	3					3/4	3	5	7.5	
UL Supplemental and IEC 10x38 mm										
CCP2-1-30M	1	Switch only	UL 30 A IEC 32 A**	UL 240 Vac† IEC 400 Vac†	UL 10 kA† IEC 120 kA†	—	—	—	—	75°C Cu/Al 18-4 AWG Fork terminal††
CCP2-2-30M	2									
CCP2-3-30M	3									
CCP2R-2-30M	2	Switch with right front rotary operation								
CCP2R-3-30M	3									
CCP2RL-2-30M	2	Switch with left front rotary operation								
CCP2RL-3-30M	3									
CCP2S-2-30M	2	Switch with right side rotary operation								
CCP2S-3-30M	3									
CCP2SL-2-30M	2	Switch with left side rotary operation								
CCP2SL-3-30M	3									
Single-pole DC switches										
CCP2-1-DCC	1	UL Class CC	30 A	80 Vdc†	20 kA†	—	—	—	—	75°C Cu/Al 18-4 AWG Fork terminal††
CCP2-1-DCM	1	UL supplemental	30 A	80 Vdc†	10 kA†	—	—	—	—	
		IEC 10x38	32 A**							

* See box lug terminal conductor data table for details.
**32 A Class aM, 25 A Class gG.
† SCCR may be lower, refer to installed fuse data sheet for interrupting rating at applied voltage.
††Fork terminal with a 4.3 mm gap for a #8-32 stud, 30 A max, insulated flange, wire size 12-10 AWG.

Box lug terminal conductor data

Type	AWG range	Class	Quantity	Torque N•m (lb-in)
Cu	4-18	Stranded, Class B to K	Single	2.26 (20)
	6-8	Stranded, Class B/C	Dual	3.39 (30)
	6-8	Stranded, Class K	Dual	2.26 (20)
	10-18	Stranded, Class B to K		
	10-18	Solid	Single/dual	
	4-18	Stranded, UL ferrule, Class B/C	Single	3.39 (30)
	6-18		Twin†	
	4-18	Stranded, UL ferrule, Class K	Single	2.82 (25)
	6-18		Twin†	
Al	4-8	Stranded	Single	2.26 (20)
	6		Dual	2.82 (25)
	8			2.26 (20)

† Two stranded conductors placed in one UL Listed twin ferrule.

Available Bussmann series fuses

Fuse class	Type/description	Volts	Data sheet no.
CC	LP-CC time-delay	600 Vac/300 Vdc*	1023
	FNQ-R time-delay	600 Vac/300 Vdc	1014
	KTK-R fast-acting	600 Vac	1015
M	FNM time-delay	250 Vac	2028
	FNQ time-delay	500 Vac	1012
	KTK fast-acting	600 Vac	1011
	BAF fast-acting	250 Vac	2011
	KLM fast-acting	600 Vac/dc	2020
gG/gL	C10G	500 V (400 V@32 A)	720115
aM	C10M	500 V (400 V@20@25 A)	720115

* 1/2 to 2-1/2 and 20 to 30 A are 300 Vdc, 2-8/10 to 15 A are 150 Vdc.

Dimensions – mm (in)

Switch

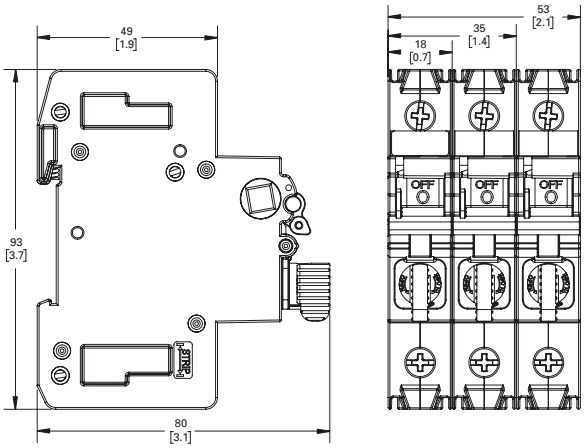

Left front and right front rotary switches

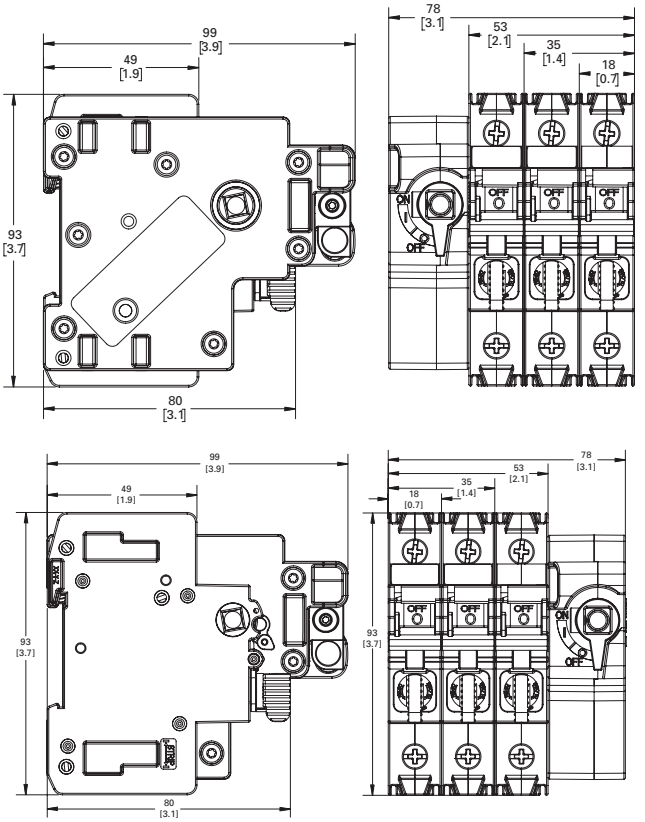

Left side and right side rotary switches

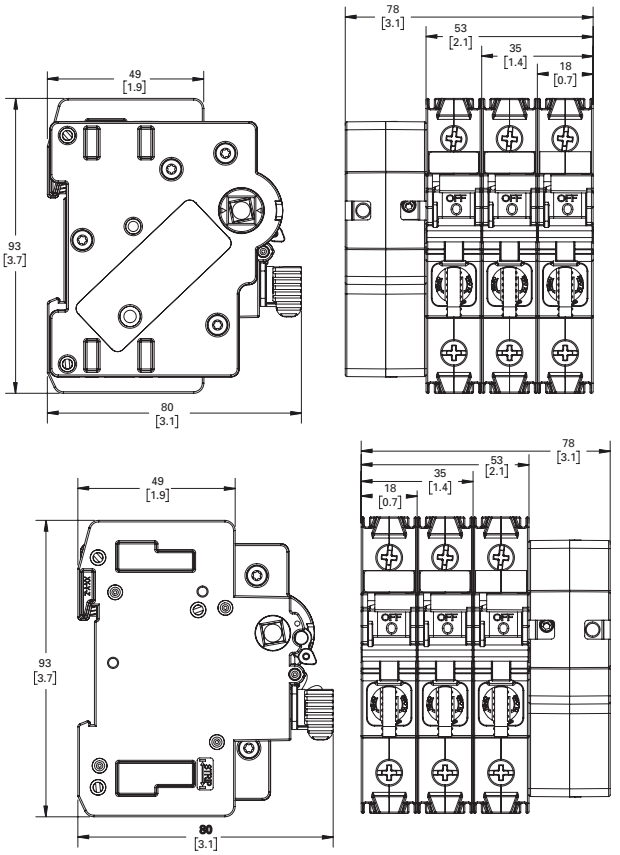

Multi-wire lug kit

Catalog number

- CCP2-MW1-3

Description

The multi-wire lug kit permits expanding each box lug terminal on the switch into a three-port terminal for power distribution applications.

Each multi-wire lug kit comes with three (3) three-port lugs and three terminal shrouds. Shrouds provide finger-safe protection when properly installed.

Lugs may be mounted on either the loadside or lineside to meet various application needs.

Ports on any one lug accept any conductor combination listed, e.g., one of the three ports may have dual 14 AWG wires and the other two ports single 10 AWG wires.

Ratings

- Volts 600 V
- Amps 60 A max
- SCCR 200 kA

Agency information

- UL Recognized (lug only)
- RoHS compliant

Storage and operating temperature

- - 20°C to 75°C (-4°F to 167°F)

Multi-wire lug conductor information

- 75°C Cu/AL
- AWG size and quantity per port - see table below

Type	AWG range	Class	Quantity	Torque N•m (lb-in)
Cu/Al	4-6	Stranded, Class B/C	Single	3.95 (35)
	8			2.82 (25)
Cu	10-14	Stranded, Class B/C	Single/dual*	2.26 (20)
	10-14	Solid	Single	2.26 (20)
	8	UL ferrule, Class B to K	Single/twin†	2.82 (25)
	10-14			2.26 (20)

* Dual wire to be same size and type.
† Two stranded conductors placed in one UL Listed twin ferrule.

CCP2 box lug torque for multi-wire lug

- 4.52 N•m (40 lb-in)

Terminal shroud accessory

Terminal shrouds are available without multi-wire terminals.

Catalog no.	Description
CCP2-TS1-3	Pack of three

Installed on CCP2-3-xx

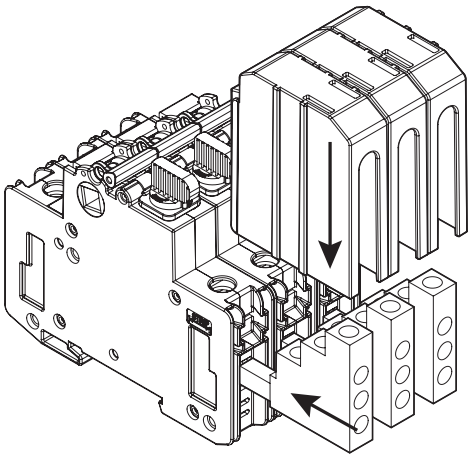

Multi-wire lugs mount in switch box lug terminals to provide three additional wire ports per pole. Lugs can be mounted on the switch lineside or loadside. Each multi-wire lug kit comes with three lugs and three shrouds.

Wire insulation strip lengths

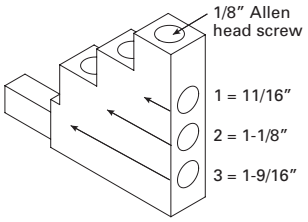

Strip back wire insulation to the lengths as indicated in the illustration above and the table below.

Lug port	Strip wire insulation back (inch)
1	11/16
2	1-1/8
3	1-9/16

Wiring versatility is provided by single/dual rated box lug terminals on the switch, or by the three-port multi-wire lug kit that's also single/dual wire rated.

Selector and pistol handles

Catalog symbol

- CCP2-H4X-_

Description

Selector and pistol handles for use with any 2- and 3-pole CCP2 rotary operated switch. Both selector and pistol handles are available in black/grey and red/yellow colors and clockwise/counterclockwise operating modes. Applying clockwise and counterclockwise operation depends upon the CCP2 rotary switch configuration. Installation requires an 8 mm shaft (ordered separately).

Each handle is rated NEMA 4X and capable of accepting up to three (3) 1/4" diameter shank locks for lockout/tagout in the OFF position. They can also be field configured for lock-on.

In application, only the clockwise operating handles in combination with either the left front or right front rotary switches provide a door interlock means to ensure the enclosure door remains shut during lockout/tagout or lock-on. Both clockwise and counterclockwise operating handles when mounted on the enclosure's left or right side do NOT provide a door interlock means.

See the catalog number table below for applicable rotary switch, handle and shaft combinations.

Agency information

- UL Listed, Guide DIHS, File E140305
- NEMA 4X rating
- RoHS compliant
- CE

Storage and operating temperature

- -20°C to 75°C (-4°F to 167°F)

Packaging

- Each handle is packaged individually

Handle shafts

Catalog symbol

- CCP2-SH1-_

Description

Eight millimeter square shafts available in 290 and 490 millimeter (11.5 and 19.3 inch) lengths. Shafts are indexed to ensure handle/switch orientation for correct operation. Shafts are cut to length when installed.

Packaging

- Each shaft is packaged separately

Selector handles

Pistol handles

Handle shafts

NFPA 79 compliant handle

Catalog number

- CCP2-NFPA-1

Description

NFPA 79 compliant handle mounts on the shaft of front rotary operated switch installations and provide a lockout means independent of the door position.

For these switch catalog numbers	Description/operation	Order these handle catalog numbers (description)	Order either shaft catalog number
CCP2R-(pole)-30CC	Right front rotary, clockwise	• CCP2-H4X-B1 (selector, black/grey) • CCP2-H4X-R1(selector, red/yellow) • CCP2-H4X-B2 (pistol, black/grey) • CCP2-H4X-R2 (pistol, red/yellow)	• CCP2-SH1-290 (11.5"/290 mm) • CCP2-SH1-490 (19.3"/490 mm)
CCP2R-(pole)-30M			
CCP2RL-(pole)-30CC	Left front rotary, clockwise		
CCP2RL-(pole)-30M			
CCP2S-(pole)-30CC	Right side rotary, clockwise		
CCP2S-(pole)-30M			
CCP2SL-(pole)-30CC	Left side rotary, counterclockwise	• CCP2-H4X-B1L (selector, black/grey) • CCP2-H4X-R1L (selector, red/yellow) • CCP2-H4X-B2L (pistol, black/grey) • CCP2-H4X-R2L (pistol, red/yellow)	
CCP2SL-(pole)-30M			

Auxiliary contacts

Catalog number

- CCP2-AUX

Description

NO+NC contact output to indicate the switching mechanism status on the CCP2. A single unit can be mounted on any 1-, 2- or 3-pole CCP2 switch and the left front/left side rotary operated switches.

Ratings

- Amps up to 5 A
- Volts up to 240 Vac
- NC/NO contacts are closed/open when the CCP2 switch is in the "ON" position (closed)

Description	Max per CCP2*	Signal output
Auxiliary contacts NO+NC for switch status	1 per CCP2 (1-, 2- or 3-pole)	5 A / 240 Vac

* The CCP2-AUX CANNOT be mounted on the right front and right side rotary operated versions.
De-energize all circuits and follow all prevailing safety procedures before installing or removing the CCP2-AUX.

Agency information

- UL 98 Recognized, Guide WHTY2, File E155130
- cURus to Canadian Standard 22.2 No. 4-04
- IP20 finger-safe in installed state
- RoHS compliant
- CE

Wiring

- 75°C Cu, 20-16 AWG (0.5 to 1.5 mm²) wire
- Torque 0.56 N•m (5 lb-in)

Packaging

- The CCP2-AUX is packaged individually

Installation technique

- Mounts on the CCP2's right side ONLY and mechanically interlocks with the CCP2 switch handle with provided hardware. The CCP2-AUX CANNOT be mounted on the right front and right side rotary operated versions.

Storage and operating temperature

- -20°C to 75°C (-4°F to 167°F)

Installed on a CCP2-3-xx

Note: CCP2-AUX **CANNOT** be mounted on the right front and right side rotary operated versions.

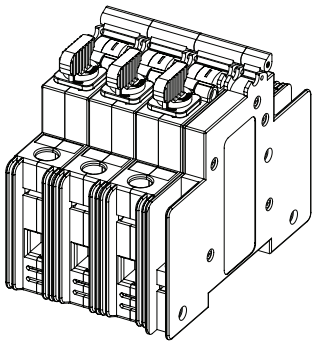

Dimensions — in

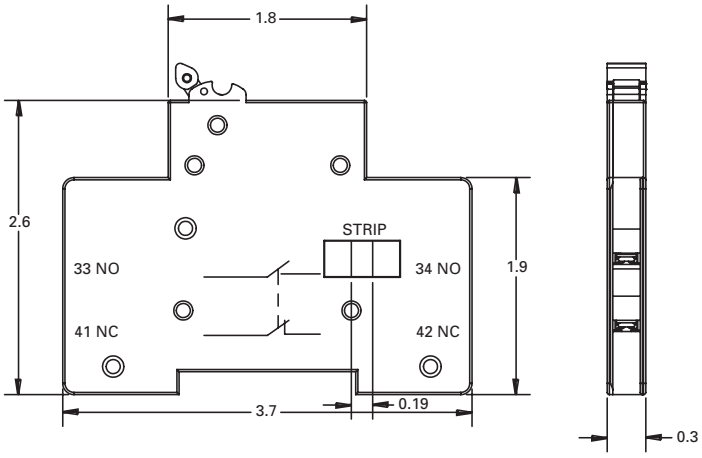

CCP2-AUX auxiliary contacts mounted on a 3-pole CCP2 switch.

PLC fuse monitor

Catalog number

- CCP2-PLC-IND

Description

A resettable three-phase fuse monitor that integrates with the I/O card in a Programmable Logic Controller (PLC). A single unit can be mounted on any 1-, 2- or 3-pole CCP2 switch and the right front/ right side rotary operated switches. A single unit monitors up to three phases. When used on 1- and 2-pole switches unused conductor(s) are removed after installation.

The CCP2-PLC-IND **CANNOT** be mounted on the left front/left side rotary operated versions or if the multi-wire lug kit is installed.

Ratings

- Signal output to PLC*
  - +24 Vdc, 10 mA max
- Output signals
  - Digital 0 Vdc (low), 24 Vdc max (high)
  - 0 Vdc Low – fuse is good
  - 24 Vdc High – fuse has opened

* When the fuse opens, the output signal is sent high and will remain high until the unit is reset.

Emissions and immunity testing

- IEC 60947-1: Voltage Switchgear and Control Gear
- IEC 61000-6-2: Electromagnetic Compatibility (EMC)
  - IEC 61000-4-2: Electrostatic Discharge Immunity - Test at level 3 (6 kV-Contact Discharge) and level 2 (4 kV-Air Discharge)
  - IEC 61000-4-3: Electromagnetic Compatibility - Radiated, Radio-frequency, Electromagnetic Field Immunity test at level x (20 V/m)
  - IEC 61000-4-4: Electromagnetic Compatibility - Testing and Measurement Techniques at level 3 (± 2 kV - Power Port and ±1 kV - I/O Ports)
  - IEC 61000-4-5: Electromagnetic Compatibility - Surge Immunity test at level 4 (±4 kV)
  - IEC 61000-4-6: Immunity to Conducted Disturbances at level 3 (10 V)

Description	Max per CCP2**	Signal output to PLC	Min. circuit volts
Wired remote fuse indication for PLC applications	1 per CCP2 (1, 2- or 3-pole)	24 Vdc/ 10 mA	100 Vac

**The CCP2-PLC-IND CANNOT be mounted on the left front/left side rotary operated versions or if the multi-wire lug kit is installed.

De-energize all circuits and follow all prescribed safety procedures before installing or removing the CCP2-PLC-IND.

Agency information

- UL 98 Recognized, Guide WHTY2, File E155130
- cURus to Canadian, Standard 22.2 No. 4-04

Local indication

- Two distinct LEDs indicate unit power (green) and open fuse (red). Open fuse LED is resettable upon fuse replacement and actuating the reset switch.

Wiring

- For power, signal and ground connections use shielded twisted pair 22-24 AWG (0.34-0.25 mm^2) 300 V rated wire

Packaging

- The CCP2-PLC-IND is packaged individually
- Includes 0.110" (2.8 mm) quick connects for power, signal and ground connections

Installation technique

- Mounts on the left side ONLY of the CCP2 and mechanically interlocks with the CCP2 switch handle with hardware provided. The CCP2-PLC-IND **CANNOT** be mounted on the left front/ left side rotary operated versions or if the multi-wire lug kit is installed.

IP20 rating — yes

Storage and operating temperature

- -20°C to 75°C (-4°F to 167°F)

PLC programming

- The CCP2-PLC-IND signal line is designed to provide a digital input to a PLC I/O card. In this case, a Programmable Logic Control program must be written to properly interpret the input signal to the PLC. The PLC program should check for consecutive high signals before taking action on a critical process.

Installed on a CCP2-3-xx

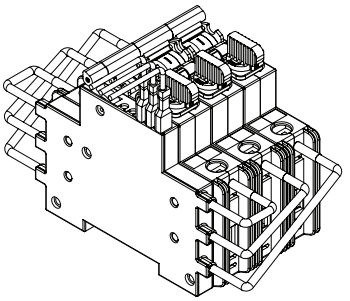

CCP2-PLC-IND mounted on a 3-pole switch and using the fork terminals. When mounted on a 2- or 1-pole switch, remove unused leads.

Note: The CCP2-PLC-IND **CANNOT** be mounted on the left front/left side rotary operated versions or if the multi-wire lug kit is installed.

CCP2-PLC-IND fuse monitor mounted on a right front rotary operated switch.

PLC wiring schematic

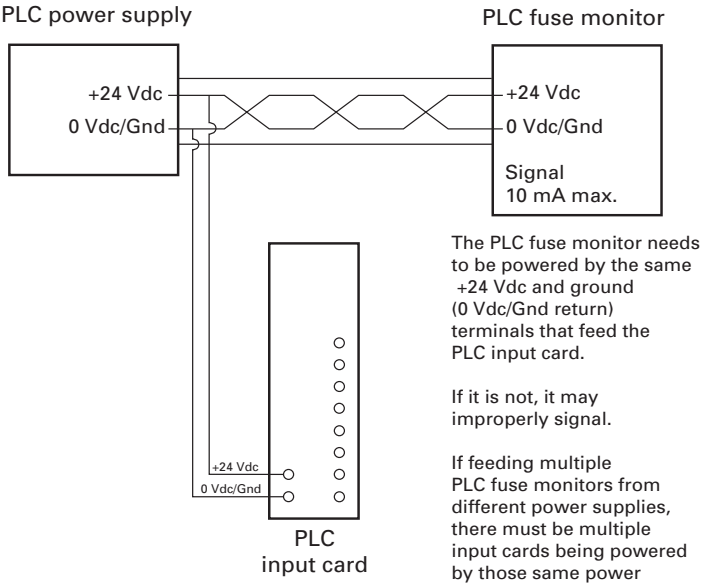

The PLC fuse monitor needs to be powered by the same +24 Vdc and ground (0 Vdc/Gnd return) terminals that feed the PLC input card.

If it is not, it may improperly signal.

If feeding multiple PLC fuse monitors from different power supplies, there must be multiple input cards being powered by those same power supplies as well.

CCP2-PLC-IND connections from a CCP2-3-xx to a remote monitoring device

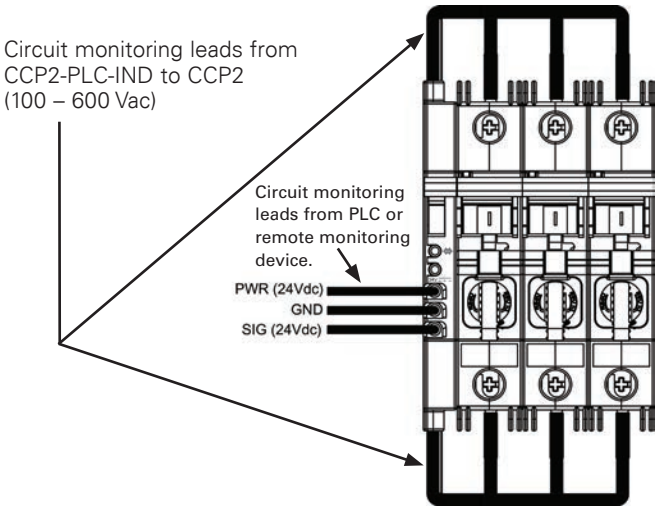

Connection from CCP2-PLC-IND to CCP2-3-xx

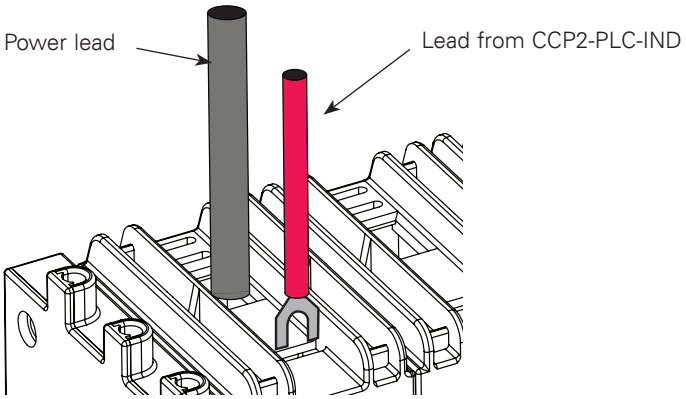

Leads from CCP2-PLC-IND are connected to the fork terminals as shown.

Note: When monitoring a 1- or 2-pole switch, remove unused leads.

Dimensions — in

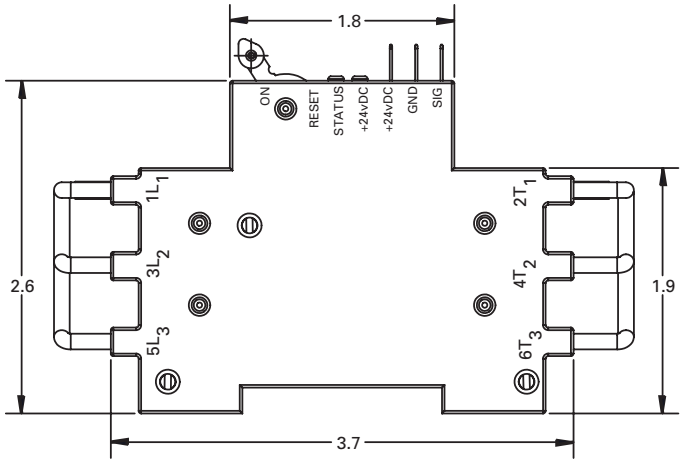

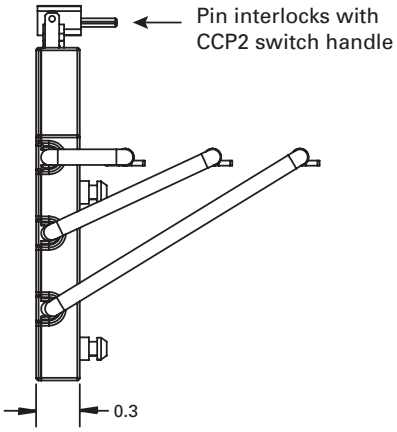

Class CC and UL Supplemental (IEC 10x38) clockwise rotary switches

For a complete assembly, select from the following required and optional components, and accessories.

		Catalog no.		
Required		**Switches**	**Amps**	**Poles**
		Right front rotary		
		CCP2R-2-30CC	30	2
		CCP2R-3-30CC		3
		CCP2R-2-30M		2
		CCP2R-3-30M		3
		Left front rotary		
		CCP2RL-2-30CC	30	2
		CCP2RL-3-30CC		3
		CCP2RL-2-30M		2
		CCP2RL-3-30M		3
		Right side rotary		
		CCP2S-2-30CC	30	2
		CCP2S-3-30CC		3
		CCP2S-2-30M		2
		CCP2S-3-30M		3
		And		
		Rotary handles	**Description**	**NEMA rating**
		CCP2-H4X-B1	Selector handle — black/grey	4X
		CCP2-H4X-R1	Selector handle — red/yellow	
		CCP2-H4X-B2	Pistol handle — black/grey	
		CCP2-H4X-R2	Pistol handle — red/yellow	
		And		
		Shafts (8 mm)	**Length**	
		CCP2-SH1-290	290 mm	
		CCP2-SH1-490	490 mm	
		NFPA 79 compliant handle	**Color**	
		CCP2-NFPA-1	Red	
And				
Optional		**Lug kits**	**Description**	
		CCP2-MW1-3	3-port multi-wire, 75°C Cu/Al, 6-14, includes terminal shrouds, pack of 3	

And			
Accessories		**Terminal shrouds**	**Description**
		CCP2-TS1-3	Pack of 3
		Auxiliary contacts	**Description — cannot be used on right front or right side operated switches**
		CCP2-AUX	NO + NC, 5 A / 240 V
		PLC fuse monitor	**Description — Cannot be used on left front operated switches**
		CCP2-PLC-IND	Signal output 24 Vdc / 10 mA

Class CC and UL Supplemental (IEC 10x38) Switches

For a complete assembly, select from the following required and optional components, and accessories.

		Catalog no.		
		Switches	**Amps**	**Poles**
		Switch		
Required		CCP2-1-30CC	30	1
		CCP2-2-30CC		2
		CCP2-3-30CC		3
		CCP2-1-30M		1
		CCP2-2-30M		2
		CCP2-3-30M		3
And				
Optional		**Lug kits**	**Description**	
		CCP2-MW1-3	3-port multi-wire, 75°C Cu/Al, 6-14, includes terminal shrouds, pack of 3	
And				
Accessories		**Terminal shrouds**	**Description**	
		CCP2-TS1-3	Pack of 3	
		Auxiliary contacts	**Description**	
		CCP2-AUX	NO + NC, 5 A / 240 V	
		PLC fuse monitor	**Description**	
		CCP2-PLC-IND	Signal output 24 Vdc / 10 mA	

Class CC and UL Supplemental (IEC 10x38) counterclockwise switches

For a complete assembly, select from the following required and optional components, and accessories.

Required		**Catalog no.**		
		Switches	**Amps**	**Poles**
		Left side rotary		
		CCP2SL-2-30CC	30	2
		CCP2SL-3-30CC		3
		CCP2SL-2-30M		2
		CCP2SL-2-30M		2
		And		
		Rotary handles	**Description**	**NEMA rating**
		CCP2-H4X-B1L	Selector handle — black/grey	4X
		CCP2-H4X-R1L	Selector handle — red/yellow	
		CCP2-H4X-B2L	Pistol handle — black/grey	
		CCP2-H4X-R2L	Pistol handle — red/yellow	
		And		
		Shafts (8 mm)	**Length**	
		CCP2-SH1-290	290 mm	
		CCP2-SH1-490	490 mm	
And				
Optional		**Lug kits**	**Description**	
		CCP2-MW1-3	3-port multi-wire, 75°C Cu/Al, 6-14, includes terminal shrouds, pack of 3	
And				
Accessories		**Terminal shrouds**	**Description**	
		CCP2-TS1-3	Pack of 3	
		Auxiliary contacts	**Description —mounts on right side**	
		CCP2-AUX	NO + NC, 5 A / 240 V	

CCPLP UL 98 Listed low profile Compact Circuit Protector

The revolutionary Bussmann series low profile Compact Circuit Protector (CCPLP) is a UL 98/508 Listed fused disconnect switch. This front panel mount switch is available in 1-, 2- and 3-pole versions, and has the smallest footprint of any fused disconnect switch. It features an SCCR up to 200 kA to help improve equipment SCCR.

Four fuse types

The CCPLP is available for UL Class CC and G, UL supplemental (13/32″ x 1-1/2″) and IEC 10x38 mm fuses.

Class CC and G versions are easily selectively coordinated with the upstream Bussmann series CUBEFuse™ using published fuse ampacity ratio tables.

Design/application flexibility

The CCPLP is easily integrated into many panel designs and provides a high SCCR alternative to low profile circuit breakers on the market.

Ratings

- Volts
  - 600 Vac (Class CC up to 30 A, Class G 20 A)
  - 550 Vac (10x38mm IEC Class aM 0.16-16 A)
  - 500 Vac (10x38mm IEC Class gG 0.5-25 A)
  - 400 Vac (10x38mm IEC Class aM 20-32 A, gG 32 A)
  - 240 Vac (13/32″ x 1-1/2″ UL supplemental 30 A)
- Amps
  - Up to 30 A (UL)
  - Up to 32 A (IEC)
- SCCR
  - 200 kA (Class CC)
  - 120 kA (10x38mm IEC Class gG and aM)
  - 100 kA (Class G)
  - 10 kA (13/32″ x 1-1/2″ UL supplemental)
- Frequency 50/60 Hz
- Impulse voltage 8 kV

Terminals and conductors 75°C/90°C Cu

- Screw terminal, 10-32 phil-slot screw with external tooth lock washer (use with properly rated/UL Listed ring or fork terminal)
- Pressure plate terminal, 10-32 phil-slot screw (single 22-6 AWG solid or stranded)

Ambient storage and operating temperature

- -20 to 90°C, 85% relative humidity, non-condensing

Poles

1-, 2- and 3-pole factory configured*

* 2- and 3-pole versions supplied as ganged switches with phase barriers.

Agency information

- Class G fuse versions
  - UL 98 Listed, Guide WHTY, File E302370
  - IEC 60947-3 AC-23A
- Class CC fuse versions
  - UL 98 Listed, Guide WHTY, File E302370
  - cULus to Canadian Standard 22.2 No. 4-04, Guide WHTY7, File E302370
  - IEC 60947-3 AC-23A
- UL supplemental and IEC 10x38mm fuse versions
  - UL 508 Listed, Guide NRNT, File E320230
  - cULus Listed to Canadian Standard 22.2 No. 14-05, Guide NRNT7, File E320230
  - IEC 60947-3 AC-23A
- RoHS compliant
- CE

Safety

- Finger-safe IP20 from panel front

Mounting

- Front panel mounting with customer supplied M3 screws

Open fuse indication*

- Local open fuse indication provided for each pole by an orange neon lamp (minimum 90 V)

* Open fuse indication requires an energized, closed circuit with an open fuse in the CCPLP and the switch in the ON position.

Lockout/tagout provision

- Brady pin-out device, part number 90844

Circuit labeling provision

- Accepts up to two universal marker labels, catalog number TM26CB

Carton quantity

- 12 poles (1-pole: 12 units, 2-pole: 6 units, 3-pole: 4 units)

Minimum enclosure size

- 6″ x 6″ x 4″ per UL 98 Listing

Data sheet no.10372

Available CCPLP versions

Catalog no.					SCCR	Horsepower (Vac)			
Screw terminal	Pressure plate terminal	Poles	Volts AC	Amps	(kA)	120	240	480	600
UL Class G fuse									
CCPLP-1-20G-S	CCPLP-1-20G-P	1				—	—	—	—
CCPLP-2-20G-S	CCPLP-2-20G-P	2	600	20	100	—	—	—	—
CCPLP-3-20G-S	CCPLP-3-20G-P	3				—	—	—	—
UL Class CC fuses									
CCPLP-1-30CC-S	CCPLP-1-30CC-P	1				0.5	—	—	—
CCPLP-2-30CC-S	CCPLP-2-30CC-P	2	600	30	200	—	2	—	—
CCPLP-3-30CC-S	CCPLP-3-30CC-P	3				—	3	4	7. 5
UL 13/32"x1-1/2" midget fuses									
CCPLP-1-30M-S	CCPLP-1-30M-P	1				—	—	—	—
CCPLP-2-30M-S	CCPLP-2-30M-P	2	240	30	10	—	—	—	—
CCPLP-3-30M-S	CCPLP-3-30M-P	3				—	—	—	—
IEC 10x38 gG and aM fuses									
CCPLP-1-30M-S	CCPLP-1-30M-P	1	gG fuses: up to 25 A @ 500 V 32 A @ 400 V		120	—	—	—	—
CCPLP-2-30M-S	CCPLP-2-30M-P	2	aM fuses: up to 16 A @ 550 A 20-23 A @ 400V		120	—	—	—	—
CCPLP-3-30M-S	CCPLP-3-30M-P	3			120	—	—	—	—

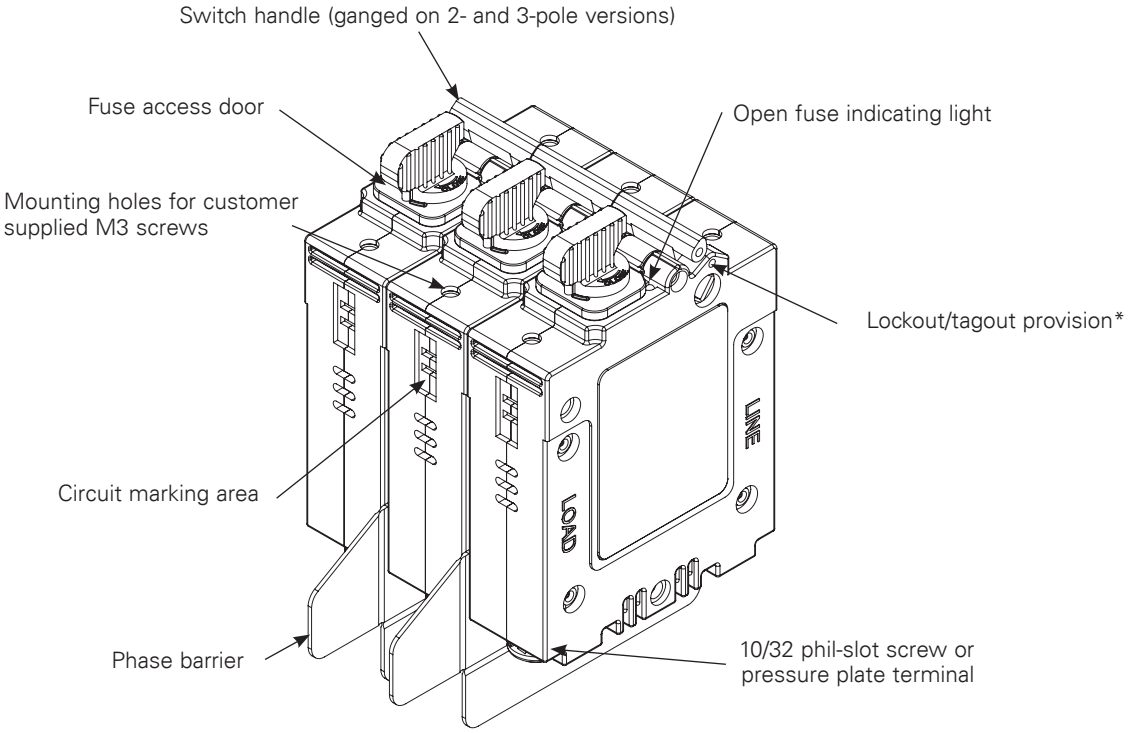

* Use Brady pin-out device, P/N 90844

Available Bussmann series fuses

Fuse class	Catalog symbol
CC	FNQ-R, KTK-R, LP-CC
G	SC
M	BAF, FNM, FNQ, KLM, KTK
gG	C10G
aM	C10M

Data sheet no.10372

UL 98 fused disconnect switches up to 800 A

Bussmann series UL 98 and UL 489 fused disconnect switches "break" and "make" power circuits ON and OFF load.

The switches employ double break contacts per pole that help ensure complete isolation of the fuse when the switch is in the "OFF" position.

Agency information

- UL 98, Guide WHTY, File E155130
- UL 489, Guide WJAZ, File E359801
- CSA 22.2 No. 4, File 257020
- Conforms with IEC 60947-3
- NFPA 79

Features

- Make and break power under load
- Double break by pole
- 30-60 A DIN-Rail or panel mount, 100-800 A panel mount only
- Up to 200 kA short-circuit current rating
- Finger-safe covers
- Compact footprints available
- Defeatable handles automatically re-latch when the panel door is closed
- Most disconnect switches are front, right side, flange or direct handle operable
- NFPA 79 compliant handle kits

Online resources available at Eaton.com/bussmannseries

- CAD drawings
- Instruction sheets
- UL information

Available Bussmann series fuses

Fuse class	Catalog symbol/type
CC	LP-CC time-delay, current limiting
	FNQ-R time-delay
	KTK-R fast-acting
J	LPJ time-delay, current limiting
	JKS fast-acting fuses
	DFJ high speed drive fuse
L	KRP-C time-delay, current limiting
	KTU fast-acting
	KLU time-delay
	KRP-CL (225-600 A)

UL 98 fused disconnect switches — 30 to 800 A

RDF30CC-3

RDF30J-3 / RDF60J-3-COMP

RDF60J-3

RDF200J-3

RDF600J-3

Poles		Catalog no.									
2-pole		**—**	**—**	**RDF30J-2**	**RDF60J-2-COMP**	**RDF60J-2**	**RDF100J-2**	**RDF200J-2**	**RDF400J-2**	**RDF600J-2**	**RDF800L-2**
3-pole		**RDF30CC-3**	**RDF30J-3-COMP**	**RDF30J-3**	**RDF60J-3-COMP**	**RDF60J-3**	**RDF100J-3**	**RDF200J-3**	**RDF400J-3**	**RDF600J-3**	**RDF800L-3**
3-pole + neutral		**RDF30CC-3N**	**RDF30J-3N-COMP**	**—**	**—**	**—**	**—**	**—**	**—**	**—**	**—**
4-pole		**—**	**—**	**RDF30J-4**	**RDF60J-4-COMP**	**RDF60J-4**	**RDF100J-4**	**RDF200J-4**	**RDF400J-4**	**RDF600J-4**	**RDF800L-4**
UL standard		UL 489	UL 489	UL 98	UL 98	UL 98	UL 98	UL 98	UL 98	UL 98	UL 98
Fuse class		CC	J	J	J	J	J	J	J	J	L
Max fuse/ampacity		30	30	30	60	60	100	200	400	600	800
Switch type		Compact	Compact	Standard	Compact	Standard	Standard	Standard	Standard	Standard	Standard
Handle operation		Front	Front	Front/Side	Front/Side	Front/Side	Front/Side , Flange	Front/Side , Flange	Front/Side , Flange	Front , Flange	Front , Flange
UL electrical ratings											
Max AC volts		600 Vac	600 Vac	600 Vac	600 Vac	600 Vac	600 Vac	600 Vac	600 Vac	600 Vac	600 Vac
Max DC volts*		—	—	250 Vdc	250 Vdc	250 Vdc	250 Vdc	—	250 Vdc	600 Vdc	600 Vdc
Std. AC Hp ratings	1-phase, 240	—	—	3	10	10	10	10	10	—	—
	3-phase, 240	3	3	3	7.5	7.5	15	25	50	75	75
	3-phase, 480	5.0	5.0	5.0	15	15	25	50	100	150	200
	3-phase, 600	7.5	7.5	7.5	15	15	30	60	125	200	250
Max. AC Hp ratings	3-phase, 240	7.5	7.5	7.5	15	15	30	60	125	200	200
	3-phase, 480	15	15	15	30	30	60	125	250	400	500
	3-phase, 600	20	20	20	50	50	75	150	350	500	500
DC Hp ratings	125 Vdc	—	—	3	5	5	7.5	—	20	—	—
	250 Vdc	—	—	5	10	10	20	—	50	—	—
Electrical characteristics											
SCCR		100 kA	100 kA	200 kA	100 kA	200 kA	200 kA	200 kA	200 kA	200 kA	200 kA
Terminal lugs/kits		Integral	Integral	Integral	Integral	Integral	Integral	•	•	•	•
Mounting torque - lb-in (N•m)		—	—	—	—	—	—	160 (18)	310 (35)	310 (35)	310 (35)
Wire type		75°C Cu	75°C Cu	75°C Cu	75°C Cu	75°C Cu	75°C Cu	75°C Cu/ Al	75°C Cu/ Al	75°C Cu/ Al	75°C Cu/ Al
Wire range, torque - lb-in (N•m)	Solid	14-10, 27 (3.1)	14-10, 27 (3.1)	14-10, 31 (3.5)	14-10, 31 (3.5)	12-10, 35.4 (4)	12-10, 35.4 (4)	—	—	—	—
	Stranded	14-10 27 (3.1)	14-10 27 (3.1)	14-6 , 31 (3.5)	14-6, 31 (3.5)	12-1, 35.4 (4)	12-1, 35.4 (4)	6-300 kcmil, 275 (31)	4-600 kcmil, 550 (62), Dual 1/0-250 kcmil 550 (62)	(2) 2-600 kcmil, 375 (42.4)	(2) 2-600 kcmil, 375 (42.4)
Mechanical characteristics											
Endurances/cycles		10,000	10,000	10,000	10,000	10,000	10,000	8000	6000	5000	5000
Physical characteristics											
Dimensions		See drawings on product pages									
Weight - lbs (kg)	2-pole	—	—	3.0 (1.3)	3.1 (1.4)	4.1 (1.8)	4.1 (1.8)	5.7 (2.6)	11.4 (5.2)	31.7 (14.4)	31.7 (14.4)
	3-pole	1.3 (0.6)	1.4 (0.6)	3.8 (1.7)	4.1 (1.8)	5.3 (2.4)	5.3 (2.4)	7.8 (3.5)	16.6 (7.6)	44.2 (20.1)	44.2 (20.1)
	3-pole + neutral	1.4 (0.6)	1.5 (0.7)	—	—	—	—	—	—	—	—
	4-pole	—	—	4.7 (2.1)	4.8 (2.2)	6.49 (2.9)	6.49 (2.9)	10.8 (4.9)	21.8 (9.9)	56.8 (25.8)	56.8 (25.8)
Environmental											
Operating temp. range		-20-70°C	-20-70°C	-20-70°C	-20-70°C	-20-70°C	-20-70°C	-20-70°C	-20-70°C	-20-70°C	-20-70°C
Flammability rating		UL 94-V0	UL 94-V0	UL 94-V0	UL 94-V0	UL 94-V0	UL 94-V0	UL 94-V0	UL 94-V0	UL 94-V0	UL 94-V0
Accessories											
Lug Kit		Integral	Integral	Integral	Integral	Integral	Integral	•	•	•	•
Handles	Direct	•	•	•	•	•	•	•	•	•	•
	Front selector	•	•	—	—	—	—	—	—	—	—
	Front pistol	•	•	•	•	•	•	•	•	•	•
	Side pistol	—	—	•	•	•	•	•	•	—	—
Flange	Cable	—	—	•	•	•	•	•	—	—	—
	Shaft	—	—	•	•	•	•	•	—	—	—
NFPA through door handle		•	•	•	•	•	•	•	•	•	•
Shafts c/s - mm		5x5	5x5	10x10	10x10	10x10	10x10	10x10	10x10	12X12	12X12
Terminal shrouds		Not Required	Not Required	Not Required	Not Required	Not Required	Not Required	•	•	•	•
Auxiliary contacts	(1) NO	•	•	•	•	•	•	•	•	•	•
	(1) NC	•	•	•	•	•	•	•	•	•	•
AC ratings	Volts	600	600	600	600	600	600	600	600	600	600
	Amps	10	10	10	10	10	10	10	10	10	10

• Available, see product page for details and catalog numbers.
— Not available.
* General purpose only, not photovoltaic rated.

UL 98 fused rotary disconnect switches — 30 A

Standard 30 amp Class CC and compact 30 amp Class J

For a complete assembly, select:

Select for standard applications

Switch

Switch

Amps	Fuse class	Poles	SCCR (kA)	Max Hp rating, 3-phase 220/240	440/480	600	Conductor AWG size /type	Catalog no.
30	CC	3	100	7.5	15	20	14-10 Sol/Str 75°C Cu	RDF30CC-3
30		3 + Ntrl.*	100	7.5	15	20		RDF30CC-3N
30	J	3	100	7.5	15	20		RDF30J-3-COMP
30		3 + Ntrl.*	100	7.5	15	20		RDF30J-3N-COMP

* Neutral is switched.

Plus

Handle

Direct mount handle - mounts directly to switch, no shaft required

For switch cat. no.	Color	Test function	Padlockable	Catalog no.
RDF30CC-_	Black	Y	Y	DIR-05
RDF30J-_-COMP				DIR-06

OR

+

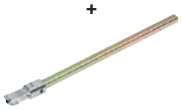

External front operated selector handle - shaft required

NEMA type	Color	Test function	Padlockable	Defeatable	Catalog no.
1, 3R, 4, 4X, 12	Black	N	Y	Y	H4X-04B
1, 3R, 4, 4X, 12	Red/yellow				H4X-04R

Shafts for selector handles

Length - in (mm)	Mounting depth (X) - in (mm)	Catalog no.
7.9 (200)	4.02~9.65 (102~245)	SH1-200
12.6 (320)	4.02~14.37 (102~365)	SH1-320
15.7 (400)	4.02~17.52 (102~445)	SH1-400

OR

or

+

External front operated pistol handles - shaft required

NEMA type	Color	Test function	Padlockable	Defeatable	Catalog no.
1, 3R, 12	Black	N	Y	Y	H12-05B
1, 3R, 12	Red/yellow				H12-05R
1, 3R, 4, 4X, 12	Black				H4X-05B
1, 3R, 4, 4X, 12	Red/yellow				H4X-05R
1, 3R, 4, 4X, 12	Black	Y			H4X-05TB
1, 3R, 4, 4X, 12	Red/yellow				H4X-05TR

Metallic hasp (heavy duty) external front operated pistol handles - shaft required

NEMA type	Color	Test function	Padlockable	Defeatable	Catalog no.
1, 3R, 4, 4X, 12	Black	N	Y	Y	H4X-05BHD
1, 3R, 4, 4X, 12	Red/yellow				H4X-05RHD

Shafts for pistol handles

Length - in (mm)	Mounting depth (X) - in (mm)	Catalog no.
7.9 (200)	4.02~9.65 (102~245)	SH2-200
12.6 (320)	4.02~14.37 (102~365)	SH2-320
15.7 (400)	4.02~17.52 (102~445)	SH2-400

OR

NFPA through the door handle kit - to be used with front pistol handle

Color	Test function	Padlockable	Defeatable	Catalog no.
Red	N	Y	N	H79-1

AND...

Accessories

Auxiliary contacts

1 2

Auxiliary contacts

Contact type	No. of contacts	Continuous amp rating	Voltage (Vac)	Maximum number of auxiliary contacts per disconnect switch catalog number	Catalog no.
NO	1	10	600	RDF30CC-_: 4 / 8 with BAC-HOLDER2 BAC05 (1) RDF30J-_-COMP: 2 /6 with BAC-HOLDER2	BAC05 (1)
NC					BAC06 (1)
Auxiliary contact holder				Accepts 4 Auxiliary contacts: BAC05 or BAC06	BAC-HOLDER2 (2)

Dimensions — in (mm)

RDF30CC-_

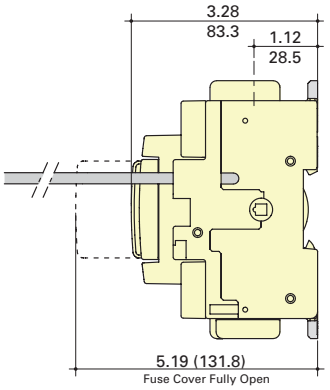

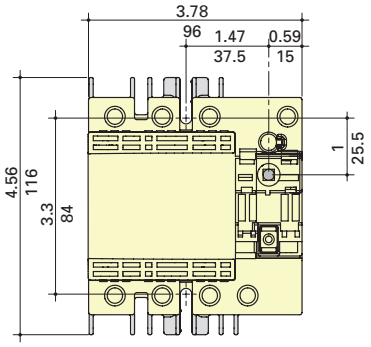

RDF30J-_-COMP

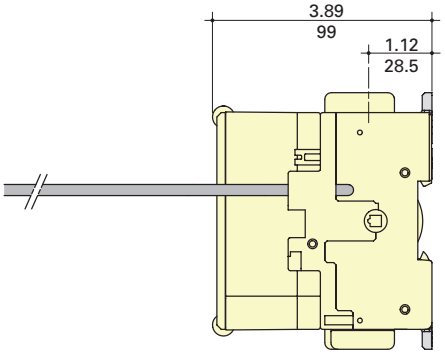

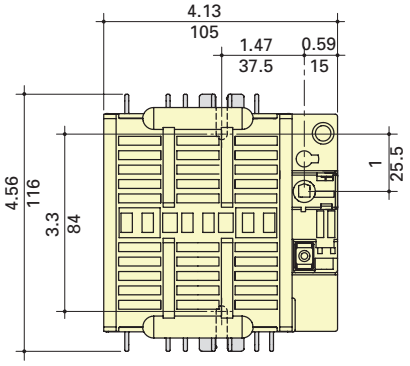

External front selector handle

Selector handle type

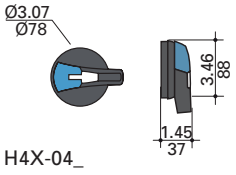

Direction of front operation

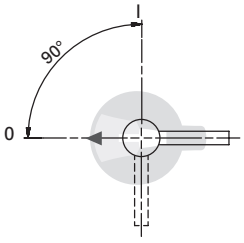

Door drilling layout

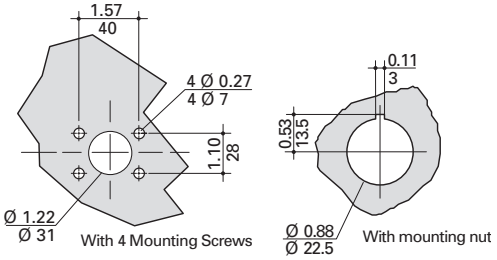

External front pistol handles

Pistol handle type

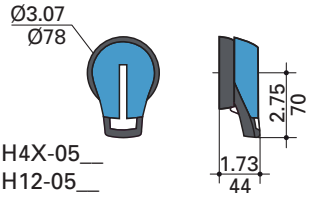

Direction of front operation

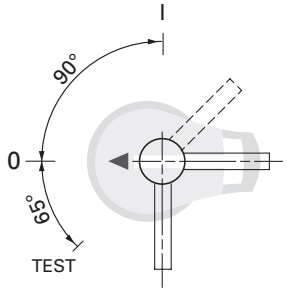

Door drilling layout

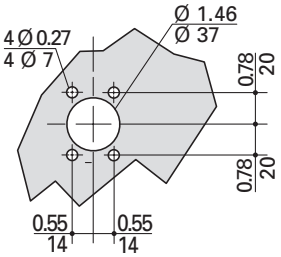

Standard 30 amp Class J

For a complete assembly, select:

Select for standard applications

Switch

Amps	Fuse class	Poles	SCCR (kA)	Max horsepower rating 1-phase 220/240	1-phase 220/240	3-phase 440/480	3-phase 600	DC* 125	DC* 250	Conductors AWG size / type	Catalog no.
30	J	2	200	3	-	-	-	3	5	14-10 Sol/14-6 Str 75°C Cu	RDF30J-2
		3		-	7.5	15	20	3	5		RDF30J-3
		4		-	7.5	15	20	3	5		RDF30J-4

* DC ratings use two poles in series.

PLUS

Handle

Direct mount handle - mounts directly to switch, no shaft required

For switch cat. no.	Color	Test function	Padlockable	Catalog no.
All switches	Black	Y	Y - On switch	DIR-07

OR

External front operated pistol handles - shaft required

NEMA type	Color	Test function	Padlockable	Defeatable	Catalog no.
1, 3R, 12	Black	N	Y	Y	H12-05B
	Red/yellow				H12-05R
1, 3R, 4, 4X, 12	Black				H4X-05B
	Red/yellow				H4X-05R
	Black	Y			H4X-05TB
	Red/yellow				H4X-05TR

Or

Metallic hasp (heavy duty) external front operated pistol handles - shaft required

NEMA type	Color	Color	Test function	Padlockable	Defeatable	Catalog no.
1, 3R, 4, 4X, 12		Black	N	Y	Y	H4X-05BHD
		Red/yellow				H4X-05RHD

External right side operated pistol handles - shaft required

NEMA type	Color	Test function	Padlockable	Defeatable	Catalog no.
1, 3R, 4, 4X, 12	Black	N	Y	N/A	H4X-05SB
	Red/yellow				H4X-05SR

\+

Shafts for pistol handles

Length — in (mm)	Mounting depth (X) — in (mm)	Catalog no.
7.9 (200)	5.30~9.06 (135~230)	SH5-200
12.6 (320)	5.30~13.78 (135~350)	SH5-320
15.7 (400)	5.30~16.93 (135~430)	SH5-400

OR

Flange handle (1) - requires shaft operated mechanism or cable operated mechanism + cable

NEMA type	Flange style	Test function	Padlockable	Defeatable	Catalog no.
1, 3R, 4, 12	Standard	N	Y	Y	FLH1
1, 3R, 4, 4X, 12	Chrome plated				FLH2

Shaft operated flange mechanism (2) - includes shaft

For enclosure depth - in (mm)	Catalog no.
6~24 (152~613)	FLRM

Cable operated flange mechanism and cable - must select mechanism (3) and cable (4)

Item / length — in (mm)	Catalog no.
Cable mechanism	FLCM
36 (900) cable	FLC36
60 (1500) cable	FLC60
120 (3000) cable	FLC120

OR

NFPA through the door handle kit - to be used with front pistol handle

Color	Test function	Padlockable	Defeatable	Catalog no.
Red	N	Y	N	H79-2

AND...

Accessories

Aux. contacts

Auxiliary contacts

Contact type	No. of contacts	Continuous amp rating	Voltage (Vac)	Max. aux contacts per switch	Catalog no.
NO	1	10	600	4	BAC05
NC					BAC06

Dimensions — in (mm)

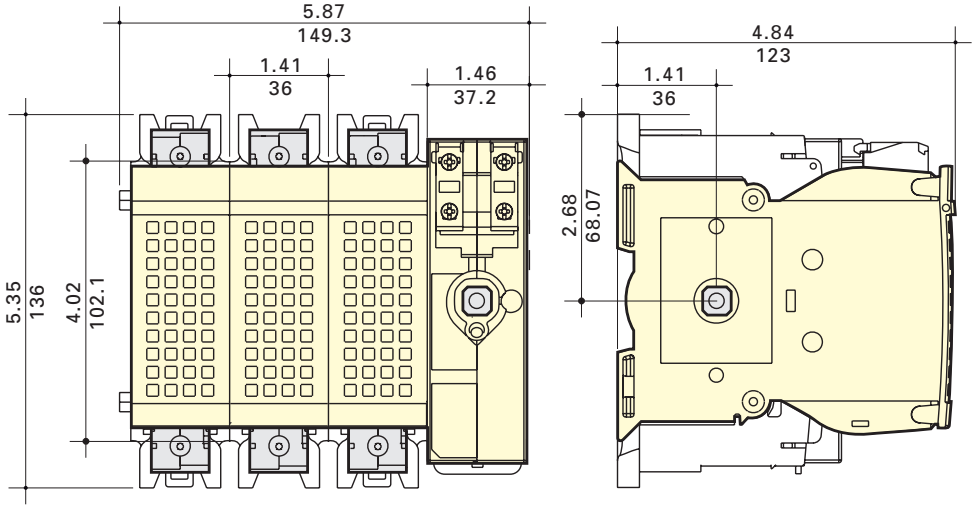

Direct mount handle

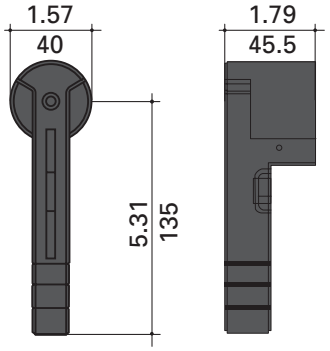

DIR-07

Flange handle

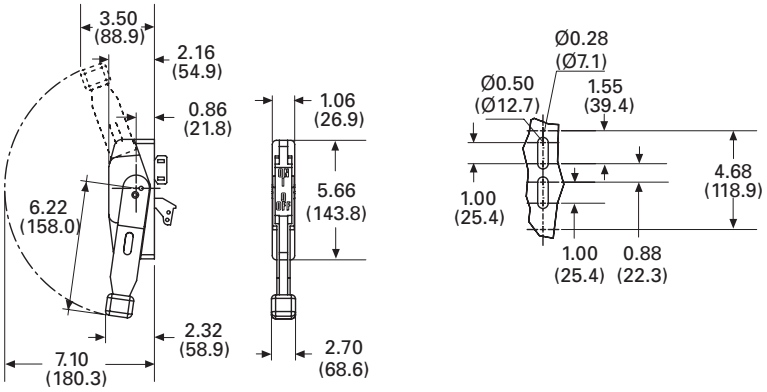

FLH_

External front and right side pistol handle

Handle type | Direction of front operation | Direction of right side operation | Door drilling layout

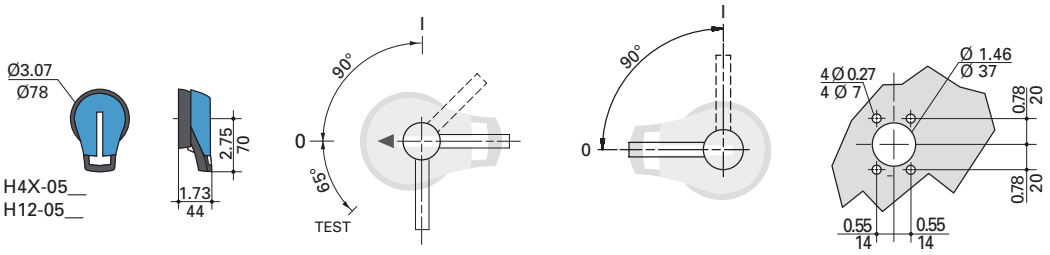

Compact 60 amp Class J

For a complete assembly, select:

Select for standard applications

Switch

Switch

Amps	Fuse class	Poles	SCCR (kA)	Max horsepower rating: 1-phase 220/240	3-phase 220/240	3-phase 440/480	3-phase 600	DC* 125	DC* 250	Conductor AWG size / type	Catalog no.
60	J	2	100	10	-	-	-	5	10	14-10 Sol/14-6 Str 75°C Cu	RDF60J-2-COMP
		3		-	15	30	50	5	10		RDF60J-3-COMP
		4		-	15	30	50	5	10		RDF60J-4-COMP

* DC ratings use two poles in series.

PLUS

Handle

Direct mount handle - mounts directly to switch, no shaft required

For switch cat. no.	Color	Test function	Padlockable	Catalog no.
All switches	Black	Y	Y - on switch	DIR-07

OR

External front operated pistol handles - shaft required

NEMA type	Color	Test function	Padlockable	Defeatable	Catalog no.
1, 3R, 12	Black	N	Y	Y	H12-05B
1, 3R, 12	Red/yellow				H12-05R
1, 3R, 4, 4X, 12	Black				H4X-05B
1, 3R, 4, 4X, 12	Red/yellow				H4X-05R
1, 3R, 4, 4X, 12	Black	Y			H4X-05TB
1, 3R, 4, 4X, 12	Red/yellow				H4X-05TR

Or

Metallic hasp (heavy duty) external front operated pistol handles - shaft required

NEMA type	Color	Test function	Padlockable	Defeatable	Catalog no.
1, 3R, 4, 4X, 12	Black	N	Y	Y	H4X-05BHD
1, 3R, 4, 4X, 12	Red/yellow				H4X-05RHD

External right side operated pistol handles - shaft required

NEMA type	Color	Test function	Padlockable	Defeatable	Catalog no.
1, 3R, 4, 4X, 12	Black	N	Y	N/A	H4X-05SB
1, 3R, 4, 4X, 12	Red/yellow				H4X-05SR

+

Shafts for pistol handles

Length — in (mm)	Mounting depth (X) - in (mm)	Catalog no.
7.9 (200)	5.30~9.06 (135~230)	SH5-200
12.6 (320)	5.30~13.78 (135~350)	SH5-320
15.7 (400)	5.30~16.93 (135~430)	SH5-400

OR

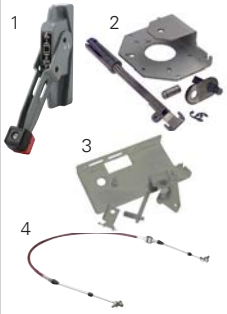

Flange handle (1) - requires shaft operated mechanism or cable operated mechanism + cable

NEMA type	Flange style	Test function	Padlockable	Defeatable	Catalog no.
1, 3R, 4, 12	Standard	N	Y	Y	FLH1
1, 3R, 4, 4X, 12	Chrome plated				FLH2

Shaft operated flange mechanism (2) - includes shaft

For enclosure depth - in (mm)	Catalog no.
6~24 (152~613)	FLRM

Cable operated flange mechanism and cable - must select mechanism (3) and cable (4)

Item / length — in (mm)	Catalog no.
Cable mechanism	FLCM
36 (900) cable	FLC36
60 (1500) cable	FLC60
120 (3000) cable	FLC120

OR

NFPA through the door handle kit - to be used with selector handle or front pistol handle

Color	Test function	Padlockable	Defeatable	Catalog no.
Red	N	Y	N	H79-2

AND...

Accessories

Aux. contacts

Auxiliary contacts

Contact type	No. of contacts	Continuous amp rating	Voltage (Vac)	Max. aux contacts per switch	Catalog no.
NO	1	10	600	4	BAC05
NC					BAC06

Dimensions — in (mm)

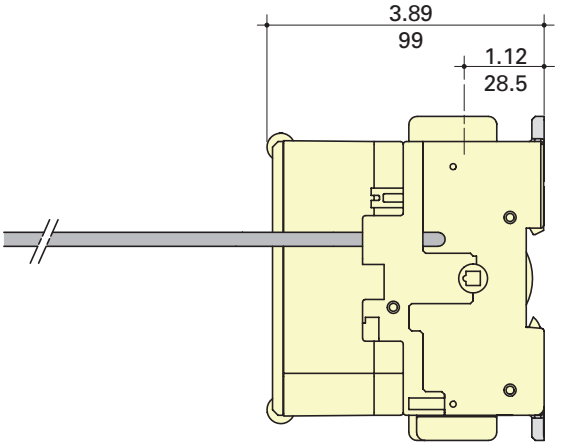

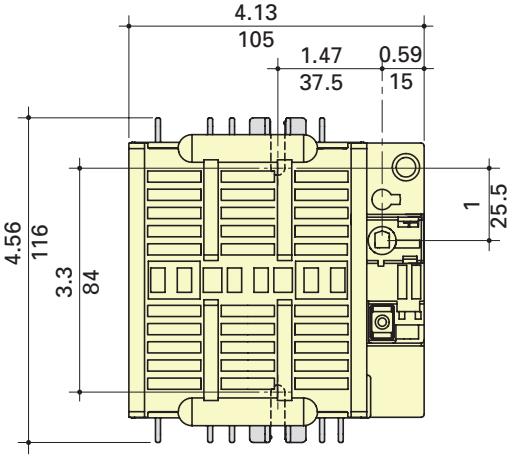

Direct mount handle

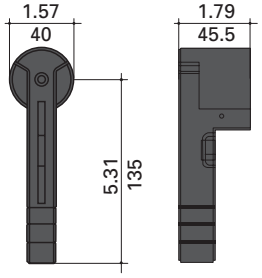

DIR-07

Flange handle

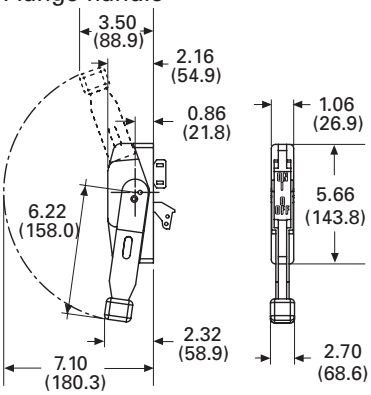

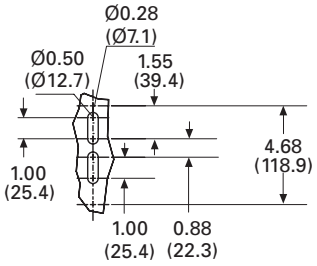

FLH_

External front and right side pistol handle

Handle type	Direction of front operation	Direction of right side operation	Door drilling layout

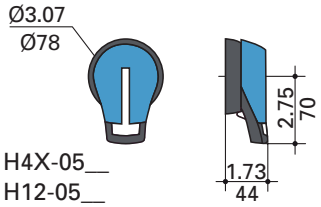

H4X-05__
H12-05__

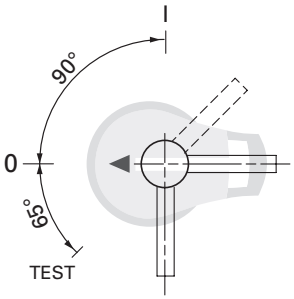

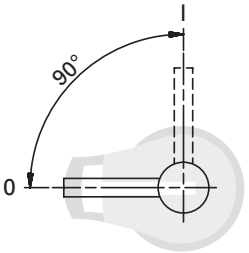

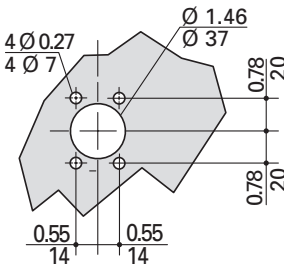

Standard 60 amp Class J

For a complete assembly, select:

Switch

Amps	Fuse class	Poles	SCCR (kA)	Max horsepower rating 1-phase 220/240	3-phase 220/240	3-phase 440/480	3-phase 600	DC* 125	DC* 250	Conductor AWG size/type	Catalog no.
60	J	2	200	10	-	-	-	5	10	12-10 Sol/12-1 Str 75°C Cu	RDF60J-2
		3	200	-	15	30	50	5	10		RDF60J-3
		4	200	-	15	30	50	5	10		RDF60J-4

* DC ratings use two poles in series.

PLUS

Direct mount handle - mounts directly to switch, no shaft required

For switch cat. no.	Color	Test function	Padlockable	Catalog no.
All switches	Black	Y	Y	DIR-07

OR

External front operated pistol handles - shaft required

NEMA type	Color	Test function	Padlockable	Defeatable	Catalog no.
1, 3R, 12	Black	N	Y	Y	H12-03B
1, 3R, 12	Red/yellow				H12-03R
1, 3R, 4, 4X, 12	Black				H4X-06B
1, 3R, 4, 4X, 12	Red/yellow				H4X-06R
1, 3R, 4, 4X, 12	Black	Y			H4X-06TB
1, 3R, 4, 4X, 12	Red/yellow				H4X-06TR

Or

Metallic hasp (heavy duty) external front operated pistol handles - shaft required

NEMA type	Color	Test function	Padlockable	Defeatable	Catalog no.
1, 3R, 4, 4X, 12	Black	N	Y	Y	H4X-06BHD
1, 3R, 4, 4X, 12	Red/yellow				H4X-06RHD

External right side operated pistol handles - shaft required

NEMA type	Color	Test function	Padlockable	Defeatable	Catalog no.
1, 3R, 4, 4X, 12	Black	N	Y	N/A	H4X-06SB
1, 3R, 4, 4X, 12	Red/yellow				H4X-06SR

+

Shafts for pistol handles

Length — in (mm)	Mounting depth (X) — in (mm)	Catalog no.
7.9 (200)	5.30~9.06 (135~230)	SH5-200
12.6 (320)	5.30~13.78 (135~350)	SH5-320
15.7 (400)	5.30~16.93 (135~430)	SH5-400

OR

Flange handle (1) - requires shaft operated mechanism or cable operated mechanism + cable

NEMA type	Flange style	Test Function	Padlockable	Defeatable	Catalog no.
1, 3R, 4, 12	Standard	N	Y	Y	FLH1
1, 3R, 4, 4X, 12	Chrome plated				FLH2

Shaft operated flange mechanism (2) - includes shaft

For enclosure depth — in (mm)	Catalog no.
6~24 (152~613)	FLRM

Cable operated flange mechanism and cable - must select mechanism (3) and cable (4)

Item / length — in (mm)	Catalog no.
Cable mechanism	FLCM
36 (900) cable	FLC36
60 (1500) cable	FLC60
120 (3000) cable	FLC120

OR

NFPA through the door handle kit - to be used with front pistol handle

Color	Test function	Padlockable	Defeatable	Catalog no.
Red	N	Y	N	H79-2

AND...

Auxiliary contacts

Contact type	No. of contacts	Continuous amp rating	Voltage (Vac)	Max number of aux contacts per switch	Catalog no.
NO	1	10	600	4	BAC05
NC					BAC06

Dimensions — in (mm)

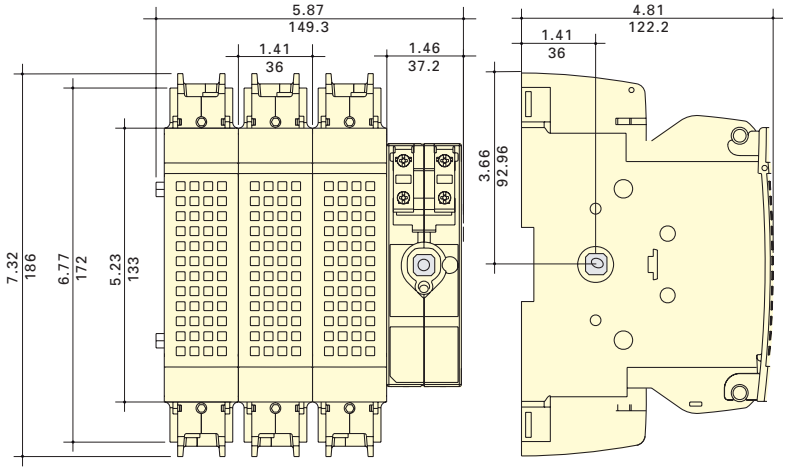

Direct mount handle

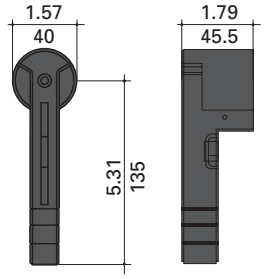

DIR-07

Flange handle

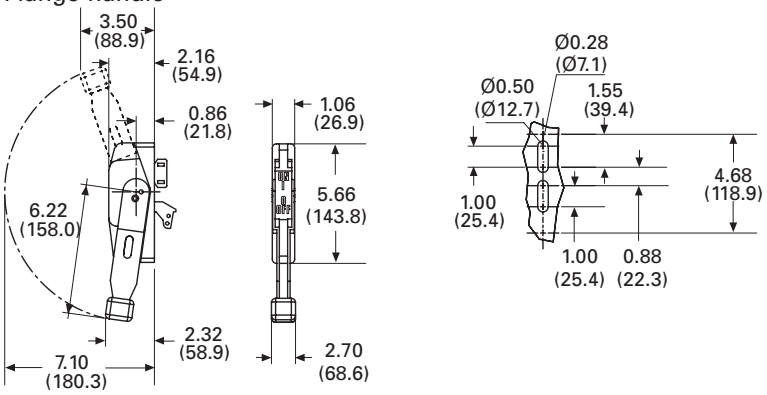

FLH_

External front and right side pistol handle

Handle type

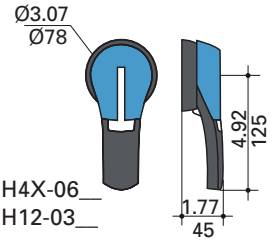

H4X-06__
H12-03__

Direction of front operation

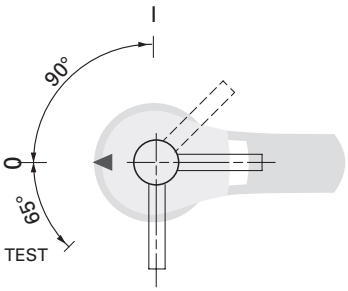

Direction of right side operation

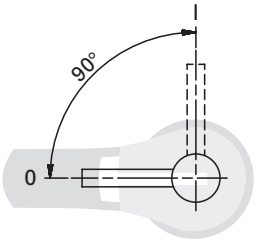

Door drilling layout

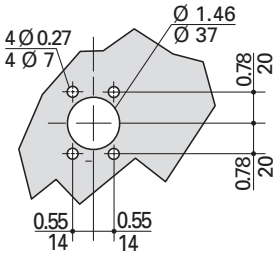

Standard 100 amp Class J

For a complete assembly, select:

Select for standard applications

Switch

Switch

Amps	Fuse class	Poles	SCCR (kA)	Max horsepower rating: 1-phase 220/240	3-phase 220/240	3-phase 440/480	3-phase 600	DC* 125	DC* 250	Conductor AWG size/type	Catalog no.
100	J	2	200	10	-	-	-	7.5	20	12-10 Sol/12-1 Str 75°C Cu	RDF100J-2
		3		-	30	60	75	7.5	20		RDF100J-3
		4		-	30	60	75	7.5	20		RDF100J-4

* DC ratings use two poles in series.

PLUS

Handles

Direct mount handle - mounts directly to switch, no shaft required

For switch cat. no.	Color	Test function	Padlockable	Catalog no.
All switches	Black	Y	Y	DIR-07

OR

External front operated pistol handles - shaft required

NEMA type	Color	Test function	Padlockable	Defeatable	Catalog no.
1, 3R, 12	Black	N	Y	Y	H12-03B
	Red/yellow				H12-03R
1, 3R, 4, 4X, 12	Black				H4X-06B
	Red/yellow				H4X-06R
	Black	Y			H4X-06TB
	Red/yellow				H4X-06TR

Or

Metallic hasp (heavy duty) external front operated pistol handles - shaft required

NEMA type	Color	Test function	Padlockable	Defeatable	Catalog no.
1, 3R, 4, 4X, 12	Black	N	Y	Y	H4X-06BHD
1, 3R, 4, 4X, 12	Red/yellow				H4X-06RHD

External right side operated pistol handles - shaft required

NEMA type	Color	Test function	Padlockable	Defeatable	Catalog no.
1, 3R, 4, 4X, 12	Black	N	Y	N/A	H4X-06SB
	Red/yellow				H4X-06SR

+

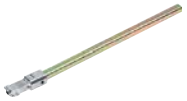

Shafts for pistol handles

Length — in (mm)	Mounting depth (X) - in (mm)	Catalog no.
7.9 (200)	5.30~9.06 (135~230)	SH5-200
12.6 (320)	5.30~13.78 (135~350)	SH5-320
15.7 (400)	5.30~16.93 (135~430)	SH5-400

OR

Flange handle (1) - requires shaft operated mechanism or cable operated mechanism + cable

NEMA type	Flange style	Test function	Padlockable	Defeatable	Catalog no.
1, 3R, 4, 12	Standard	N	Y	Y	FLH1
1, 3R, 4, 4X, 12	Chrome plated				FLH2

Shaft operated flange mechanism (2) - includes shaft

For enclosure depth — in (mm)	Catalog no.
6~24 (152~613)	FLRM

Cable operated flange mechanism and cable - must select mechanism (3) and cable (4)

Item / length — in (mm)	Catalog no.
Cable mechanism	FLCM
36 (900) cable	FLC36
60 (1500) cable	FLC60
120 (3000) cable	FLC120

OR

NFPA through the door handle kit - to be used with front pistol handle

Color	Test function	Padlockable	Defeatable	Catalog no.
Red	N	Y	N	H79-2

AND...

Accessories — Aux. contacts

Auxiliary contacts

Contact type	No. of contacts	Continuous amp rating	Voltage (Vac)	Max number of aux contacts per switch	Catalog no.
NO	1	10	600	4	BAC05
NC					BAC06

Dimensions — in (mm)

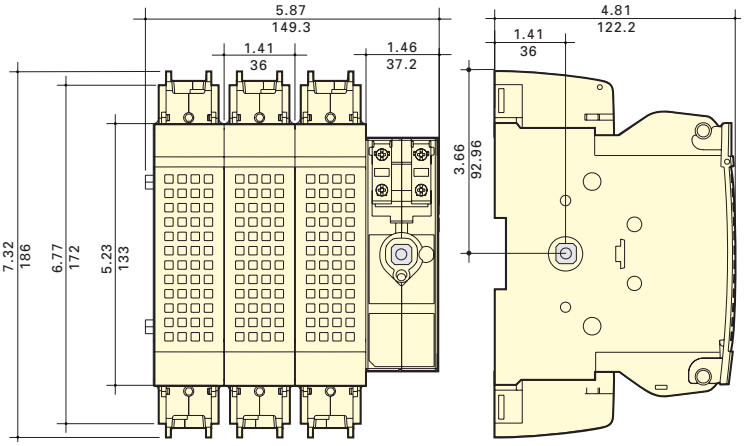

Direct mount handle

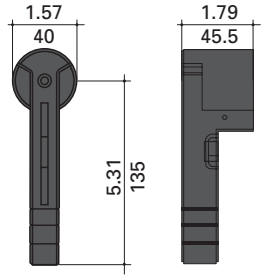

DIR-07

Flange handle

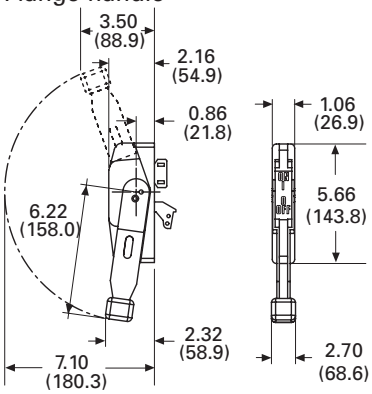

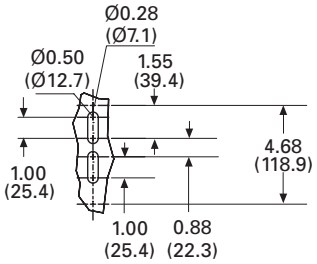

FLH_

External front and right side pistol handle

Handle type

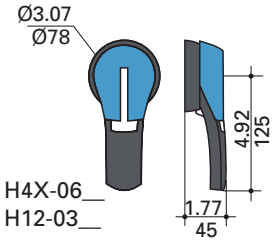

H4X-06__
H12-03__

Direction of front operation

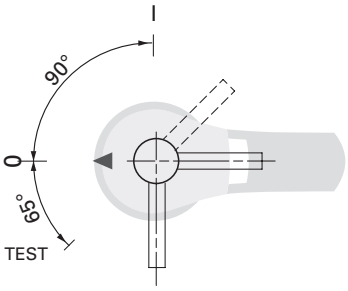

Direction of right side operation

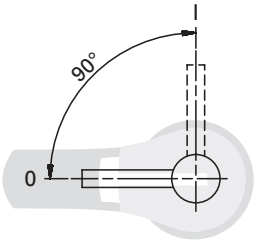

Door drilling layout

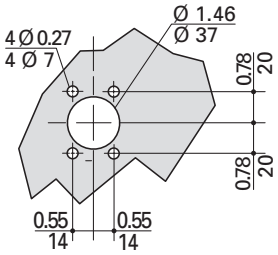

Standard 200 and 400 amp Class J

For a complete assembly, select:

Switch + lugs

+

Switch

Amps	Fuse class	Poles	SCCR (kA)	Max horsepower rating: 1-phase 220/240	3-phase 220/240	3-phase 440/480	3-phase 600	DC* 125	DC* 250	Catalog no.
200	J	2	200	10	-	-	-	-	-	RDF200J-2
		3		-	60	125	150	-	-	RDF200J-3
		4		-	60	125	150	-	-	RDF200J-4
400		2		10	-	-	-	20	50	RDF400J-2
		3		-	125	250	350	20	50	RDF400J-3
		4		-	125	250	350	20	50	RDF400J-4

* DC ratings use two poles in series.

Terminal lug kit

Switch amps	Poles	Lugs per kit	AWG wire / type	Catalog no.
200	2	2	6-300 kcmil 75°C Cu/Al	LUG1-2
	3	3		LUG1-3
	4	4		LUG1-4
400	2	2	4-600 kcmil or dual 1/0-250 kcmil 75°C Cu/Al	LUG2-2
	3	3		LUG2-3
	4	4		LUG2-4

PLUS

Select for standard applications — Handles

Direct mount handle - mounts directly to switch, no shaft required

For switch cat. no.	Color	Test function	Padlockable	Catalog no.
All switches	Black	Y	Y	DIR-07

OR

External front operated pistol handles - shaft required

NEMA type	Color	Test function	Padlockable	Defeatable	Catalog no.
1, 3R, 12	Black	N	Y	Y	H12-03B
	Red/yellow				H12-03R
1, 3R, 4, 4X, 12	Black				H4X-06B
	Red/yellow				H4X-06R
	Black	Y			H4X-06TB
	Red/yellow				H4X-06TR

Or

Metallic hasp (heavy duty) external front operated pistol handles - shaft required

NEMA type	Color	Test function	Padlockable	Defeatable	Catalog no.
1, 3R, 4, 4X, 12	Black	N	Y	Y	H4X-06BHD
	Red/yellow				H4X-06RHD

External right side operated pistol handles - shaft required

NEMA type	Color	Test function	Padlockable	Defeatable	Catalog no.
1, 3R, 4, 4X, 12	Black	N	Y	N/A	H4X-06SB
	Red/yellow				H4X-06SR

+

Shafts for pistol handles

Length — in (mm)	Mounting depth (X) — in (mm)	Catalog no.
7.9 (200)	200 A: 5.70-9.06 (145-230)	SH5-200
	400 A: 7.87-10.24 (200-260)	
12.6 (320)	200 A: 5.70-13.78 (145-350)	SH5-320
	400 A: 7.87-16.93 (200-380)	
15.7 (400)	200 A: 5.70-16.93 (145-430)	SH5-400
	400 A: 7.87-18.10 (200-460)	

OR

Flange handle (1) 200 A only - requires shaft operated mechanism or cable operated mechanism + cable

NEMA type	Flange style	Test function	Padlockable	Defeatable	Catalog no.
1, 3R, 4, 12	Standard	N	Y	Y	FLH1
1, 3R, 4, 4X, 12	Chrome plated				FLH2

Shaft operated flange mechanism (2) 200 A only - includes shaft

For enclosure depth — in (mm)	Catalog no.
6~24 (152~613)	FLRM

Cable operated flange mechanism and cable 200 A only - must select Mechanism (3) and Cable (4)

Item — in (mm)	Catalog no.
Cable mechanism	FLCM
36 (900) cable	FLC36
60 (1500) cable	FLC60
120 (3000) cable	FLC120

OR

NFPA through the door handle kit - to be used with front pistol handle

Use with switch	Color	Test function	Padlockable	Defeatable	Catalog no.
RDF200J-_	Red	N	Y	N	H79-2
RDF400J-_					H79-3

AND...

Accessories — Aux. contacts

Auxiliary contacts

Contact type	No. of contacts	Continuous amp rating	Voltage (Vac)	Max number of aux contacts per switch catalog number	Catalog no.
NO	1	10	600	RDF200J-__: 4	BAC05
NC				RDF400J-__: 8	BAC06

AND...

Accessories — Shrouds

Terminal shrouds - includes terminal shroud for lineside or loadside

Switch amps	Poles	Catalog no.
200	2	TSH8-2TB
	3	TSH8-3TB
	4	TSH8-4TB
400	2	TSH9-2TB
	3	TSH9-3TB
	4	TSH9-4TB

Disconnect switches

Dimensions — in (mm)

RDF200J-3

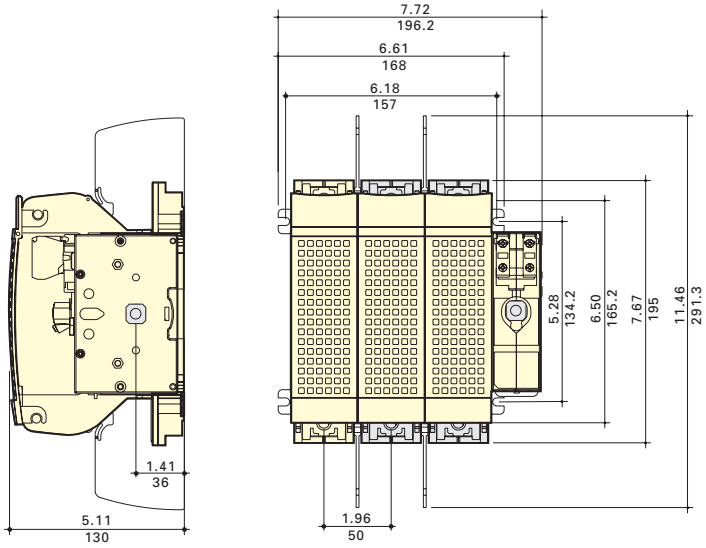

RDF400J-3

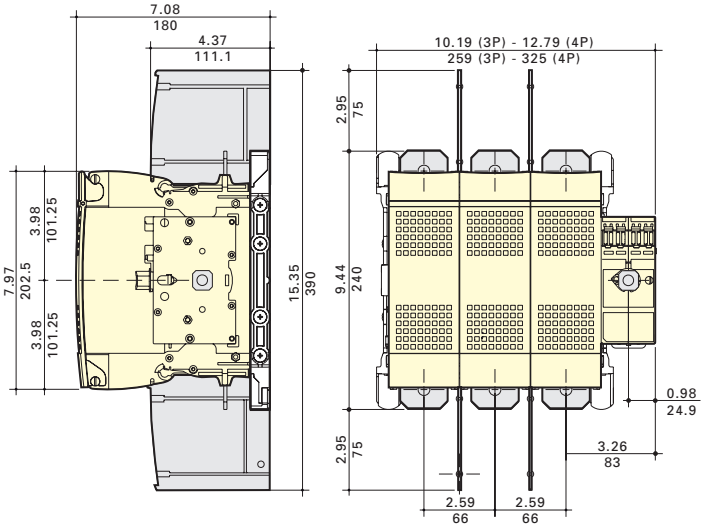

Dimensions — in (mm)

DIR-07 direct mount handle

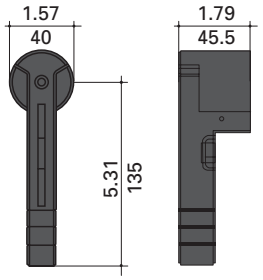

FLH_ flange handle

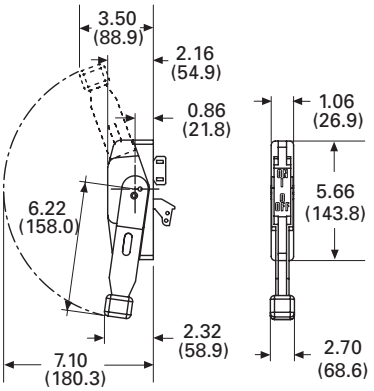

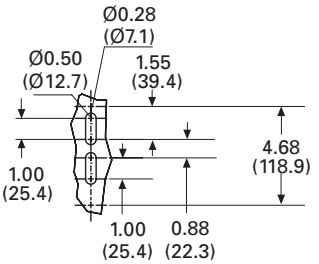

External front and right side pistol handle

Handle type

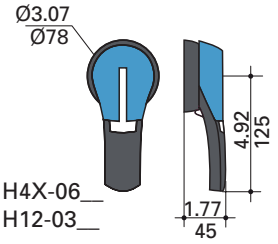

Direction of front operation

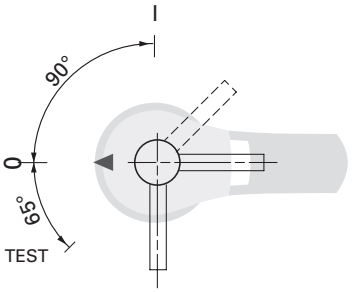

Direction of right side operation

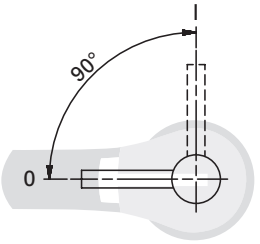

Door drilling layout

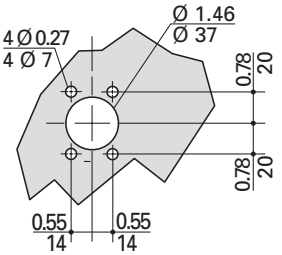

Terminal lugs

200 A (LUG1-__)

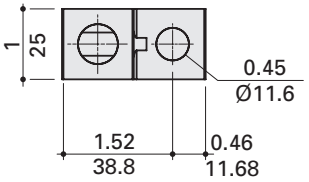

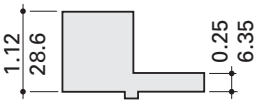

400 A (LUG2-__)

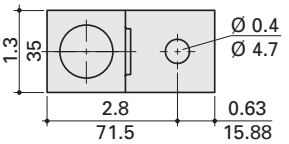

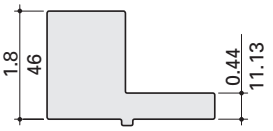

Standard 600 amp Class J and 800 amp Class L

For a complete assembly, select:

Select for standard application

Switch + lugs

+

Switch

Amps	Fuse class	Poles	SCCR (I)kA)	Max horsepower rating, 3-phase 220/240	440/480	600	Catalog no.
600	J	2	200	-	-	-	RDF600J-2
		3		200	400	500	RDF600J-3
		4		200	400	500	RDF600J-4
800	L	2		-	-	-	RDF800L-2
		3		200	500	500	RDF800L-3
		4		200	500	500	RDF800L-4

Terminal lug kit

Switch amps	Poles	Lugs per kit	Conductor AWG size / type	Catalog no.
600-800	2	2	(2) 2-600 kcmil 75°C Cu/ Al	LUG5-2
	3	3		LUG5-3
	4	4		LUG5-4

PLUS

Handles

Direct mount handle - mounts directly to switch, no shaft required

For switch cat. no.	Color	Test function	Padlockable	Defeatable	Catalog no.
All switches	Black	Y	Y	N	DIR-08

OR

Or

External front operated pistol handles - shaft required

NEMA type	Color	Test function	Padlockable	Defeatable	Catalog no.
1, 3R, 4, 4X, 12	Black	N	Y	Y	H4X-07B
	Red/yellow				H4X-07R

Metallic hasp (heavy duty) external front operated pistol handles - shaft required

NEMA type	Color	Test function	Padlockable	Defeatable	Catalog no.
1, 3R, 4, 4X, 12	Black	N	Y	Y	H4X-07BHD
	Red/yellow				H4X-07RHD

+

Shafts for pistol handles

Length — in (mm)	Mounting depth (X) — in (mm)	Catalog no.
7.9 (200)	10.63~11.97 (270~304)	SH7-200
12.6 (320)	10.63~16.69 (270~424)	SH7-320
15.7 (400)	10.63~19.84 (270~504)	SH7-400

OR

NFPA through the door handle kit - to be used with front pistol handle

For switch cat. no.	Color	Test function	Padlockable	Defeatable	Catalog no.
All switches	Red	N	Y	N	H79-4

AND...

Accessories

Aux. contacts

Auxiliary contacts

Contact type	No. of contacts	Continuous amp rating	Voltage (Vac)	Max number of aux contacts per switch	Catalog no.
NO	1	10	600	8	BAC05
NC					BAC06

AND...

Shrouds

Terminal shrouds - includes terminal shroud for lineside or loadside

Switch amps	Poles	Catalog no.
600-800	2	TSH10-2TB
	3	TSH10-3TB
	4	TSH10-4TB

Dimensions — in (mm)

RDF600J-3 and RDF800L-3

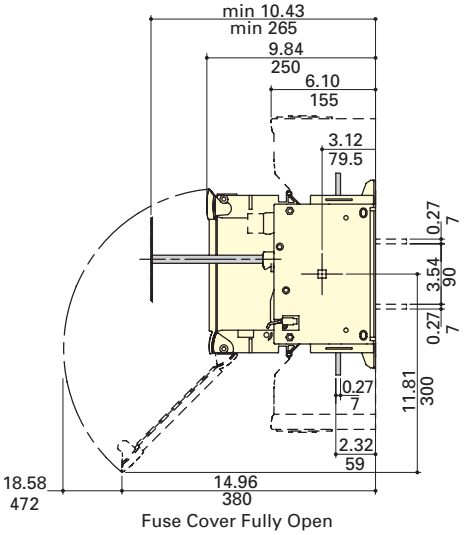

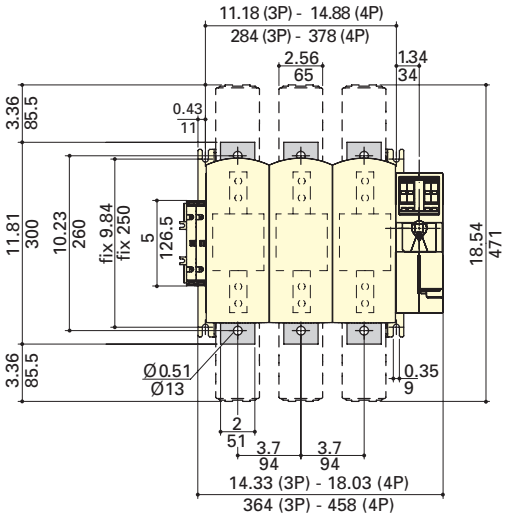

Dir-08 drect mount handle

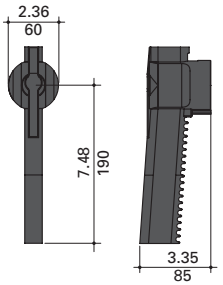

External front pistol handle

Handle type

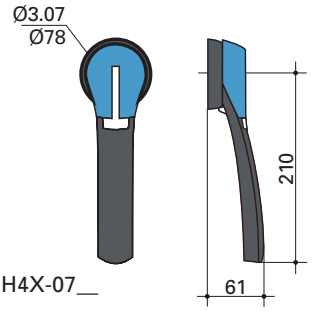

H4X-07__

Direction of front operation

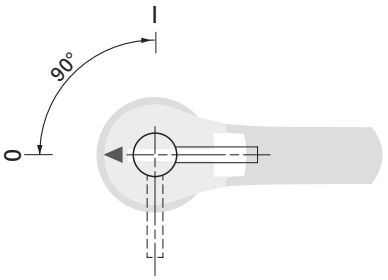

Door drilling layout

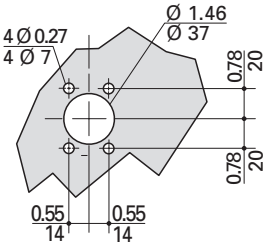

Terminal lugs

600 to 800 A (LUG5-__)

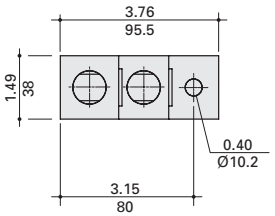

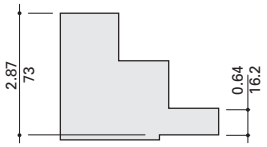

UL 98 non-fused rotary disconnect switches — 30 to 1200 amps

Bussmann series UL 98 non-fused rotary disconnect switches are versatile switches that "break" and "make" power circuits ON and OFF load.

Agency information

- UL 98, Guide WHTY, File E155130
- CSA 22.2 No. 4, File 257020
- Conforms with IEC 60947-3

Features

- Make and break power under load
- Up to 200 kA SCCR
- Panel mount (30-100 A compact DIN-Rail or panel mount)
- Disconnect switches are front, right side and direct handle operable (30-100 A)
- Finger-safe (30-100 A compact only)
- Fully visualized breaking (100-1200 A)

Online resources

Visit Eaton.com/bussmannseries for:

- CAD drawings
- Instruction sheets
- UL information

Related Bussmann series products

Fuse blocks
Modular Class H(K), J and RK fuse blocks up to 600 A
Modular Class H(K), J and RK power distribution fuse blocks up to 400 A
Modular, finger-safe CH Class CC and J, and UL supplemental and IEC 10x38mm DIN-Rail holders up to 60 A
Finger-safe Optima Class CC, UL supplemental and IEC 10x38mm DIN-Rail/panel mount holders up to 30 A
Finger-safe Optima™ Class CC, UL supplemental and IEC 10x38mm DIN-Rail/panel mount protection modules up to 30 A

RD30-3

RD200-3

RD600-3

IEC specifications

		Catalog no.									
3-pole		**RD30-3**	**RD60-3**	**RD100-3**	**RD100-3-SCCR**	**RD200-3**	**RD400-3**	**RD600-3**	**RD800-3**	**RD1000-3**	**RD1200-3**
4-pole		**—**	**—**	**—**	**—**	**RD200-4**	**RD400-4**	**RD600-4**	**RD800-4**	**RD1000-4**	**RD1200-4**
Thermal current I_{th} @ 40°C (A)		30	60	100	100	200	400	—	—	—	—
Rated insulation voltage U_i (V)		800	800	800	1000	1000	1000	1000	1000	1000	1000
Rated impulse withstand voltage U_{imp} (kV)		8	8	8	8	8	8	12	12	12	12
Rated operation currents I_e (A)											
Rated voltage (Vac)	Load duty category	A [1]	A [1]	A [1]	A [1]	A [1]	A [1]	A [1]	A [1]	A [1]	A [1]
400	AC-22 A	32	63	100	100	200	400	630	800	1000	1200
	AC-23 A										1000
690	AC-22 A			80				500	630	630	630
	AC-23 A			63			315	200	400	400	400
Operational power (Vac) in AC-23 (kW)											
400 V w/o prebreak AC [1, 2]		15	30	45	51	100	220	355	450	560	560
500 V w/o prebreak AC [1, 2]					63	140	280	450	560		
690 V w/o prebreak AC [1, 2]		18.5			90	185	185	185	400	400	400
Overload capacity (U_e 415 Vac)											
Rated short-circuit making capacity I_{cm} (kA peak) [3]		12	12	12	17.6	32	48	48	75	48	75
Fuse protected short-circuit withstand											
(kA RMS prospective)											
Short-circuit current (kA) [3]		50	50	25	200	200	200	100	100	100	100
Associated fuse rating (A) [3]		32	63	100	100		400	630	800	1000	1250
Connection											
Minimum Cu cable cross section (mm²)		2.5	2.5	10	35	70	185	2x150	2x185	2x240	—
Minimum Cu busbar section (mm²)		—	—	—	—	—	—	2x30x5	2x40x5	2x50x5	2x60x5
Maximum Cu cable section (mm²)		70	70	70	300	300	600	—	—	—	—

1 A/B: Category with index A = frequent operation; category with index B = infrequent operation.
2 The power value is given for information only; the current values vary from one manufacturer to another.
3 For a rated operating voltage, Ue = 400 Vac.

UL specifications

RD30-3 | RD200-3 | RD600-3

		Catalog no.									
3-pole		**RD30-3**	**RD60-3**	**RD100-3**	**RD100-3-SCCR**	**RD200-3**	**RD400-3**	**RD600-3**	**RD800-3**	**RD1000-3**	**RD1200-3**
4-pole		**—**	**—**	**—**	**—**	**RD200-4**	**RD400-4**	**RD600-4**	**RD800-4**	**RD1000-4**	**RD1200-4**
UL standard		UL 98	UL 98	UL 98	UL 98	UL 98	UL 98	UL 98	UL 98	UL 98	UL 98
Max ampacity		30 A	60 A	100 A	100 A	200 A	400 A	600 A	800 A	1000 A	1200 A
Switch type		Compact	Compact	Compact	Standard	Standard	Standard	Standard	Standard	Standard	Standard
Handle operation		Front/Side	Front/Side	Front/Side	Front	Front	Front	Front	Front	Front	Front
UL electrical ratings											
Max voltage (AC)		600 Vac	600 Vac	600 Vac	600 Vac	600 Vac	600 Vac	600 Vac	600 Vac	600 Vac	600 Vac
Max voltage (DC)		—	—	—	250 Vdc	250 Vdc	—	250 Vdc	—	—	—
Max. AC Hp ratings	1-phase, 120	2	3	5	—	—	—	—	—	—	—
	1-phase, 240	5	10	10	10	10	—	—	—	—	—
	3-phase, 240	10	20	20	30	75	125	200	200	200	200
	3-phase, 480	20	40	50	75	150	250	400	500	500	500
	3-phase, 600	25	50	50	100	200	350	350	500	500	500
DC Hp ratings	125	—	—	—	—	—	—	20	—	—	—
	250	—	—	—	—	—	—	50	—	—	—
Electrical characteristics											
SCCR with fuse (kA)		100	100	25 /100*	200	200	200	200	100	100	100
Fuse class		J	J	J	J	J	J	J	L	L	L
Max. fuse rating (A)		30	60	100	10A	200	400	600	800	1000	1200
Terminal lugs/kits		Integral	Integral	Integral	•	•	•	•	•	•	•
Lug mounting torque - lb-in (N•m)		—	—	—	160 (18)	160 (18)	LUG2-_ 310 (35) LUG3-_ 398 (45)	310 (35)	310 (35)	310 (35)	310 (35)
Wire type		75°C Cu	75°C Cu	75°C Cu	75°C Cu/ Al	75°C Cu/ Al	75°C Cu/ Al	75°C Cu/ Al	75°C Cu/ Al	75°C Cu/ Al	75°C Cu/ Al
Wire range and torque - lb-in (N•m)	Solid	12-10, 35.4 (4)	12-10, 35.4 (4)	12-10, 35.4 (4)	—	—	—	—	—	—	—
	Stranded	10-1, 35.4 (4)	10-1, 35.4 (4)	10-1, 35.4 (4)	6-300 kcmil, 275 (31)	6-300 kcmil, 275 (31)	LUG2-_ 4-600 kcmil, 550 (62)	(2) 2-600 kcmil, 375 (42.4)	(4) 2-600 kcmil, 375 (42.4)	(4) 2-600 kcmil, 375 (42.4)	(4) 2-600 kcmil, 375 (42.4)
		1/0, 39.8 (4.5)	1/0, 39.8 (4.5)	1/0, 39.8 (4.5)			Dual 1/0-250 kcmil, 550 (62)				
		2/0, 44.3 (5)	2/0, 44.3 (5)	2/0, 44.3 (5)			LUG3-_: (2) 6-2, 200 (22.6)				
							(2) 1-350 kcmil, 375 (42.4)				
Mechanical characteristics											
Endurances/Cycles		10,000	10,000	10,000	10,000	8000	6000	6000	3500	3500	3500
Physical characteristics											
Dimensions		See drawings on product pages									
Weight - lbs (kg)	3-pole	1.3 (0.6)	1.3 (0.6)	1.3 (0.6)	4.2 (1.91)	4.2 (1.91)	10.0 (4.6)	18.1 (8.2)	19.6 (8.9)	19.6 (8.9)	19.6 (8.9)
	4-pole	—	—	—	—	5.0 (2.3)	12.3 (5.6)	23.9 (10.9)	25.3 (11.5)	25.3 (11.5)	25.3 (11.5)
Environmental											
Operating Temperature		-20 to 70°C	-20 to 70°C	-20 to 70°C	-20 to 70°C	-20 to 70°C	-20 to 70°C	-20 to 70°C	-20 to 70°C	-20 to 70°C	-20 to 70°C
Flammability Rating		UL 94-V0	UL 94-V0	UL 94-V0	UL 94-V0	UL 94-V0	UL 94-V0	UL 94-V0	UL 94-V0	UL 94-V0	UL 94-V0
Accessories											
Lug kit cat. no.	3-pole	Integral	Integral	Integral	•	•	•	•	•	•	•
	4-pole	—	—	—	—	•	•	•	•	•	•
Handles	NEMA 1, 3R, 12	•	•	•	•	•	•	—	—	—	—
	NEMA 1, 3R, 4, 4X, 12	•	•	•	•	•	•	•	•	•	•
	Direct	•	•	•	•	•	•	•	•	•	•
	Front Pistol	•	•	•	•	•	•	•	•	•	•
	Front or Side Selector	•	•	•	—	—	—	—	—	—	—
Shaft c/s - mm		5x5	5x5	5x5	10x10	10x10	10x10	12x12	12x12	12x12	12x12
Shaft guide		•	•	•	•	•	•	•	•	••	•
Shrouds		•	•	•	•	•	•	•	•	•	•
Additional pole accessory		•	•	•	—	—	—	—	—	—	—
Auxiliary contacts	NO + NC	•	•	•	•	•	•	•	•	•	•
	(2) NO	•	•	•	—	—	—	—	—	—	—

• Available, see product page for details and catalog numbers.
— Not available.
* 25 kA @ 600 Vac, 100 kA @ 480 Vac.

UL 98 non-fused rotary disconnect switches — 30, 60 and compact 100 A

For a complete assembly, select:

Select for standard application

Switch

Amps	Poles	SCCR (kA)	Max horsepower rating 1-phase 120	1-phase 220/240	3-phase 220/240	3-phase 440/480	3-phase 600	Conductor AWG size/type	Catalog no.
30	3	100	2	5	10	20	25	10-2/0 Str/12-10 Sol 75°C Cu	RD30-3
60			3	10	20	40	50		RD60-3
100		25/100*	5	10	20	50	50		RD100-3

* 100 kA @480 Vac, 25 kA @ 600 Vac.

PLUS

Handles

Direct mount handle - mounts directly to switch, no shaft required

For switch cat. no.	Color	Test function	Padlockable	Catalog no.
All switches	Black	N	Y - On Switch	DIR-02

OR

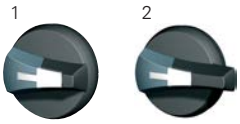

External front or right side operated selector handles - shaft required

NEMA type	Color	Handle length	Test function	Padlockable	Catalog no.
1, 3R, 4, 4X, 12	Black	Short	N	Y	H4X-01B (1)
	Red/yellow	Short			H4X-01R (1)
	Black	Long			H4X-02B (2)
	Red/yellow	Long			H4X-02R (2)

Or

External front operated pistol handles - shaft required

NEMA type	Color	Handle length	Test function	Padlockable	Defeatable	Catalog no.
1, 3R, 4, 4X, 12	Black	—	N	Y	Y	H4X-03B
	Red/yellow	—				H4X-03R

Metallic hasp (heavy duty) external front operated pistol handles - shaft required

NEMA type	Color	Handle length	Test function	Padlockable	Defeatable	Catalog no.
1, 3R, 4, 4X, 12	Black	—	N	Y	Y	H4X-03BHD
	Red/yellow	—				H4X-03RHD

+

1

Shafts for selector handles

Length — in (mm)	Mounting depth (X) — in (mm)	Catalog no.
5.9 (150)	3.50~7.60 (89~193)	SH4-150 (1)
7.9 (200)	3.50~9.50 (89~241)	SH4-200 (1)
12.6 (320)	3.50~14.9 (89~378)	SH4-320 (1)

2

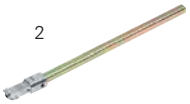

Shafts for pistol handles

Length — in (mm)	Mounting depth (X) - in (mm)	Catalog no.
7.9 (200)	3.30~7.40 (84~188)	SH3-200 (2)
12.6 (320)	3.30~9.30 (84~236)	SH3-320 (2)
15.7 (400)	3.30~14.7 (84~373)	SH3-400 (2)

+

Shaft guide for selector handles

	Catalog no.
Required for 12.6" (320mm) long shafts, optional for other lengths	SH-GUIDE1

Shaft guide for pistol handles

	Catalog no.
Required for 15.7î (400mm) long shafts, optional for other lengths	SH-GUIDE2

AND...

Accessories

Aux. contacts

Auxiliary contacts

Contact type	No. of contacts	Continuous amp rating	Voltage (Vac)	Max number of units per switch	Catalog no.
NO + NC	1 of each	10	240	2 (1 per side/4 contacts total)	BAC01
NO	2			2 (1 per side/4 contacts total)	BAC02

AND...

Shrouds

Terminal shrouds - includes terminal shroud for both lineside and loadside

Switch amps	Poles	Location on switch	Catalog no.
All switch-es	1 (for switched 4th pole)	Lineside and loadside	TSH3-1TB
	3		TSH3-3TB

AND...

Sw. 4th pole

Switched 4th Pole - converts 3-pole switch to 4-pole

Switch amps	Catalog no.
30	POLE98-30
60	POLE98-60
100	POLE98-100

Auxiliary contact configurations

Possible 4th pole configurations

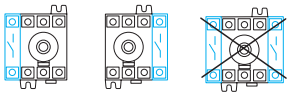

Dimensions - in (mm)

Direct handle operation

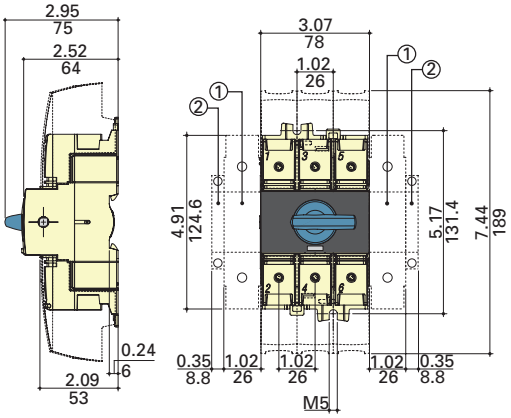

External front operation

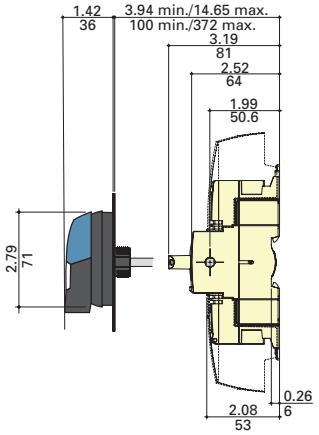

External right side operation

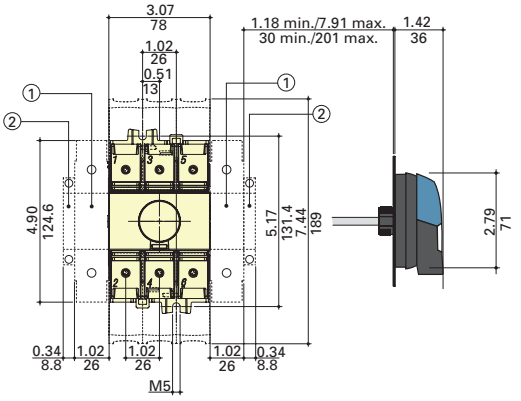

1. Position for 1 switched 4th pole (1 per device max.) or 1 auxiliary contact.
2. Position for 1 auxiliary contact only.

Note: Maximum of 4 Auxiliary contacts, or 3 Auxiliary contacts + one switched 4th pole.

External front/right side operated selector handle, front operated pistol handle

Handle type

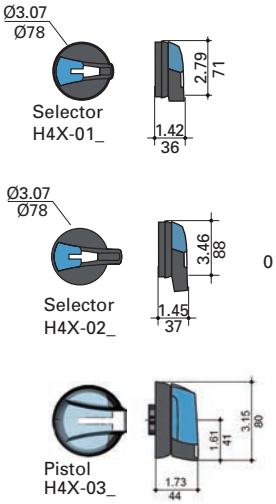

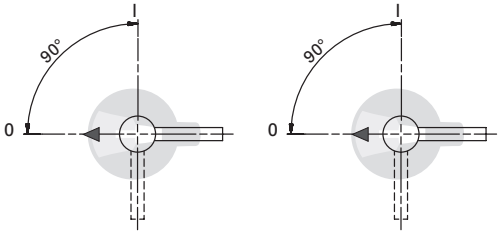

Door drilling layouts

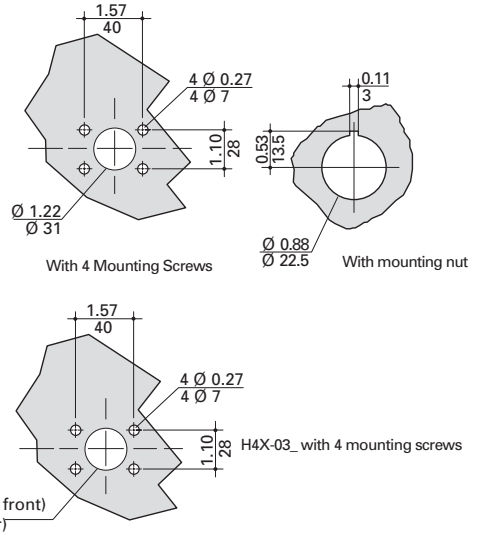

UL 98 non-fused rotary disconnect switches—100, 200 and compact 400 A

For a complete assembly, select:

Select for standard application

Switch

+

Switch

Amps	Poles	SCCR (kA)	Max horsepower rating 1-phase 220/240	3-phase 220/240	3-phase 440/480	3-phase 600	Catalog no.
100	3	200	10	30	75	100	RD100-3-SCCR
200	3		10	75	150	200	RD200-3
	4		10	75	150	200	RD200-4
400	3		-	125	250	350	RD400-3
	4		-	125	250	350	RD400-4

Terminal lug kit

Switch amps	Poles	Lugs per kit	Conductor AWG size/type	Catalog no.
100-200	2	2	6-300 kcmil 75°C Cu/ Al	LUG1-2
	3	3		LUG1-3
	4	4		LUG1-4
400	2	2	4-600 kcmil or Dual 1/0-250 kcmil 75°C Cu/ Al	LUG2-2
	3	3		LUG2-3
	4	4		LUG2-4
	2	2	(2) 6-350 kcmil 75°C Cu/ Al	LUG3-2
	3	3		LUG3-3
	4	4		LUG3-4

PLUS

Handle

Direct mount handle - mounts directly to switch, no shaft required

For switch cat. no.	Color	Test function	Padlockable	Catalog no.
All switches	Black	N	Y	DIR-03

OR

Or

External front operated pistol handles - shaft required

NEMA type	Color	Test function	Padlockable	Defeatable	Catalog no.
1, 3R, 12	Black	N	Y	Y	H12-03B
	Red/yellow				H12-03R
1, 3R, 4, 4X, 12	Black				H4X-06B
	Red/yellow				H4X-06R

Metallic hasp (heavy duty) external front operated pistol handles - shaft required

NEMA type	Color	Test function	Padlockable	Defeatable	Catalog no.
1, 3R, 4, 4X, 12	Black	N	Y	Y	H4X-06BHD
	Red/yellow				H4X-06RHD

+

Shafts for pistol handles

Length — in (mm)	Mounting depth (X) - in (mm)	Catalog no.
7.9 (200)	5.31~10.43 (135~265)	SH5-200
12.6 (320)	5.31~15.16 (135~385)	SH5-320
15.7 (400)	5.31~18.31 (135~465)	SH5-400

+

Shaft Guide

	Catalog no.
Required for 15.7î (400mm) long shafts, optional for other lengths	SH-GUIDE2

AND...

Accessories

Aux. contacts

Auxiliary contacts

Contact type	No. of contacts	Continuous amp rating	Voltage Vac	Max number of aux contacts per switch	Catalog no.
NO + NC	1 of each	10.1	125-250	2	BAC03*
NO + NC					BAC04*
NO + NC		1	125		BAC11*
NO + NC					BAC12*

* For one auxiliary contact, install either BAC03 or BAC11. For two auxiliary contacts, install BAC03 + BAC04, or BAC11 + BAC12.

AND...

Shrouds

Terminal shrouds - includes terminal shroud for Lineside or loadside

Switch amps	Poles	Location on switch	Catalog no.
100-200	3	Lineside	TSH4-3T
		Loadside	TSH4-3B
	4	Lineside or loadside	TSH4-4TB
400	3	Lineside	TSH5-3T
		Loadside	TSH5-3B
	4	Lineside or loadside	TSH5-4TB

Dimensions — in (mm)

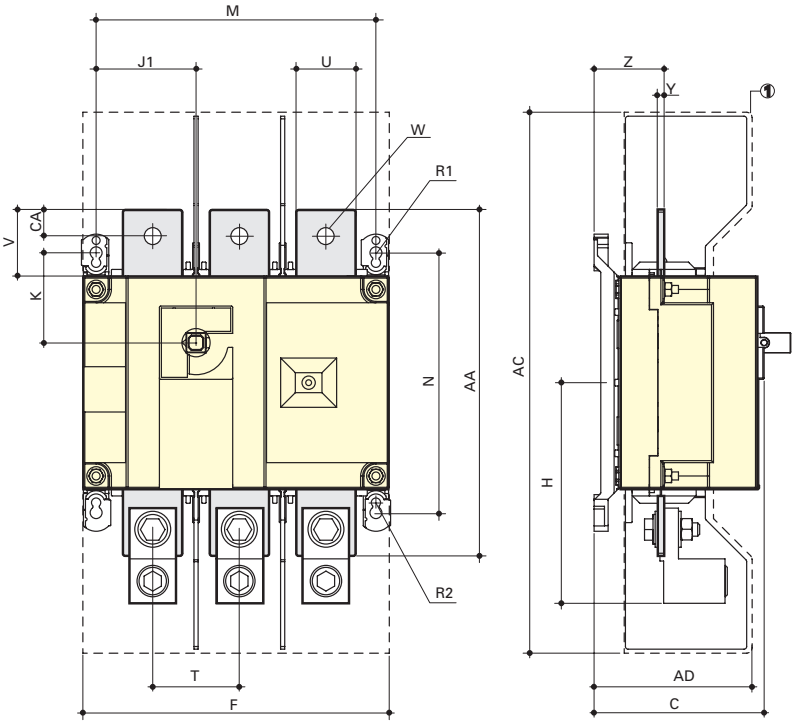

Switch amps	Overall dim. C	Terminal shrouds AC	Terminal shrouds AD	Switch body F 3p.	Switch body F 4p.	Switch body H	Switch body J1 3p.	Switch body J1 4p.	Switch body K	Switch body M 3p.	Switch body M 4p.	Switch mounting N	Switch mounting R1	Switch mounting R2	Switch mounting T	Switch mounting U	Connection V	Connection W	Connection Y	Connection Z	Connection A A	Connection AC
100	3.72 (95)	10.1 (256)	3.05 (78)	7.09 (180)	9.06 (230)	4.22 (107)	2.17 (55)	4.13 (105)	1.8 (46)	6.3 (160)	8.27 (210)	5.31 (135)	0.35 (9)	0.27 (7)	1.97 (50)	0.98 (25)	1.18 (30)	0.43 (11)	0.14 (4)	1.35 (34)	6.3 (160)	0.6 (15)
200	3.72 (95)	10.1 (256)	3.05 (78)	7.09 (180)	9.06 (230)	4.22 (107)	2.17 (55)	4.13 (105)	1.8 (46)	6.3 (160)	8.27 (210)	5.31 (135)	0.35 (9)	0.27 (7)	1.97 (50)	0.98 (25)	1.18 (30)	0.43 (11)	0.14 (4)	1.35 (34)	6.3 (160)	0.6 (15)
400	4.92 (128)	16 (406)	4.15 (115)	9.05 (230)	11.4 (290)	6.53 (166)	2.95 (75)	5.31 (135)	2.65 (68)	8.26 (210)	10.6 (270)	7.67 (195)	0.35 (9)	0.27 (7)	2.56 (65)	1.77 (45)	1.97 (50)	0.43 (13)	0.2 (5)	2.08 (53)	10.2 (260)	0.8 (20)

DIR-03 direct mount handle

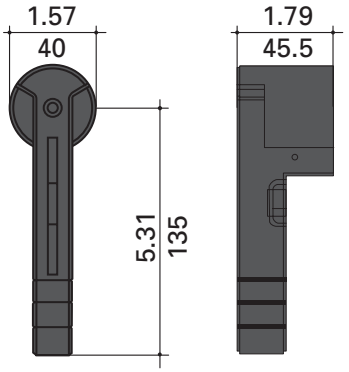

External front handle

Handle type

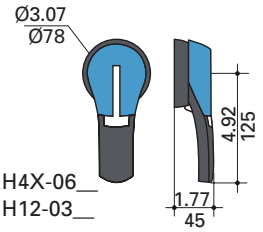

Direction of front operation

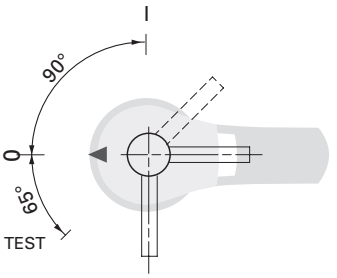

Door drilling layout

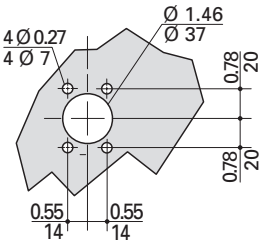

Terminal lugs

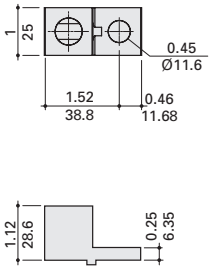

LUG1-_ 100 to 200 A

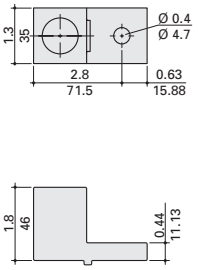

LUG2-_ 400 A

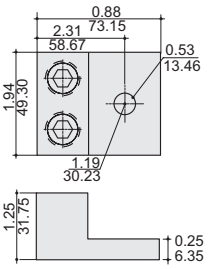

LUG3-_ 400 A

UL 98 non-fused rotary disconnect switches — 600, 800, 1000 and 1200 A

For a complete assembly, select:

Select for standard application

Switch

Amps	Poles	SCCR (kA)	Max horsepower rating 3-phase 220/240	3-phase 440/480	3-phase 600	DC* 125	DC* 250	Catalog no.
600	3	200	240	400	350	20	50	RD600-3
	4		240	400	350	20	50	RD600-4
800	3	100	200	500	500	-	-	RD800-3
	4		200	500	500	-	-	RD800-4
1000	3		200	500	500	-	-	RD1000-3
	4		200	500	500	-	-	RD1000-4
1200	3		200	500	500	-	-	RD1200-3
	4		200	500	500	-	-	RD1200-4

* DC ratings use two poles in series.

+

Terminal lug kit

Switch amps	Poles	Lugs per kit	Lugs required per pole	Conductor AWG size/type	Catalog no.
600	3	3	1	(2) 2-600 kcmil 75°C Cu/ Al	LUG5-3
	4	4			LUG5-4
800-1200	3	6	2	(4) 2-600 kcmil 75°C Cu/ Al	LUG6-6
	4	8			LUG6-8

PLUS

Direct mount handle - mounts directly to switch, no shaft required

For switch cat. no.	Color	Test function	Padlockable	Catalog no.
All switches	Black	N	Y	DIR-04

OR

Handles

1 2

3 Or 4

External front operated pistol handles - shaft required

NEMA type	Color	Test function	Padlockable	Defeatable	Catalog no.
1, 3R, 4, 4X, 12	Black	N	Y	Y	H4X-07B (1)
	Red/yellow				H4X-07R (1)
	Black				H4X-08B (2)
	Red/yellow				H4X-08R (2)

Metallic hasp (heavy duty) external front operated pistol handles - shaft required

NEMA type	Color	Test function	Padlockable	Defeatable	Catalog no.
1, 3R, 4, 4X, 1	Black	N	Y	Y	H4X-07BHD (3)
	Red/yellow				H4X-07RHD (3)
	Black				H4X-08BHD (4)
	Red/yellow				H4X-08RHD (4)

+

Shafts for pistol handles

Length — in (mm)	Mounting depth (X) — in (mm)	Catalog no.
7.9 (200)	8.70~13.50 (221~343)	SH6-200
12.6 (320)	8.70~18.23 (221~463)	SH6-320
15.7 (400)	8.70~21.38 (221~543)	SH6-400

+

Shaft guide

	Catalog no.
Required for 15.7" (400mm) long shafts, optional for other lengths	SH-GUIDE2

AND...

Accessories

Aux. contacts

Auxiliary contacts

Contact type	No. of contacts	Continuous amp rating	Voltage (Vac)	Max number of aux contacts per switch	Catalog no.
NO + NC	1 of each	10.1	125-250	2	BAC03*
NO + NC	1 of each				BAC04*
NO + NC	1 of each	1	125		BAC11*
NO + NC	1 of each				BAC12*

* For one auxiliary contact, install either BAC03 or BAC11. For two auxiliary contacts, install BAC03 + BAC04, or BAC11 + BAC12.

AND...

Shrouds

Terminal shrouds* — includes terminal shroud for lineside or loadside

Switch amps	Poles	Location on switch	Catalog no.
600	3	Lineside or loadside	TSH6-3TB
	4		TSH6-4TB
800-1200	3		TSH7-3TB
	4		TSH7-4TB

* Shroud for lineside included with switch.

Dimensions — in (mm)

600 A

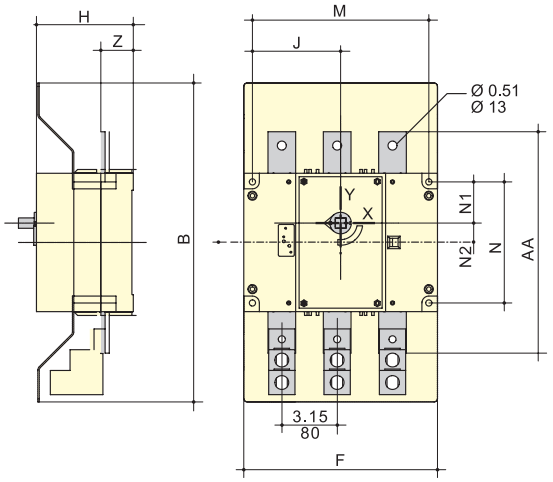

800 to 1200 A

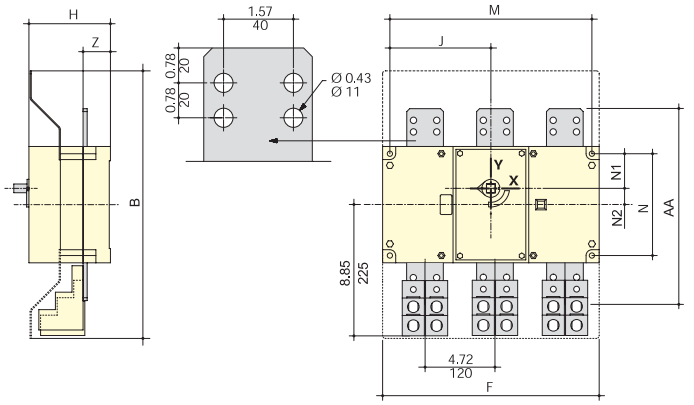

Switch amps	Terminal shrouds B	Switch body						Switch mounting				Connection	
		F 3p.	F 4p.	H	J 3p.	J 4p.	M 3p.	M 4p.	N	N1	N2	A A	Z
600	18.12 (460)	11 (280)	14.17 (360)	5.5 (140)	5 (128)	6.59 (168)	10.03 (255)	13.19 (335)	6.88 (175)	2.34 (60)	1.1 (28)	12.6 (320)	1.85 (47)
800	18.12 (460)	14.64 (372)	19.37 (492)	5.5 (140)	6.83 (174)	9.19 (234)	13.66 (347)	18.38 (467)	6.88 (175)	2.34 (60)	1.1 (28)	13 (330)	1.85 (47)
1000	18.12 (460)	14.64 (372)	19.37 (492)	5.5 (140)	6.83 (174)	9.19 (234)	13.66 (347)	18.38 (467)	6.88 (175)	2.34 (60)	1.1 (28)	13 (330)	1.85 (47)
1200	18.12 (460)	14.64 (372)	19.37 (492)	5.5 (140)	6.83 (174)	9.19 (234)	13.66 (347)	18.38 (467)	6.88 (175)	2.34 (60)	1.1 (28)	13 (330)	1.85 (47)

DIR-04 Direct mount handle

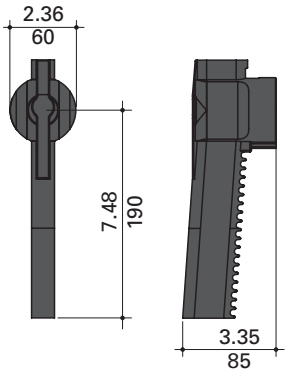

Terminal lugs

External front pistol handles

Handle Type

Direction of Front Operation

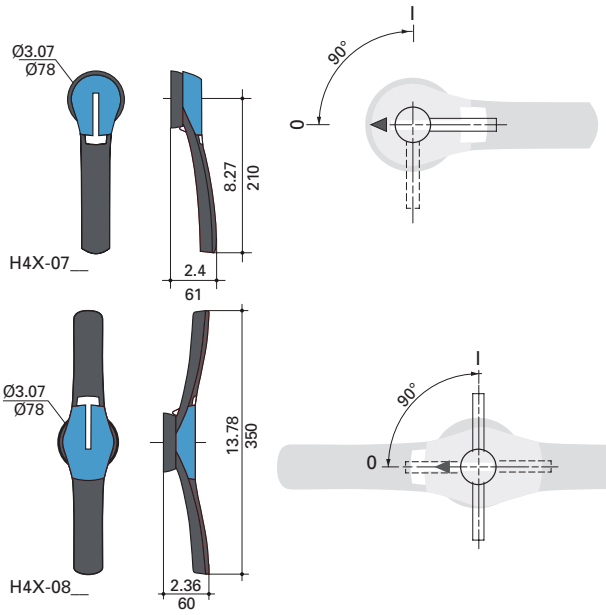

Door drilling layout

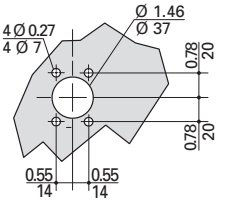

LUG5-__, LUG6-__ 600 to 1200 A

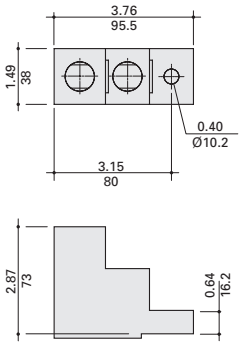

UL 508 non-fused rotary disconnect switches — 16 to 80 A

Eaton UL 508 load break disconnect switches allow safe control and safe disconnection of any motor application or to isolate a circuit within the panel.

These disconnect switches are compact and offer a wide variety of accessories like 4th poles, Auxiliary contacts, door mounting and 6/8-Pole kits.

Features

- Suitable for motor disconnect
- DIN-Rail or panel mount
- Door mount option
- Disconnect switches are front, right side or direct handle operable
- Finger-safe

Agency information

- UL 508, Guide NLRV, File E155129
- CSA C22.2 No. 14, File 257020
- Conforms with IEC 60947-3

Online resources

Visit Eaton.com/bussmannseries for:

- CAD drawings
- Instruction sheets
- UL information

Related Bussmann series products

Fuse blocks
Modular Class H(K), J and RK fuse blocks up to 600 A
Modular Class H(K), J and RK power distribution fuse blocks up to 400 A
Modular, finger-safe CH Class CC and J, and UL supplemental and IEC 10x38mm DIN-Rail holders up to 60 A
Finger-safe Optima Class CC, UL supplemental and IEC 10x38mm DIN-Rail/panel mount holders up to 30 A
Finger-safe Optima™ Class CC, UL supplemental and IEC 10x38mm DIN-Rail/panel mount protection modules up to 30 A

IEC specifications

RD16-3-508

RD16-3-508 with 6-pole conversion kit

Catalog no.		RD16-3-508	RD25-3-508	RD40-3-508	RD63-3-508	RD80-3-508
Thermal current I_{th} at 40°C (A)		16	25	40	63	80
Rated insulation voltage U_i (V)		800	800	800	800	800
Rated impulse withstand voltage U_{imp} (kV)		8	8	8	8	8
Rated operation currents Ie (A)						
Load duty category	Rated voltage	A/B [1]	A/B [1]	A/B [1]	A/B [1]	A/B [1]
500	AC-22 A/ AC-22 B	16/16	25/25	40/40	63/63	80/80
	AC-23A/ AC-23 B	16/16	25/25	25/25	63/63	63/63
690	AC-21 A/ AC-21 B	16/16	25/25	40/40	63/63	80/80
	AC-22 A/ AC-22 B	16/16	25/25	32/40	40/63	63/80
	AC-23A/ AC-23 B	16/16	25/25	25/25	40/40	40/40
Operational power in AC-23 (kW)						
400 Vac without prebreak AC [1, 2]		7.5	11	18.5	30	37
500 Vac without prebreak AC [1, 2]		7.5	11	15	30	37
690 Vac without prebreak AC [1, 2]		7.5	15	18.5	30	37
Overload capacity (U_e 415 Vac)						
Rated short-time withstand current 0.3 s. ICW (kA RMS) [3]		2.5	2.5	2.5	3	3
Rated short-time making capacity I_{cm} (kA peak) [3]		6	6	6	9	9
Fuse protected short-circuit withstand (kA RMS prospective)						
Prospective short-circuit current (kA RMS) [3]		50	50	50	50	50
Associated fuse rating (A) [3]		16	25	40	63	80
Connection						
Minimum Cu cable cross section (mm²)		1.5	1.5	1.5	2.5	2.5
Maximum Cu cable section (mm²)		16	16	16	35	35
Tightening torque min/max (N•m)		2/2.2	2/2.2	2/2.2	3.5/3.85	3.5/3.85

1 A/B: Category with index A = frequent operation; category with index B = infrequent operation.
2 The power value is given for information only; the current values vary from one manufacturer to another.
3 For a rated operating voltage, U_e = 400 Vac.

UL specifications

RD16-3-508

RD16-3-508 with 6-pole conversion kit

Catalog no.		RD16-3-508	RD25-3-508	RD40-3-508	RD63-3-508	RD80-3-508
UL standard		UL 508	UL 508	UL 508	UL 508	UL 508
Max ampacity		16 A	25 A	40 A	63 A	80 A
Handle operation		Front/Side	Front/Side	Front/Side	Front/Side	Front/Side
UL ratings						
Max voltage (AC)		600 Vac	600 Vac	600 Vac	600 Vac	600 Vac
Max. Hp ratings	3-phase, 208	3	7.5	7.5	15	15
	3-phase, 240	5	7.5	7.5	20	20
	3-phase, 480	10	15	20	40	40
	3-phase, 600	10	20	25	40	40
Electrical characteristics						
SCCR with fuse (kA)		65	65	10/65	50/65	50/65
Recommended upstream	Fuse class	J	J	J	J	J
	Max. fuse rating (A)	30	30	60/30	100/60	100/60
Terminals		Integral	Integral	Integral	Integral	Integral
Wire type		75°C Cu	75°C Cu	75°C Cu	75°C Cu	75°C Cu
Wire range and torque - lb-in (N•m)	Solid single	14-10, 26.5 (3)	14-10, 26.5 (3)	14-10, 26.5 (3)	14-10, 31.1 (3.5)	14-10, 31.1 (3.5)
	Solid dual	12, 26.5 (3)	12, 26.5 (3)	12, 26.5 (3)	12, 31.1 (3.5)	12, 31.1 (3.5)
	Stranded single	14-4, 26.5 (3)	14-4, 26.5 (3)	14-4 , 26.5 (3)	14-1, 31.1 (3.5)	14-1, 31.1 (3.5)
	Stranded dual	14-12, 26.5 (3)	14-12, 26.5 (3)	14-12, 26.5 (3)	10-6, 31.1 (3.5)	10-6, 31.1 (3.5)
Mechanical characteristics						
Endurances/cycles		10,000	10,000	10,000	10,000	10,000
Physical characteristics						
Dimensions		See drawings on product pages				
Weight- lb (kg)		0.5 (0.2)	0.5 (0.2)	0.5 (0.2)	0.7 (0.32)	0.7 (0.32)
Environmental						
Operating temperature		-20 to 70°C	-20 to 70°C	-20 to 70°C	-20 to 70°C	-20 to 70°C
Flammability rating		UL 94-V0	UL 94-V0	UL 94-V0	UL 94-V0	UL 94-V0
Accessories						
Handles	Direct	DIR-01	DIR-01	DIR-01	DIR-01	DIR-01
	Short selector/NEMA 1, 3R, 4, 4X, 12	H4X-01B	H4X-01B	H4X-01B	H4X-01B	H4X-01B
		H4X-01R	H4X-01R	H4X-01R	H4X-01R	H4X-01R
	Long selector/NEMA 1, 3R, 4, 4X, 12	H4X-02B	H4X-02B	H4X-02B	H4X-02B	H4X-02B
		H4X-02R	H4X-02R	H4X-02R	H4X-02R	H4X-02R
	Pistol handle/NEMA 1, 3R, 4, 4X, 12	H4X-03B	H4X-03B	H4X-03B	H4X-03B	H4X-03B
		H4X-03R	H4X-03R	H4X-03R	H4X-03R	H4X-03R
	Metallic hasp (HD) pistol handle/ NEMA 1, 3R, 4, 4X, 12	H4X-03BHD	H4X-03BHD	H4X-03BHD	H4X-03BHD	H4X-03BHD
		H4X-03RHD	H4X-03RHD	H4X-03RHD	H4X-03RHD	H4X-03RHD
Selector handle shafts - 5x5mm	5.9"/150mm	SH4-150	SH4-150	SH4-150	SH4-150	SH4-150
	7.9"/200mm	SH4-200	SH4-200	SH4-200	SH4-200	SH4-200
	12.6"/320mm	SH4-320	SH4-320	SH4-320	SH4-320	SH4-320
Pistol handle shafts - 5x5mm	7.9"/200mm	SH3-200	SH3-200	SH3-200	SH3-200	SH3-200
	12.6"/320mm	SH3-320	SH3-320	SH3-320	SH3-320	SH3-320
	15.75"/400mm	SH3-400	SH3-400	SH3-400	SH3-400	SH3-400
Selector handle shaft guide		SH-GUIDE1	SH-GUIDE1	SH-GUIDE1	SH-GUIDE1	SH-GUIDE1
Pistol handle shaft guide		SH-GUIDE2	SH-GUIDE2	SH-GUIDE2	SH-GUIDE2	SH-GUIDE2
Door mount kit		DOOR-508	DOOR-508	DOOR-508	DOOR-508	DOOR-508
Shrouds/switch amps	1-Pole	TSH1-1TB	TSH1-1TB	TSH1-1TB	—	—
	3-Pole (loadside and lineside)	TSH1-3TB	TSH1-3TB	TSH1-3TB	TSH2-3TB	TSH2-3TB
	Switched 4th pole/switch amps	POLE-16	POLE-25	POLE-40	—	—
	Ground module (conforms to IEC 60947-3)	GND-16-40	GND-16-40	GND-16-40	GND-63-80	GND-63-80
	Neutral module (conforms to IEC 60947-3)	NTRL-16-40	NTRL-16-40	NTRL-16-40	NTRL-63-80	NTRL-63-80
Auxiliary contacts	NO + NC (1 ea.)	BAC01	BAC01	BAC01	BAC01	BAC01
	(2) NO	BAC02	BAC02	BAC02	BAC02	BAC02
	AC ratings					
	Volts	240 Vac	240 Vac	240 Vac	240 Vac	240 Vac
	Amps	10	10	10	10	10
6-/8-pole conversion kit gangs two switches of same rating, 16-80 A switch amps		KIT-6POLE	KIT-6POLE	KIT-6POLE	KIT-6POLE	KIT-6POLE

— Not available.

UL 508 non-fused rotary disconnect switches —16, 25, 40, 63 and 80 A

For a complete assembly, select:

Select for standard application

Switch

Amps	Poles	SCCR @600V (kA)	Max. Class J fuse amps	Max horsepower rating, 3-Phase 208	220/240	440/480	600	Conductor AWG size/ type	Catalog no.
16	3	65	30	3	5	10	10	14-10 Sol, Dual 12 Sol, 14-4 Str, Dual 14-12 Str, 75°C Cu	RD16-3-508
25				7.5	7.5	15	20		RD25-3-508
40		10	60	7.5	7.5	20	25		RD40-3-508
		65	30						
63		50	100	15	20	40	40	14-10 Sol, Dual 12 Sol, 14-1 Str, Dual 10-6 Str, 75°C Cu	RD63-3-508
		65	60						
80		50	100	15	20	40	40		RD80-3-508
		65	60						

PLUS

Handles

Direct mount handle - mounts directly to switch, no shaft required

For switch cat. no.	Color	Test function	Padlockable	Catalog no.
All switches	Black	N	Y - On Switch	DIR-01

OR

External front or right side operated selector handles - shaft required

NEMA type	Color	Handle length	Test function	Padlockable	Catalog no.
1, 3R, 4, 4X, 12	Black	Short	N	Y	H4X-01B (1)
	Red/yellow				H4X-01R (1)
	Black	Long			H4X-02B (2)
	Red/yellow				H4X-02R (2)

Or

External front operated pistol handles - shaft required

NEMA type	Color	Handle length	Test function	Padlockable	Defeatable	Catalog no.
1, 3R, 4, 4X, 12	Black	—	N	Y	Y	H4X-03B
	Red/yellow					H4X-03R

Metallic hasp (heavy duty) external front operated pistol handles - shaft required

NEMA type	Color	Handle length	Test function	Padlockable	Defeatable	Catalog no.
1, 3R, 4, 4X, 12	Black	—	N	Y	Y	H4X-03BHD
	Red/yellow					H4X-03RHD

+

Shafts for selector handles

Length — in (mm)	Mounting depth (X) - in (mm)	Catalog no.
5.9 (150)	3.50~7.60 (89~193)	SH4-150 (1)
7.9 (200)	3.50~9.50 (89~241)	SH4-200 (1)
12.6 (320)	3.50~14.9 (89~378)	SH4-320 (1)

Shafts for pistol handles

Length — in (mm)	Mounting depth (X) - in (mm)	Catalog no.
7.9 (200)	3.30~7.40 (84~188)	SH3-200 (2)
12.6 (320)	3.30~9.30 (84~236)	SH3-320 (2)
15.7 (400)	3.30~14.7 (84~373)	SH3-400 (2)

+

Shaft guides for selector and pistol handles

Handle type		Catalog no.
Selector	Required for 12.6" (320mm) long shafts, optional for other lengths	SH-GUIDE1
Pistol	Required for 15.7" (400mm) long shafts, optional for other lengths	SH-GUIDE2

+

Door mount kit

For mounting switch on the right side of the enclosure or directly on the enclosure door using switch side operation shaft location. Kit includes a shaft. Order switch and selector handle separately.

Switch	Catalog no.
All switches - kit includes shaft	DOOR-508

AND...

Disconnect switches

Accessories

Aux. Contacts

Auxiliary contacts

Contact type	No. of contacts	Continuous amp rating	Voltage (Vac) rating	Max number of units per switch	Catalog no.
NO + NC	1 Ea.	10	240	2 (1 per side/4 contacts total)	BAC01
NO	2				BAC02

AND...

Shrouds

Terminal shrouds - includes terminal shroud for both lineside and loadside

Switch amps	Poles	Location on switch	Catalog no.
16-40	1 (for switched 4th pole)	Lineside and loadside	TSH1-1TB
16-40	3		TSH1-3TB
63-80			TSH2-3TB

AND...

4th pole

Switched 4th pole - converts 3-pole switch to 4-pole switch

Switch amps	Catalog no.
16	POLE-16
25	POLE-25
40	POLE-40

AND...

Gnd./neut. mods

Ground and Neutral Modules - provides unswitched ground or neutral pole - conforms to IEC 60947-3

Switch amps	Module Type	Catalog no.
16-40	Ground	GND-16-40
63-80		GND-63-80
16-40	Neutral	NTRL-16-40
63-80		NTRL-63-80

AND...

6 pole kit

Order switches separately

6-pole conversion kit - creates a 6-pole switch by ganging two 3-pole switches of equal rating

Switch amps	Catalog no.
All switches	KIT-6POLE*

* Kit ships with a direct handle. If external handle is needed order a selector handle and shaft for the UL 508 Rotary Disconnect Switches.

Note: To create an 8-pole switch from 16 to 40 amp switches, use two 3-pole switches of equal ratings plus two switched 4th poles (part # POLE-_).

Auxiliary contact configurations

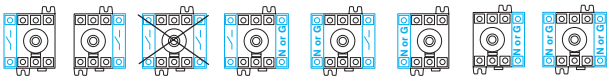

Ground and neutral module, and switched 4th pole configurations.

Dimensions — in (mm)

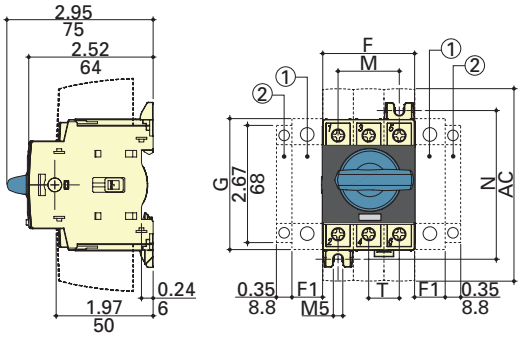

Direct handle operation

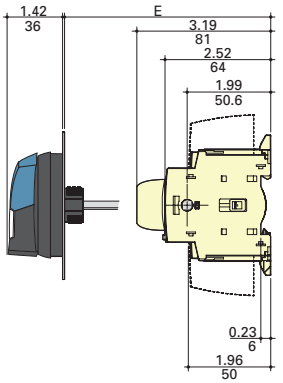

External front operation

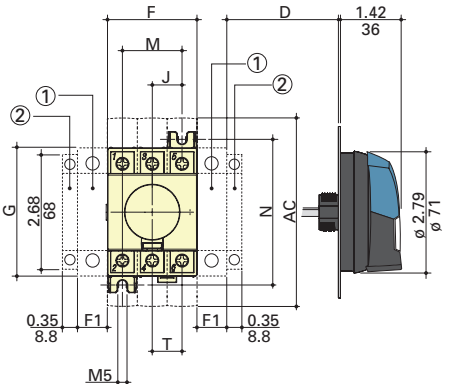

External side operation

1. Position for 1 switched 4th pole (1 per device max.), or ground or neutral module (2 per device max.) or 1 auxiliary contact.
2. Position for 1 auxiliary contact only.

Note: Maximum of 4 Auxiliary contacts, or 3 Auxiliary contacts + one ground or neutral module, or one switched 4th pole.

Switch amps	Overall dimensions				Terminal shroud AC	Switch body			Switch mounting			Connection T
	D min	D max	E min	E max		F	F1	G	J	M	N	
16 to 40	1.18 (30)	9.25 (235)	3.94 (100)	14.64 (372)	4.33 (110)	1.77 (45)	0.59 (15)	2.67 (68)	0.59 (15)	1.18 (30)	2.95 (75)	0.59 (15)
63 to 80	1.18 (30)	9.25 (235)	3.93 (100)	14.64 (372)	4.33 (110)	2.06 (53)	0.69 (18)	2.99 (76)	0.69 (18)	1.38 (35)	3.35 (85)	0.69 (18)

Dimensions — in (mm)

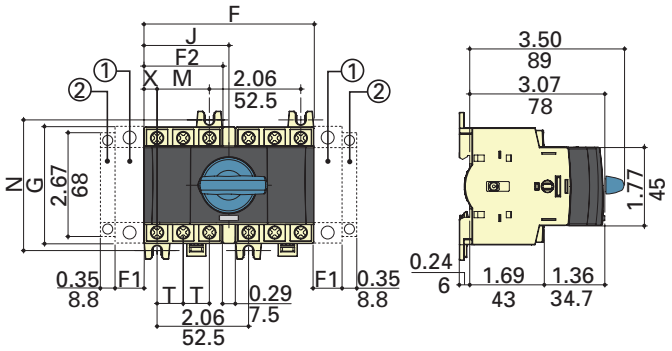

Direct front operation for 6/8-pole disconnects

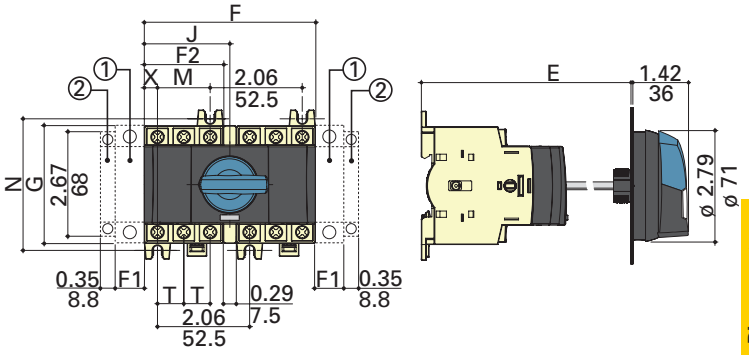

External front operation for 6/8-pole disconnects

1. Position for 1 switched 4th pole (1 per device max.) or 1 auxiliary contact.
2. Position for 1 auxiliary contact only.
Note: Maximum of 4 auxiliary contacts, or 3 auxiliary contacts + one switched 4th pole.

Switch amps	Overall dimensions				Switch body			Switch mounting		Connection	
	E min	E max	F	F1	F2	G	J	M	N	T	X
16 to 40	4.13 (105)	14.64 (372)	3.83 (98)	0.59 (15)	1.77 (45)	2.67 (68)	1.92 (48.75)	1.18 (30)	2.95 (75)	0.59 (15)	0.29 (8)
63 to 80	4.13 (105)	14.65 (372)	4.13 (105)	0.69 (18)	2.06 (53)	2.99 (76)	2.06 (52.5)	1.38 (35)	3.35 (85)	0.69 (18)	0.34 (9)

External selector and pistol handles

Handle type

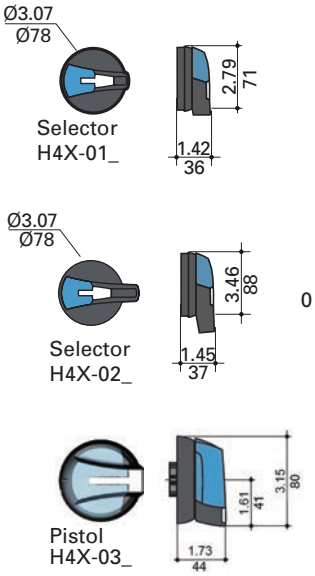

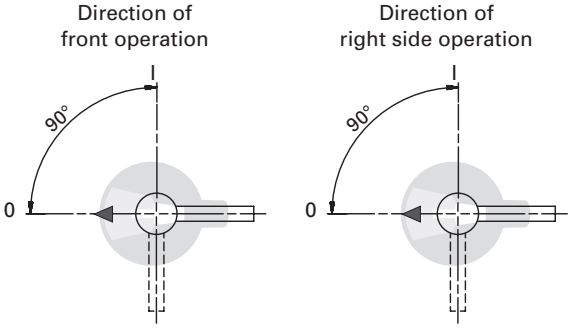

Door drilling layouts

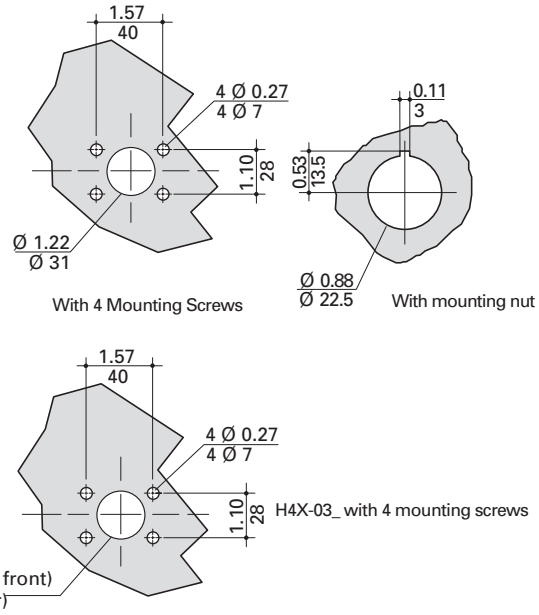

UL 98 and UL 508 enclosed disconnect switches

Enclosed fused and non-fused rotary disconnect switches from 16 to 1200 A in NEMA 1, 3R, 4, 4X, 12 enclosures.

Ratings

RoHS 2011/65/EU

- Volts
  - 600 Vac
  - 250-600 Vdc*
- Amps 16-1200 A
- SCCR
  - UL 98 25-200 kA
  - UL 508 10-65 kA

* Some non-fused disconnect switches are not rated for DC applications.

Agency information

- UL 98 Listed, Guide WIAX, WIAX7, File E182262
- UL 508 Listed, Guide NLRV, NLRV, File E155129
- cULus Listed to Canadian Standard 22.2, No. 14
- cULus Listed to Canadian Standard 22.2, No. 4
- Conforms with IEC 60947-3
- RoHS compliant
- CE

Operating temperature

- -20°C to 70°C

4X plastic enclosure flammability ratings

- Polycarbonate UL 94-5V A-0
- Fiberglass UL 94-5V

Field installed accessories

- Auxiliary contacts
- Terminal shrouds
- Switched 4th pole (UL 508 only)

Online resources

Visit Eaton.com/bussmannseries for:

- CAD drawings
- Instruction sheets
- UL information

Features

- UL 98 Listed for general purpose, main disconnect, or branch circuit protection up to 600 Vac/dc
- UL 508 Listed for motor disconnect applications up to 600 Vac
- Multiple field installed accessories enhance the enclosed disconnect switches to fit the desired application
- Lockout/tagout: Up to three 1/4" shank padlocks can be installed on external handles

NEMA 1, 3R, 4 and 12

NEMA 4X 304 stainless steel

NEMA 4X polycarbonate or fiberglass

UL 98 enclosed fused disconnects — 30 to 800 A

3-pole UL 98 600 Vac

Catalog number system:

ER 4X - 60 J 3 P B

ER

Enclosed Rotary disconnect

NEMA rating

1, 3R, 4, 4X (304 SST), 4P (4X Plastic), 12

Amp rating

30, 60, 100, 200, 400, 600, 800

Fuse class

J = Class J, L = Class L

Number of poles

3 = 3-pole

Handle type

P = Pistol

Handle color

B = Black, R = Red

NEMA 1, 3R, 4 and 12

NEMA 4X
304 stainless steel

NEMA 4X

30-800A UL 98 fused switches

Available Bussmann series fuses

Fuse class	Catalog symbol/type
J	LPJ time-delay, current limiting
	JKS fast-acting fuses
	DFJ high speed drive fuse
L	KRP-C time-delay, current limiting
	KTU fast-acting
	KLU time-delay
	KRP-CL (225-600 A)

Catalog numbers

All catalog numbers provided with integral or installed lugs and a black selector handle. Order Red/yellow handle by changing the suffix "B" to "R."

		NEMA enclosure type and catalog no.					
Switch amps	Fuse class	1	3R	4	4X plastic[1]	4X 304 stainless	12
30	J	ER1-30J3PB	ER3R-30J3PB	ER4-30J3PB	ER4P-30J3PB	ER4X-30J3PB	ER12-30J3PB
60		ER1-60J3PB	ER3R-60J3PB	ER4-60J3PB	ER4P-60J3PB	ER4X-60J3PB	ER12-60J3PB
100		ER1-100J3PB	ER3R-100J3PB	ER4-100J3PB	ER4P-100J3PB	ER4X-100J3PB	ER12-100J3PB
200		ER1-200J3PB	ER3R-200J3PB	ER4-200J3PB	ER4P-200J3PB	ER4X-200J3PB	ER12-200J3PB
400		ER1-400J3PB	ER3R-400J3PB	ER4-400J3PB	ER4P-400J3PB	ER4X-400J3PB	ER12-400J3PB
600		ER1-600J3PB	ER3R-600J3PB	ER4-600J3PB	ER4P-600J3PB	ER4X-600J3PB	ER12-600J3PB
800	L	ER1-800L3PB	ER3R-800L3PB	ER4-800L3PB	ER4P-800L3PB	ER4X-800L3PB	ER12-800L3PB

1 Enclosures ≤100 A are polycarbonate, flammability rating UL 94-5V A-V0, ≥200 A are fiberglass, flammability rating UL 94-5V.

Switch ratings

For wire types, ranges and terminal torques, see table on page 11-55.

				Voltage			
Switch amps	Switch cat. no.	Fuse class	Poles	Vac	Vdc	SCCR @ Vac (kA)	Max. Hp @ 600 Vac
30	RDF30J-3	J	3	600	250	200	20
60	RDF60J-3						50
100	RDF100J-3						75
200	RDF200J-3				N/A		150
400	RDF400J-3				250		350
600	RDF600J-3				600		500
800	RDF800L-3	L					

UL 98 enclosed fused disconnects — 30 to 800 A

Enclosure weights and dimensions

Catalog no. family	Amps	Fuse class	NEMA enclosure	H x W x D (in)	Mounting centers h x w (in) A	B	C	Weight (lbs)
ER_-30J	30	J	1, 3R, 4, 12	10x10x6	8.3x8.3	—	—	15
			4X-SST		—	10.7x8.3	8.3x10.7	
			4X-plastic [1]	12x10x6	—	12x5.6	7.6x10	8
ER_-60J	60		1, 3R, 4, 12		10.3x8.3	—	—	19
			4X-SST		—	12.7x8.3	8.3x10.7	
			4X-plastic [1]	13x13x6	—	14x7.6	9.6x12	11
ER_-100J	100		1, 3R, 4, 12	14x12x6	12.3x10.3	—	—	21
			4X-SST		—	14.7x10.3	12.3x12.7	
			4X-plastic [1]	13x13x6	—	14x7.6	9.6x12	12
ER_-200J	200		1, 3R, 4, 12	24x20x8	22.3x18.3	—	—	55
			4X-SST		—	24.7x18.3	22.3x20.7	
			4X-plastic [1]	27x21x10	—	25.75x14	—	39
ER_-400J	400		1, 3R, 4, 12	48x36x12	46.3x34.3	—	—	188
			4X-SST		—	48.7x34.3	46.3x36.7	
			4X-plastic [1]	51x37x14	—	50x28.5	—	186
ER_-600J	600		1, 3R, 4, 12	48x36x12	46.3x34.3	—	—	216
			4X-SST		—	48.7x34.3	46.3x36.7	
			4X-plastic [1]	51x37x14	—	50x28.5	—	214
ER_-800L	800	L	1, 3R, 4, 12	48x36x12	46.3x34.3	—	—	216
			4X-SST		—	48.7x34.3	46.3x36.7	
			4X-plastic [1]	51x37x14	—	50x28.5	—	214

1 Enclosures ≤100 A are polycarbonate, flammability rating UL 94-5V A-V0, ≥200 A are fiberglass, flammability rating UL 94-5V.

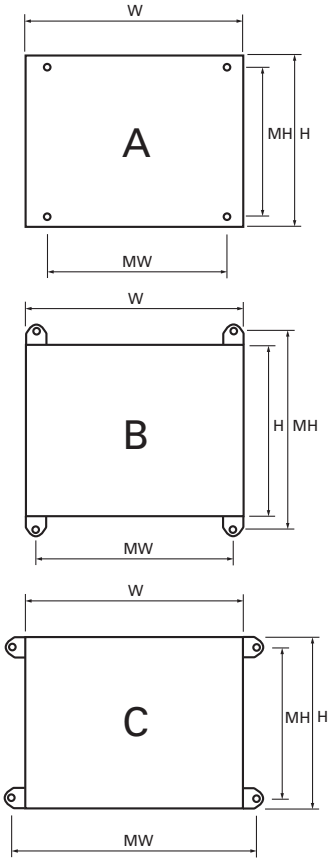

Available field-Installed accessories - order separately

Auxiliary contacts - for 30 to 800 amp switches

Contact type	No. of contacts	Cont. amp rating	Vac	Max. units per switch	Catalog no.
NO	1	10	600	4 (30 to 200 A)	BAC05
NC				8 (400 to 800 A)	BAC06

Terminal shrouds

For 200 to 800 amp switches - includes terminal shroud for lineside or loadside

Switch amps	Poles	Catalog no.
200	3	TSH8-3TB
400		TSH9-3TB
600-800		TSH10-3TB

UL 98 enclosed non-fused disconnects — 30 to 1200 A

3-pole UL 98 600 Vac

Catalog number system:

ER 4X - 60 N 3 P B

ER

Enclosed Rotary disconnect

NEMA rating

1, 3R, 4, 4X (304 SST), 4P (4X Plastic), 12

Amp rating

30, 60, 100, 200, 400, 600, 800, 1200

N = non-fused

Number of poles

3 = 3-pole

Handle type

P = Pistol

Handle color

B = Black, R = Red

NEMA 1, 3R, 4 and 12

NEMA 4X
304 stainless steel

NEMA 4X

200-1200A UL 98 non-fused switches

NEMA 1, 3R, 4 and 12

NEMA 4X
304 stainless steel

NEMA 4X

30-800A UL 98 non-fused switches

Catalog numbers

All Catalog numbers provided with integral or installed lugs and a black selector handle. Order Red/yellow handle by changing the suffix "B" to "R."

Amps	NEMA enclosure type and catalog no.					
	1	3R	4	4X plastic [1]	4X 304 stainless	12
30	ER1-30N3PB	ER3R-30N3PB	ER4-30N3PB	ER4P-30N3PB	ER4X-30N3PB	ER12-30N3PB
60	ER1-60N3PB	ER3R-60N3PB	ER4-60N3PB	ER4P-60N3PB	ER4X-60N3PB	ER12-60N3PB
100	ER1-100N3PB	ER3R-100N3PB	ER4-100N3PB	ER4P-100N3PB	ER4X-100N3PB	ER12-100N3PB
200	ER1-200N3PB	ER3R-200N3PB	ER4-200N3PB	ER4P-200N3PB	ER4X-200N3PB	ER12-200N3PB
400	ER1-400N3PB	ER3R-400N3PB	ER4-400N3PB	ER4P-400N3PB	ER4X-400N3PB	ER12-400N3PB
600	ER1-600N3PB	ER3R-600N3PB	ER4-600N3PB	ER4P-600N3PB	ER4X-600N3PB	ER12-600N3PB
800	ER1-800N3PB	ER3R-800N3PB	ER4-800N3PB	ER4P-800N3PB	ER4X-800N3PB	ER12-800N3PB
1200	ER1-1200N3PB	ER3R-1200N3PB	ER4-1200N3PB	N/ A	ER4X-1200N3PB	ER12-1200N3PB

1 Enclosures ≤100 A are polycarbonate, flammability rating UL 94-5V A-V0, ≥200 A are fiberglass, flammability rating UL 94-5V.

Switch ratings

For wire types, ranges and terminal torques, see table on page 11-72.

Amps	Switch catalog no.	Poles	Vac	SCCR (kA)	Max. Hp @ 600 Vac
30	RD30-3	3	600	100	25
60	RD60-3				50
100	RD100-3			25/100*	
200	RD200-3			200	200
400	RD400-3				350
600	RD600-3				
800	RD800-3			100	500
1200	RD1200-3				

* 25 kA @ 600 Vac, 100 kA @ 480 Vac.

UL 98 enclosed non-fused disconnects — 30 to 1200 A

Enclosure weights and dimensions

Catalog no. family	Amps	NEMA enclosure	H x W x D (in)	Mounting centers h x w (in) A	B	C	Weight (lbs)
ER_-30	30	1, 3R, 4, 12	10x8x6	8.3x6.3	—	—	11
		4X-SST		—	10.7x6.3	8.3x8.7	11
		4X-plastic (1)	9x9x6	—	10x3.6	5.6x8	5
ER_-60	60	1, 3R, 4, 12	10x8x6	8.3x6.3	—	—	12
		4X-SST		—	10.7x6.3	8.3x8.7	12
		4X-plastic (1)	9x9x6	—	10x3.6	5.6x8	5
ER_-100	100	1, 3R, 4, 12	12x10x6	10.3x8.3	—	—	12
		4X-SST		—	12.7x8.3	8.3x10.7	12
		4X-plastic (1)	13x13x6	—	14x7.6	9.6x12	8
ER_-200	200	1, 3R, 4, 12	20x16x8	18.3x14.3	—	—	39
		4X-SST		—	20.7x14.3	18.3x16.7	39
		4X-plastic (1)	20x17x12	—	21.5x10.1		31
ER_-400	400	1, 3R, 4, 12	36x30x8	34.3x28.3	—	—	122
		4X-SST		—	36.7x28.3	34.3x30.7	122
		4X-plastic (1)	37x32x14	—	38x28.9	—	103
ER_-600	600	1, 3R, 4, 12	48x36x12	46.3x34.3	—	—	209
		4X-SST		—	48.7x34.3	46.3x36.7	209
		4X-plastic (1)	51x37x 14	—	50x28.5	—	187
ER_-800	800	1, 3R, 4, 12	48x36x12	46.3x34.3	—	—	211
		4X-SST		—	48.7x34.3	46.3x36.7	211
		4X-plastic (1)	51x37x 14	—	50x28.5	—	189
ER_-1200	1200	1, 3R, 4, 12	60x36x16	58.3x34.3	—	—	268
		4X-SST	60x36x16	—	60.7x34.3	58.3x36.7	268

1 Enclosures ≤100 A are polycarbonate, flammability rating UL 94-5V A-V0, ≥200 A are fiberglass, flammability rating UL 94-5V.

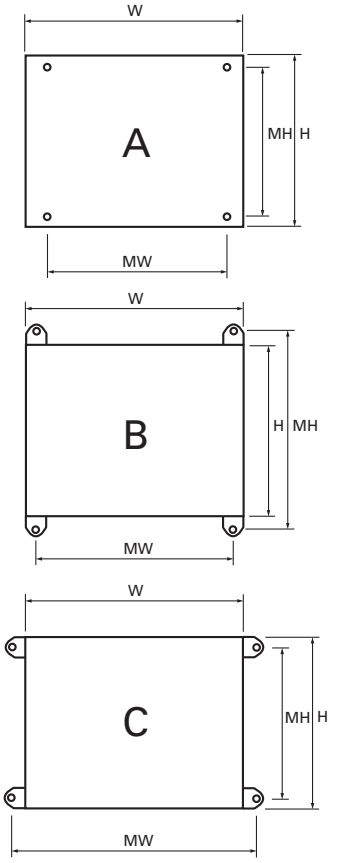

Available field-installed accessories - order separately

Auxiliary contacts for 30 to 1200 amp switches.

Switch amps	Contact type	No. of contacts	Cont. amp rating	Vac	Max. units per switch	Catalog no.
30-100	NO + NC	1 of each	10	240	4	BAC01*
	NO	2				BAC02*
200-1200	NO + NC	1 of each	10.1	125-250	2	BAC03**
	NO + NC	1 of each				BAC04**
	NO + NC	1 of each	1	125		BAC11**
	NO + NC	1 of each				BAC12**

* Two (2) Units per switch max.
**For one auxiliary contact, install either BAC03 or BAC11. For two auxiliary contacts, install BAC03 + BAC04, or BAC11 + BAC12.

Terminal shrouds for 200 to 800 amp switches

Switch amps	Poles	Location on switch	Catalog no.
30-100	3	Lineside and loadside	TSH3-3TB
200		Lineside	TSH4-3T
		Loadside	TSH4-3B
400		Lineside	TSH5-3T
		Loadside	TSH5-3B
600		Lineside or loadside	TSH6-3TB
800-1200			TSH7-3TB

UL 508 enclosed non-fused disconnect — 16 to 80 A

3-/6-pole UL 508 600 Vac

Catalog number system:

ER 4X - 63 N 6 P B

ER

Enclosed Rotary disconnect

NEMA rating

1, 3R, 4, 4X (304 SST), 4P (4X Plastic), 12

Amp rating

16, 25, 40, 63, 80

N = non-fused

Number of poles

3 = 3-pole, 6 = 6-pole

Handle type

S = Selector*, P = Pistol**

Handle color

B = Black, R = Red

* 6-Pole switches only, selector handle does not interlock the enclosure door.
**3-pole switches only.

NEMA 1, 3R, 4 and 12

NEMA 4X
304 stainless steel

NEMA 4X

16-80 A UL 508 non-fused switches

Catalog numbers

All catalog numbers provided with a black selector handle. Order red/yellow handle by changing the suffix "B" to "R."

Amps	Poles	NEMA enclosure and catalog no.					
		1	3R	4	4X plastic [1]	4X 304 stainless	12
16	3	ER1-16N3PB	ER3R-16N3PB	ER4-16N3PB	ER4P-16N3PB	ER4X-16N3PB	ER12-16N3PB
	6	ER1-16N6SB	ER3R-16N6SB	ER4-16N6SB	ER4P-16N6SB	ER4X-16N6SB	ER12-16N6SB
25	3	ER1-25N3PB	ER3R-25N3PB	ER4-25N3PB	ER4P-25N3PB	ER4X-25N3PB	ER12-25N3PB
	6	ER1-25N6SB	ER3R-25N6SB	ER4-25N6SB	ER4P-25N6SB	ER4X-25N6SB	ER12-25N6SB
40	3	ER1-40N3PB	ER3R-40N3PB	ER4-40N3PB	ER4P-40N3PB	ER4X-40N3PB	ER12-40N3PB
	6	ER1-40N6SB	ER3R-40N6SB	ER4-40N6SB	ER4P-40N6SB	ER4X-40N6SB	ER12-40N6SB
63	3	ER1-63N3PB	ER3R-63N3PB	ER4-63N3PB	ER4P-63N3PB	ER4X-63N3PB	ER12-63N3PB
	6	ER1-63N6SB	ER3R-63N6SB	ER4-63N6SB	ER4P-63N6SB	ER4X-63N6SB	ER12-63N6SB
80	3	ER1-80N3PB	ER3R-80N3PB	ER4-80N3PB	ER4P-80N3PB	ER4X-80N3PB	ER12-80N3PB
	6	ER1-80N6SB	ER3R-80N6SB	ER4-80N6SB	ER4P-80N6SB	ER4X-80N6SB	ER12-80N6SB

1 Polycarbonate enclosure flammability rating UL 94-5V A-V0.

Switch ratings

For wire types, ranges and terminal torques, see table on page 11-80.

Amps	Switch catalog no.	Vac	SCCR with max upstream Class J fuse	Max. Hp @ 600 V
16	RD16-3-508	600	65 kA /30 A	10
25	RD25-3-508			20
40	RD40-3-508		65 kA /30 A — 10 kA / 60 A	25
63	RD63-3-508		65 kA /60 A — 50 kA / 100 A	40
80	RD80-3-508		50 kA / 100 A	40

Note: Voltage, SCCR and horsepower ratings are the same for 3- and 6-pole switches.

UL 508 enclosed non-fused disconnect — 16 to 80 A

Enclosure weights and dimensions

NEMA enclosure	Poles	Switch amps	H x W x D (in)	Mounting centers h x w (in) A	B	C	Weight (lbs)
1, 3R, 4, 12	3	16-80	8x6x6	6.3x4.3	—	—	8
	6		10x8x6	8.3x6.3	—	—	11
4X-304 SST	3		8x6x6	—	8.7x4.3	6.3x6.7	8
	6		10x8x6	—	10.7x6.3	8.3x8.7	11
4X-plastic [1]	3	16-63	7.4x8.7x5.8	—	8x3.6	3.6x8	4
		80	9.4x8.7x5.9	—	10x3.6	5.6x8	5
	6	16-8 A	11.4x10.7x6.3	—	12x5.6	7.6x10	6

1 Polycarbonate.

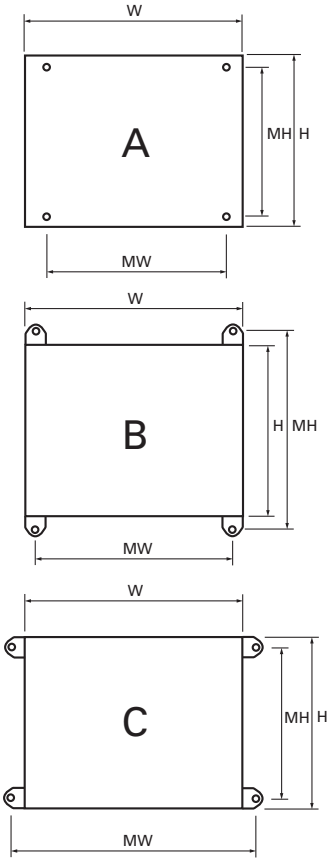

Available field-installed accessories - order separately

Auxiliary contacts

Contact type	No. of contacts	Cont. amp rating	Vac	Max. units per switch	Catalog no.
NO + NC	1 Ea.	10	240	2 (1 per side, 4 contacts total)	BAC01
NO	2				BAC02

Auxiliary contact configurations

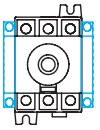

Terminal shrouds

Includes terminal shroud for both lineside and loadside.

Switch amps	Poles	Location on switch	Catalog no.
16-40	3	Lineside and loadside	TSH1-3TB
63-80			TSH2-3TB

Switched 4th pole

Converts 3-pole switch to 4-pole switch.

Switch amps	Catalog no.
16	POLE-16
25	POLE-25
40	POLE-40

Bussmann series Quik-Spec™ Coordination Panelboard

Up to 200 kA SCCR in 40% less space than traditional solutions

Plus, the easiest way to achieve selective coordination

Contents

Description	Section page
Quik-Spec™ Coordination Panelboards	
QSCP Up to 400 A	2
QSCP 600 to 1200 A	3
Quik-Spec elevator disconnects	
Power Module™ switches and panels	4-5
HVAC disconnects	
Fused, non-fused, GFCI	6

30-400A Quik-Spec™ Coordination Panelboard (QSCP)

Configurable 600 Vac fused panelboard with from 30 to 400 amp mains, 15 to 100 amp 1-, 2- and 3-pole branch switches and 18, 30 or 42 branch circuit positions. Finger-safe fused branch circuit switches use the time-delay or fast-acting CUBEFuse available in ratings from 1 to 100 amps.

Ratings

- Volts
  - Up to 600 Vac
  - Up to 125 Vdc *
- Amps 30, 60, 100, 200, 225 or 400 A
- SCCR
  - 200 kA, 100 kA or 50 kA AC
  - 100 kA or 20 kA@125 Vdc*

* Vdc rating applicable to MLO panels only. 50 and 60 amp switches are rated 125 Vdc for installed fuse amp ratings up to 40 A and 24 Vdc for installed fuse amp ratings from 45 to 60 A. 90 and 100 amp switches are rated 125 Vdc for installed fuse amp ratings up to 80 A and 24 Vdc for installed fuse amp ratings from 90 to 100 A.

Agency information

- UL Listed to UL 67
- Complies with NFPA 70

Mains

- MLO (main lug only)
- Fused disconnect
- Non-fused disconnect

Enclosure**

- NEMA 1 (top or bottom feed)
- NEMA 3R (bottom feed only)
- Consult factory for other ratings

** Standard size 20" W x 5" D x various heights, depending on configuration. Flush mount and door-in-door not available with NEMA 3R enclosure.

Mounting

- Surface – NEMA 1 and 3R
- Flush – NEMA 1 only

Doors

- Single - NEMA 1 and 3R
- Door-in-Door – NEMA 1 only

Branch positions

- 18, 30 and 42 (factory configured)

Branch switches

- 1-, 2- and 3-pole amp rating rejecting CCP2B fused switches† (field installable)
- Amp rejection breaks 15, 20, 30, 40, 50, 60, 70, 90, 100 A

† CCP2Bs will not accept a fuse with a greater amp rating than the switch.

CCP2B 3-pole branch switch features lockout provision for 1/4" lock

Loadside lugs and disconnect

- Feed-through single and double
- Fused loadside disconnect, ≥100 to ≤200 amp (400 amp panels only)

Neutrals

- 200, 400 and 800 A unbonded and bonded

Ground

- Non-isolated or isolated

Features

- UL Listed and cULus to Canadian Standard 22.2, No. 29-M1989 make it easy to address NEC and CEC selective coordination requirements in an all fused system or upstream Eaton circuit breakers
- Value-engineered for greater flexibility with up to 400 amp mains, 200 kA SCCR, 100 A branches with 18, 30 and 42 branch positions
- Same size footprint as traditional circuit breaker panelboards and 40% smaller than standard fusible panelboards: 20" W x 5-3/4" D x various heights (depending on configuration)
- Increased safety with the current-limiting finger-safe Class CF CUBEFuse that helps reduce arc flash hazard levels

Optional surge protection

2017 NEC 700.8 requires a listed SPD to be installed in or on all emergency system panelboards.

Any QSCP intended for installation on an AC circuit can be ordered with an Surge Protective Device to comply with NEC 700.8.

The installed SPDs feature a remote Form C contact relay (rated at 250 Vac/0.5 A) for easy integration into a monitoring system.

Ordering

The QSCP is factory configured to the specific electrical system. To place your order, contact your Bussmann series product distributor or representative and provide the relevant electrical and circuit information for your installation.

Data sheet no. 1160

600-1200A Quik-Spec Coordination Panelboard (QSCP)

Configurable fused panelboard with 600, 800 and 1200 amp MLO mains and branch switches up to 600 amps.

Ratings

- Volts
  - Up to 600 Vac
  - Up to 125 Vdc
- Amps 600, 800, 1200 A
- SCCR 200 kA

Agency information

- UL Listed to UL 67
- Complies with NFPA 70

Assembly

- Main lug only
- Floor mount NEMA 1 enclosure
- Branch switches 1-, 2- and 3-pole, 15 to 600 A

Available branch switch fuses

- Fast-acting or time-delay Class J (time-delay LPJ or fast-acting JKS) non-CCP2B disconnects only
- High speed DFJ Class J fuses (non-CCPB disconnects only)
- Fast-acting or time-delay Class CF (time-delay TCF or fast-acting FCF) CCP2B disconnects only

Features

- Configurable panelboards with options for 600, 800 and 1200 A MLO mains and branches from 15-600 A all rated 200 kA SCCR at 600 Vac
- The CCP2B finger-safe branch switches (utilizing the UL Class CF CUBEFuse up to 100 A) features amp rating rejection to help prevent overfusing
- Fused switches make it simple to address NEC selective coordination system requirements in an all fused system or qwith upstream Eaton circuit breakers.

Ordering

The QSCP is factory configured to the specific electrical system. To place your order, contact your Bussmann series product distributor or representative and provide the relevant electrical and circuit information for your installation.

Configuration and dimensions — in

Panel amps	Branch configurations	H	W	D
600	(18) 1-100 A	65	27	15
	(18) 1-100 A + 200 A single			
	(18) 1-100 A + 200 A twin			
	200 A single + 200 A single			
	200 A single + 200 A twin			
	200 A twin + 200 A twin			
	(2) 300 A single	89	38	15
800	(18) 1-100 A + 200 A single	65	38	15
	(18) 1-100 A + 200 A twin			
	(2) 200 A twin			
	(18) 1-100 A + 400 A single	89	38	15
	200 A twin + 400 A single			
	(2) 400 A single			
1200	(18) 1-100 A + 600 A single	89	38	15
	(3) 200 A twin			
	200 A twin + 600 A single			
	(2) 200 A twin + 400 A single			
	(3) 400 A single	102	38	15
	600 A single + 400 A single + 200 A single			
	600 A single + 400 A single + 200 A twin			
	(2) 600 A single			

Quik-Spec Power Module switch and panel all-in-one elevator disconnects

Fused power switch (PS) or panel (PMP) with shunt trip and fire safety interface provide a single point tie in with fire alarm systems.

Ratings

- Volts 600 Vac, 3Ø
- Amps*
  - 30-400 A (PS)
  - 30-200 A (PMP feeder switches)
  - 400-800 A (PMP main switches)
- SCCR 200 kA RMS

* Contact your Bussmann series product representative for applications greater than 800 amps.

Agency information

- Power Module switch (**PS**) — UL Listed (UL 98) enclosed and dead front switch Guide 96NK3917, File E182262, NEMA 1, UL 50 Listed enclosure**, cUL per Canadian Standards C22.2, No. 0-M91-CAN/CSA C22.2, No. 4-M89 Enclosed switch.
- Power Module Panel (**PMP**) — UL 98 enclosed and deadfront switches, complies with NFPA 70

**NEMA 12, 3R, and 4 enclosures also available.

Elevator shutdown

- ANSI/ASME A17.1, 2.8.3.3.2
- NEC 620.51(B) (elevator shutdown)
- NEC 240.12 (orderly shutdown)
- Shunt trip voltage monitoring
- NFPA 72, 6.16.4.4

Selective coordination

- NEC 620.62

Auxiliary contact (hydraulic elevator)

- NEC 620.91(C)

Features

- Internally powered, relay activated shunt trip system
- Mechanically interlocked auxiliary contact
- Self-contained adherence to elevator consensus standards, NFPA 70, NFPA 72, ANSI/ASME A17.1
- Shunt trip capability
- Fire safety signal interface
- Shunt trip voltage monitoring
- Component protection with Low-Peak™ Class J fuses
- Lockable in the open position with three-lock capability
- Optional key-test switch and optional pilot light for easy inspection
- No annual calibration or testing of overcurrent protection required
- Padlockable for service-work safety and open-door "override" for troubleshooting

PS† Power Module Switch for single elevator applications.

PMP† Power Module Panel for multiple elevator applications.

† Fused main disconnect requires Class J fuses, not supplied with switch.

Typical applications

- Elevator disconnects
- Computer room shunt trip disconnect
- Fire safety interface relay

Accessories

- For added safety, use the Bussmann series SAMI™ fuse covers to improve maintenance personnel protection (OSHA 1910.333, Paragraph C)

Ordering

- The Quik-Spec Power Module Switch and Panel are factory configured. To place your order, have all relevant electrical and circuit information contact your Bussmann series product representative.

Data sheet no. 1145 (switch) 1146 (panel)

Hydraulic elevators

Hydraulic elevators need battery backup to help prevent stranding passengers. To keep the elevator from moving when it's been manually shut down for maintenance, the NEC requires battery backup be connected to the elevator disconnecting means through an auxiliary contact.

However, an unintended consequence can be passengers getting stranded because of devices that open automatically (circuit breakers and disconnects utilizing a molded case switch with a trailing fuse block) will operate with a fault on their loadside. That operation also disables the battery backup and strands passengers. That's why the Power Module has a non-automatic fusible shunt trip switch. If the Power Module has a fault on its loadside, the fuses open and the battery stays enabled. Thus the Power Module ensures that battery power is enabled when the passengers need it to exit - and disabled to allow safe maintenance of the elevator and hoistway.

Scenario	Battery lowering required	Reason	Offered by Power Module	Offered by other elevator discon-nects
Power failure	Yes	Need to lower elevator and allow passengers to exit.	Yes	Yes
Fire in shaft or machine room	No	Recall is initiated by smoke detector and lowers elevator to a safe floor. Battery not needed.	Yes	Yes
Disconnect manually opened	No	Worker to perform maintenance. Elevator must remain stationary to prevent injury.	Yes	Yes
Fault on loadside of disconnect	Yes	Need to lower elevator and allow passengers to exit.	Yes	No

QuikShip service program, 3 days for switches and 10 days for panels!

Ship-direct service within three business days for Power Module switches (PS_) and 10 business days for Power Module panels (PMP_).

Power Module switch*		
Catalog no.	**Amps**	**Volts**
PS6T48R1KGBF3-X	60	480
PS1T48R1KGBF3-X	100	480
PS1T20R1KGBF3-X	100	208
PS2T48R1KGBF3-X	200	480
PS2T20R1KGBF3-X	200	208

Power Module panel**	
Catalog no.	**Amps**
PMP-400-X	400
PMP-600-X	600
PMP-800-X	800

* Three day PS_ shipment requires ordering from catalog numbers shown, **limit three units or less per order**.
**10 day PMP_ shipment covers NEMA 1 enclosures with the amp ratings shown and all requirements for relay type (AC or DC), accessory options and number of switches. To order PMP_, contact your Bussmann series product representative with all relevant electrical and circuit information.

Power Module Switch catalog number system

To order, use this build-a-code to specify your Power Module switch.

PS 1 T48 R1 K G N1 B F1 U

PS = Power Module Switch

Amp rating†
- 3 = 30, 6 = 60, 1 = 100
  2 = 200, 4 = 400

Control transformer*†
- T20 = 208 V, T24 = 240 V
  T48 = 480 V, T60 = 600 V

Fire safety interface relay (3PDT, 10A, 12V)†
- R1 = 120 Vac coil,
  R2 = 24 Vdc coil

Optional key test switch
- K = Key

Optional pilot light ON
- G = Green, R = Red
  W = White

Optional neutral lug††
- N6 = 30-60 A, N1 = 100 A
  N2 = 200 A, N4 = 400 A

Auxiliary contacts†
- B = 2 NO/NC

Fire alarm voltage monitoring relay (to monitor shunt trip voltage)
- F1 = Single-pole,
  F3 = Three-pole**

Optional NEMA enclosures (Type 1 standard with no suffix designation required)
- U = Type 3R, Y = Type 4,
  Z = Type 12

* 100 Va with primary and secondary fusing (120 V secondary).
**Only for use with R1 option.
† Required equipment.
††Neutral lug rating should be equal to or greater than the switch amp rating.

Data sheet no. 1145 (switch) 1146 (panel)

Fused and non-fused AC disconnects

Fused and non-fused pullout AC disconnects in NEMA 3R enclosures. Fused versions are available in 30 and 60 amp ratings with or without self-testing GFCI receptacles. Non-fused versions are available in 60 amp versions with or without self-testing GFCI receptacles.

Fused disconnect

Non-fused disconnect

Non-fused disconnect with GFCI receptacle

Ratings

- Volts
  - 120 Vac single-phase
  - 240 Vac split-phase
- Amps 30 or 60 A

Agency Information

- UL Listed to UL 1429, cUL Certified, UL Guide WGEW

Conductors

- 3-14 AWG Cu/Al

Enclosure

- Metallic NEMA 3R housing with weather resistant coating

Dimensions

- See catalog numbers table

Features

- AC disconnects meet NEC Code requirements under article 440.14
- Self-testing GFCI units meet NEC Code requirements under articles 210.63, 210.8, and 406.8(B)(1)
- NEMA 3R enclosures withstand outdoor environment
- Padlockable with two-position pullout handle to lock safety shield when in the ON position. (Not available on GFCI or 60 A switched units.) For added safety, pullout handle can be stored in the compartment in the OFF position

Typical applications

- Residential, light industrial/commercial AC and heat pump service
- Spas/whirlpools, swimming pools, pump houses
- Suitable for use as service entrance equipment with field-installed ground bar. Order catalog number DPFG

Catalog no.	Description	Amp rating	Max Hp rating 120 V	Max Hp rating 240 V	Fuse class	Approximate dimensions (in) Height	Width	Depth
Fused disconnects								
B221-30F	Pullout disconnect	30	1.5	3	H or R	8-3/4	5-3/8	2-7/8
B221-30FGFST	Pullout disconnect with GFCI					13	7-1/2	4-3/4
B221-30FGFWTST	Pullout disconnect with weather-resistant/tamper-resistant rated GFCI							
B222-60F	Pullout disconnect	60	3	10	H or R	8-3/4	5-3/8	2-7/8
B222-60FGFST	Pullout disconnect with GFCI					13	7-1/2	4-3/4
B222-60FGFWTST	Pullout disconnect with weather-resistant/tamper-resistant rated GFCI							
Non-fused disconnects								
B222-60NF	Pullout disconnect	60	3	10	*	8-3/4	5-3/8	2-7/8
B222-60NFGFST	Pullout disconnect with GFCI					11-3/4	6-1/2	4-1/2
B222-60NFGFWTST	Pullout disconnect with weather-resistant/tamper-resistant rated GFCI							
B222-60NFNA	Disconnect switch		—			8-3/4	5-3/8	3-5/8

* Upstream overcurrent protective device (OPCD) not to exceed 60 A.

For a 30 and 60 amp pullout replacement handle, order catalog number 96-3258-4.

Recommended Bussmann series fuses

Fuse class	Catalog symbol	Operation	Available amps	Data sheet no.
H	NON-(amp)	One time, general purpose	Up to 60	1030
R	FRN-R-(amp)	Dual element, time-delay	Up to 60	1019
	LPN-RK-(amp)SP (non-indicating)			1003
	LPN-RK-(amp)SPI (indicating		35 to 60	1003

Data sheet no. 1143

Contents

Description	Section page
Selecting Type 1 SPDs	**2-3**
Type 1 SPDs	
SurgePOD PRO Type 1, NEMA 4X	4-5
BSPA, Type 1 and 2, NEMA 4X	6-9
BSPD high capacity Type 1 and 2, NEMA 1 and 4X	10-14
UL DIN-Rail high SCCR Type 1 SPDs	
1-pole, BSPM_S2G	15-16
2-pole, BSPM_S3G	17-18
3-pole, BSPM_WYG/DLG	19-20
4-pole, BSPM_WYNG/HLG	21-22
UL DIN-Rail power and control voltage Type 4 SPDs	
1-pole, Type 4 power BSPM_LV	23-24
2-pole, Type 4 voltage BSPH2A_LV	25-26
UL 497B DIN-Rail data signal SPDs	
RJ45/Ethernet	27
Universal 4 wire	28-29

Selecting a Type 1 SPD

Electrical systems and connections

Step 1: Review the following system diagrams that show the SPD connection points for the Bussmann series SPD models that may be applied.

Step 2: Locate the system diagram that matches your application, note the applicable SPD model numbers and then proceed to the product pages for their details.

Understanding the following will help assure that the correct surge protective device is specified:

- Typical North American electrical systems include single-phase, split-phase, Delta and Wye.
- Selecting the wrong SPD generally arises from misunderstanding the nominal system voltage, ground and neutral connections.
- General convention has it that a "ground" wire is not counted as a wire in the system description (e.g., 3 wire, 4 wire, etc.), but it is counted as a connection point if the SPD has a ground wire.
- Selecting a voltage rating for Wye systems must be based upon its nominal system voltage rating and not on the leg-to-leg voltages.
- Bonded N-G configurations do not require protection at the service entrance transformer, but protection is suggested in downstream bonded N-G systems if the length of conductor making the bond is greater than 10 feet (3m).

BSPD high capacity

BSPA

SurgePOD PRO

Two wire single-phase - 2 connection points

Application: Sub-panel or feeder panel

Volts: 120, 240 (L-N)

Note: Must be installed within 10 feet (3m) of a bonded neutral ground connection per IEEE C62.41-1991.

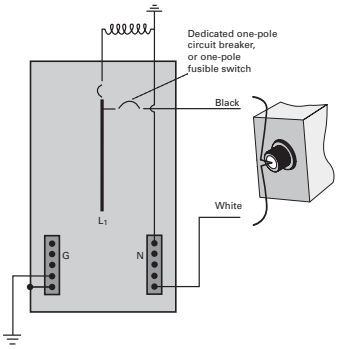

SPD catalog numbers:

- BSPA
  - Specify from build-a-code catalog number system
- SurgePOD™ PRO
  - SPP40SP1120SN

Three wire split-phase/two-pole - 3 connection points

Application: Service entrance panel

Volts: 120, 240 (L-N)

Note: Installation for where the SPD is greater than 10 feet (3m) from a bonded neutral-ground connection.

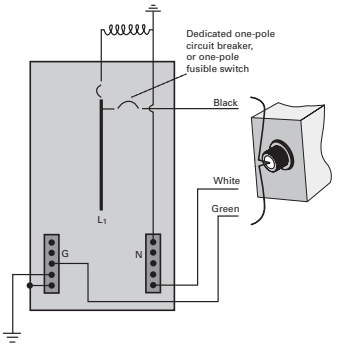

SPD catalog numbers:

- BSPA
  - Specify from build-a-code catalog number system

Three wire split-phase/two-pole - 3 connection points

Application: Sub-panel or feeder panel

Volts: 120, 240 (L-N), 240, 480 (L1-L2)

Note: Installation at or less than 10 feet (3m) from the transformer and within 10 feet (3m) of a bonded-neutral ground connection.

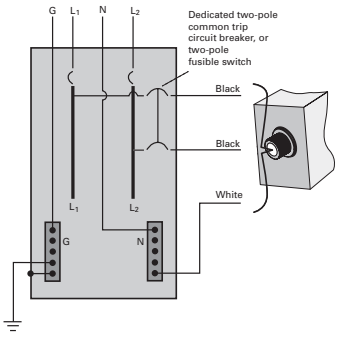

SPD catalog numbers:

- BSPA
  - Specify from build-a-code catalog number system
- SurgePOD PRO
  - SPP40SP2240PN

Three wire split-phase/two-pole plus ground - 4 connection points

Application: Service entrance equipment

Volts: 120, 240 (L-N), 240 (L1-L2)

Note: Installation where greater than 10 feet (3m) of a bonded-neutral ground connection.

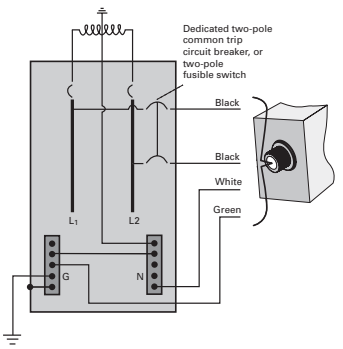

SPD catalog numbers:

- BSPA
  - Specify from build-a-code catalog number system

Three wire split-phase/two-pole plus ground - 4 connection points

Application: Sub-panel or feeder panel

Volts: 120, 240 (L-N), 240 (L1-L2)

Note: For installation greater than 10 feet (3m) of a bonded-neutral ground connection.

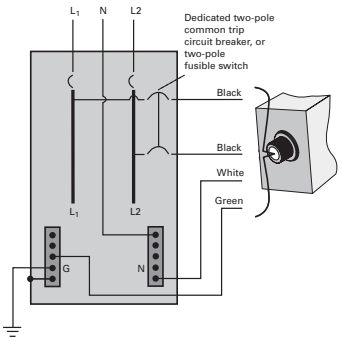

SPD catalog numbers:

- BSPA
  - Specify from build-a-code catalog number system

Three wire Delta plus ground - 4 connection points

Application: Service entrance equipment, sub-panel or feeder panel

Volts: 240, 480, 600 (L-L)

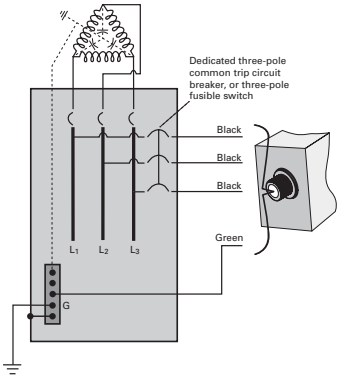

SPD catalog numbers:

- BSPA
  - Specify from build-a-code catalog number system
- BSPD
  - Specify from build-a-code catalog number system

Three wire Wye plus ground - 4 connection points

Application: Sub-panel or feeder panel

Volts: 208, 480, 600 (L-L)

Note: A common MCC configuration for pumping and water/waste water treatment.

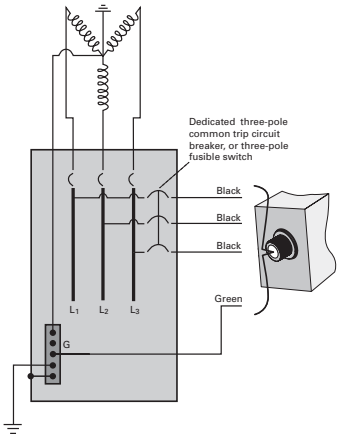

SPD catalog numbers:

- BSPA
  - Specify from build-a-code catalog number system
- SurgePOD PRO
  - SPP40SP3208WYG
  - SPP4SP3480WYG

Four wire Wye plus ground - 5 connection points

Application: Service entrance equipment

Volts: 120, 127, 277, 347 (L-N), 208, 220, 480, 600 (L-L)

Note: Common system configuration with Neutral pulled into facility and bonded to ground.

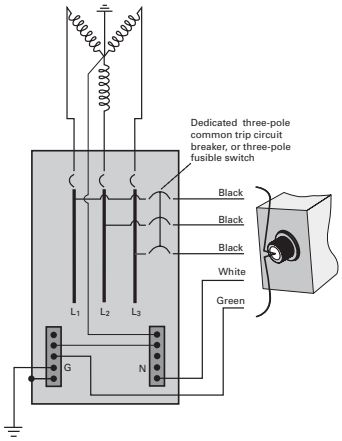

SPD catalog numbers:

- BSPA
  - Specify from build-a-code catalog number system
- BSPD
  - Specify from build-a-code catalog number system

Four wire Wye plus ground - 5 connection points

Application: Sub-panel or feeder panel

Volts: 120, 127, 277, 347 (L-N), 208, 220, 480, 600 (L-L)

Note: Common system configuration with Neutral pulled into facility and bonded to ground.

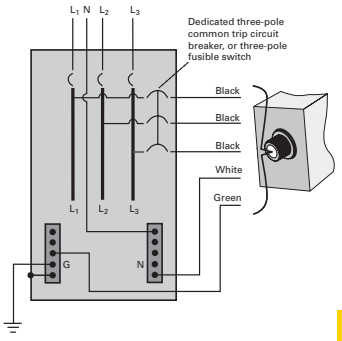

SPD catalog numbers:

- BSPA
  - Specify from build-a-code catalog number system
- BSPD
  - Specify from build-a-code catalog number system

SurgePOD™ PRO for UL 1449 4th Edition Listed loadside and lineside protection

The Bussmann series SurgePOD PRO is a Type 1 UL Listed 1449 4th Edition surge protective device suitable for installation on both the loadside or lineside of the service entrance overcurrent protective device and is well suited for light commercial and residential applications.

Available in popular voltage and system specific versions to match common residential and light commercial electrical system and equipment requirements. The SurgePOD PRO delivers superior surge protection using MOV thermal disconnect technology that eliminates the need for additional overcurrent protection.

LISTED

RoHS 2011/65/EU

*easy*ID™ LED Status Indicator

Parallel connection to the electrical system permits the SurgePOD PRO SPD to be installed on any ampacity panel.

- Type 1 UL 1449 4th Edition Listed SPDs are easily selected and installed on the loadside or lineside of the service entrance overcurrent protective device
- Voltage specific models precisely match and protect electrical systems and equipment better than "one-size-fits-all" SPDs
- Thermal disconnect technology eliminates the need for additional fusing
- NEMA 4X enclosure for indoor or outdoor applications
- *easy*ID™ LED status indicator provides surge protection status at a glance

Dimensions — in

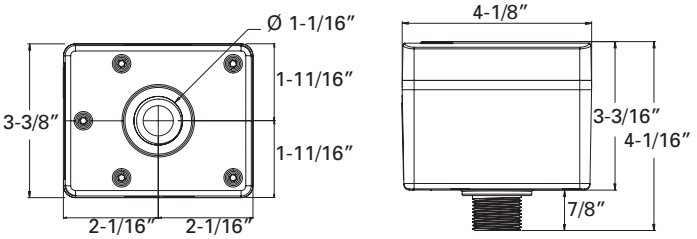

Mounting

SurgePOD PRO is a panel mount device. It may also be mounted using a customer supplied bracket or directly onto a female threaded conduit fitting.

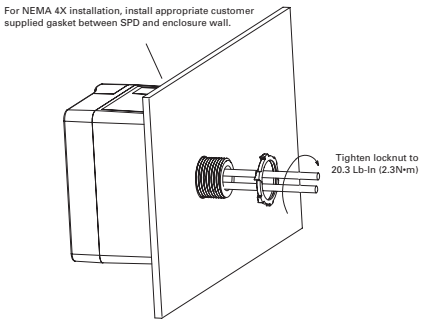

Catalog no.		
SPP40SP1120SN	SPP40SP3240DLG	SPP40SP3208WYG
SPP40SP2240PN	SPP40SP3480DLG	SPP40SP3480WYG
SPP40SP3600WYG		

See catalog number explanation below for details.

Catalog number explanation

This is not a build-a-code for configuring an orderable catalog number. It's purpose is to show what portions of the catalog number denotes which specification.

SPP 40S Px xxx xxx

SPP = Product family

Surge rating

- 40 kA surge current capacity

Number of wires

- P1 = 1, P2 = 2, P3 = 3

System voltage (Vac)

- 120, 208, 240, 480, 600

System type/wires and connection points

- SN = Single-phase 2 wire, 2 connection points
- PN = Split-phase 3 wire , 3 connection points
- DLG = Three-phase Delta 3 wire + G, 4 connection points
- WYG = Three-phase Wye 3 wire + G, 4 connection points

*easy*ID™ LED status indicator

The *easy*ID LED status indicator will illuminate when the unit is properly installed and the system or equipment being protected is energized. The following LED color/status indicates:

GREEN LED = Good

The circuit is energized and protected.

RED LED = Replace

The circuit is energized and unprotected.

The unit needs replacing.

LED is Out / Unlit:

The circuit is most likely deenergized

The unit's leads are disconnected

The unit is damaged

Authorized personnel should follow all prescribed lockout/tagout and safety procedures in troubleshooting the cause for the above conditions. Opening SurgePOD PRO enclosure will void the warranty.

Data sheet no. 10033

SurgePOD PRO

Catalog no.	Nominal system voltage	Max. continuous operating AC voltage (MCOV) (V_C)	System type	Connection points
SPP40SP1120SN	120	150	Single-phase 2 wire	2
SPP40SP2240PN	120/240	150	Split-phase 3 wire	3
SPP40SP3240DLG	240	320	Three-phase Delta 3 wire + G	4
SPP40SP3480DLG	480	550	Three-phase Delta 3 wire + G	4
SPP40SP3208WYG	208	150	Three-phase Wye 3 wire + G	4
SPP40SP3480WYG	480	320	Three-phase Wye 3 wire + G	4
SPP40SP3600WYG*	600	420	Three-phase Wye 3 wire + G	4

* Not CSA Certified.

Specifications (for all SurgePOD PRO units)	Values
Short-Circuit Current Rating (SCCR)	200 kA
Nominal discharge current (8x20µs) (I_n)	10 kA
Surge current capacity (8x20µs) (I_{max})	40 kA
Response time (ns) (t_A)	<25ns
Frequency	50/60 Hz
Operating state/fault indication	Bi-color LED - green (good) / red (replace)
Conductor length / gauge	18 inches, 10 AWG stranded tinned copper
Mounting	Chase nipple / bracket*
Enclosure / flammability ratings	NEMA 4X - UL 94-5VA
Degree of protection (installed state)	IP20 (finger-safe)
SPD install location	Indoor/outdoor
Circuit location	Lineside or loadside of service entrance overcurrent protective device
Operating temperature	-40°C to +65°C
Maximum operating altitude	12,000FT
Agency information	UL Listed, CSA Certified, RoHS compliant
Standard	UL Type 1 1449 4th Edition SPD
Warranty	Two years**

* Customer-supplied bracket.
**See Limited Warranty Statement 3A1502 for details at Eaton.com/bussmannseries.

Voltage protection ratings (VPR)

Catalog no.	Nominal system voltage	MCOV (V_C)	Voltage Protection Ratings (VPR)		
			L-N	L-L	L-G
SPP40SP1120SN	120	150	700	—	—
SPP40SP2240PN	120V/240	150	700	1200	—
SPP40SP3240DLG	240	320	—	2500	1200
SPP40SP3480DLG	480	550	—	3000	1800
SPP40SP3208WYG	208	150†	—	1200	700
SPP40SP3480WYG	480	320†	—	2500	1200
SPP40SP3600WYG	600	420†	—	2500	1500

† SPD voltages are measured from Line-to-Neutral, or Line-to-Ground on systems where there is no neutral present. These units do not have a line-to-neutral, so the line-to-ground voltage is 120 V for the 208 V Wye L-G and 277 V for the 480 V L-G, making the normal voltage applied to the unit less than the MCOV values listed in the table.

BSPA NEMA 4X Type 1 and 2

RoHS 2011/65/EU

The Bussmann series BSPA surge protective devices are UL 1449 4th Edition surge protectors. Application of BSPA units throughout a facility will help ensure that equipment is protected from damaging surges.

The BSPA compact NEMA 4X enclosure allows for installation external to an electrical assembly in a variety of environments.

BSPA units are available in all common voltage and system configurations, and in a variety of peak surge current capacity ratings from 50 through 200 kA per phase. Several feature package options (filtering, audible alarm and Form C contacts) extend application flexibility along with a range of configurable options suitable for most commercial and light industrial applications covering service entrances, distribution panelboards and point-of-use applications.

Agency information

- UL 1449 4th Edition Type 1 and Type 2
- UL 1283 6th Edition
- Canadian Standards Association (CSAT) Type 1 and Type 2
- CSA C22.2 No. 269.1-14 for Type 1 SPD, CSA C22.2 No. 269.2-13 for Type 2 SPD, CSA C22.2 No. 8-13 for EMI filter
- RoHS compliant

Features

- Thermally-protected metal oxide varistor (MOV) technology
- Tri-colored LED status indicators display continuous self-diagnostic testing, including neutral-ground mode
- 20 kA nominal discharge current (I_n) rating (maximum rating in the UL 1449 4th Edition standard)
- 50 through 200 kA per phase peak surge current capacity ratings
- Configure to order with five feature/option combinations
- Corrosion-resistant NEMA 4X enclosure with detachable mounting feet
- 200 kA short-circuit current rating (SCCR)
- Factory wired with 36-inch 10 AWG leads
- Optional Form C contact relay for integration into remote monitoring systems*
- Optional EMI/RFI filtering form improved power quality*
- Optional audible alarm*
- No user-serviceable parts or items requiring periodic maintenance
- Ten-year warranty

* See catalog number system for availability.

Catalog number system

The catalog numbering system permits specifying any combination to meet requirements.

BSPA 200 208Y 8 P

BSPA = Product family

Surge rating per phase

- 050 = 50 kA per phase
- 100 = 100 kA per phase
- 150 = 150 kA per phase
- 200 = 200 kA per phase

Voltage/system code

- 120N = 120 V single-phase (2W +G)
- 240N = 240 V single-phase (2W +G)
- 240S = 120/240 V split-phase (3W +G)
- 240D = 240 V Delta (3W + G)
- 480D = 480 V Delta (3W + G)
- 600D = 600 V Delta (3W + G)
- 208Y = 120/208 V Wye (4W + G)
- 415Y = 240/415 V Wye (4W + G)
- 480Y = 277/480 V Wye (4W + G)
- 600Y = 347/600 V Wye (4W + G)

Options

- 1 = No options (standard configuration), Type 1
- 4 = Form C relay, Type 1
- 5 = Audible alarm and Form C relay, Type 1
- 7 = EMI filtering and Form C relay, Type 2
- 8 = EMI filtering, audible alarm and Form C relay, Type 2

NEMA enclosure

- P = NEMA 4X

BSPA wire port and conductors

BSPA with mounting feet

Data sheet no. 10661

BSPA configurations

The BSPA allows for selecting along with the standard features the audible alarm, Form C relay contacts and EMI/RFI filtering options shown in table 1.

Configurable features

Feature	Standard	Options
Surge protection using thermally protected MOV technology	•	
Tri-colored LED protection status indicators for each phase	•	
Tri-colored LED protection status indicators for the neutral-ground protection mode	•	
Audible alarm		•
Form C relay contact		•
EMI/RFI filtering, for up to 40 dB of noise attenuation from 10 kHz to 100 MHz*		•

* Available on Type 2 SPD units only.

Tri-colored LED status indicators

These LED indicators show continuous self-diagnostic testing, including neutral-ground mode and display:

- Green—Fully protected
- Yellow—Loss of neutral-to-ground protection
- Red—Loss of protection

LED protection status indicators showing full protection and phase faults

Enclosure ratings, options, dimensions and weights

The BSPA NEMA 4X enclosure is supplied with mounting feet to facilitate installation in a variety of applications. There are two enclosure sizes, P1 and P2, dependent on the voltage code and surge rating.

Available optional equipment

Available option	Catalog no.
Flush mount plate for P1 enclosure	BSPA-FLUSHPLT1
Flush mount plate for P2 enclosure	BSPA-FLUSHPLT2

BSPA voltage configurations per enclosure size*

P1 enclosure		P2 enclosure	
Voltage code	kA	Voltage code	kA
120N/240N	50–200	240S	120–200
240S	50-100	208Y/415Y/480Y/600Y	
208Y/415Y/480Y/600Y		240D/480D	
240D/480D		600D	50–200

* See catalog number system for voltage code details.

Voltage protection ratings (VPRs) per ANSI/UL 1449 4th Edition

Voltage code	Protection mode			
	L–N	L–G	N–G	L–L
50 kA unit VPR				
120N	700	1200	700	—
240N	1200	2000	1500	—
240S	700	1200	700	1200
208Y	700	1200	700	1200
415Y	1200	2000	1500	2000
480Y	1200	2000	1500	2000
600Y	1500	1500	1500	2500
240D	—	1000	—	1000
480D	—	2000	—	2500
600D	—	2500	—	2500
100 kA unit VPR				
120N	600	600	600	—
240N	1200	1200	1200	—
240S	600	600	600	1000
208Y	600	600	600	1000
415Y	1200	1200	1200	2000
480Y	1200	1200	1200	2000
600Y	1500	1500	1500	2500
240D	—	1000	—	1000
480D	—	2000	—	2500
600D	—	2500	—	2500
150-200 kA unit VPR				
120N	700	700	700	—
240N	1000	1200	1000	—
240S	700	700	700	1200
208Y	700	700	700	1200
415Y	1200	1200	1200	2000
480Y	1200	1200	1200	2000
600Y	1500	1500	1500	2500
240D	—	1000	—	1000
480D	—	1800	—	2000
600D	—	2500	—	2500

BSPA specifications

Description		Value
Leads	Length	36″
	Size	10 AWG stranded copper
Mounting		Chase nipple/panel (with mounting feet)
Peak surge current capacity ratings available		50, 100, 150, 200 kA per phase
Nominal discharge current (In)		20 kA
Short-circuit current rating (SCCR)		200 kA
Single-phase voltages available (2W + G)		120, 240
Split-phase voltages available (3W +G)		120/240
Three-phase Wye system voltages available (4W + G)		120/208, 240/415, 277/480, 347/600
Three-phase Delta system voltages available (3W + G)		240, 480, 600
Input power frequency		50/60 Hz
Protection modes	Single–phase	L–N, N–G, L–G
	Split–phase	L–N, N–G, L–G, L–L
	Wye	L–N, N–G, L–G, L–L
	Delta	L–G, L–L
Maximum continuous operating voltage (MCOV):	Voltage code	
	120N	150 L–N, 150 L–G, 150 N–G
	240N	320 L–N, 320 L–G, 320 N–G
	240S, 208Y	150 L–N, 150 L–G, 150 N–G, 300 L–L
	415Y, 480Y	320 L–N, 320 L–G, 320 N–G, 640 L–L
	600Y	420 L–N, 420 L–G, 420 N–G, 840 L–L
	240D	320 L–G, 300 L–L
	480D	550 L–G, 640 L–L
	600D	840 L–G, 840 L–L
Ports		1
Operating and storage temperature		–40°F to +140°F (–40°C to +60°C)
Operating humidity		5% through 95%, non-condensing
Operating altitude		Up to 2000 m (6561 ft)
Agency information		UL 1449 4th edition, UL 1283 6th edition, CSA C22.2 No. 269.1-14 for Type 1 SPD, CSA C22.2 No. 269.2-13 for Type 2 SPD, CSA C22.2 No. 8-13 for EMI filter
Durability/repetitive strike test		Passed 12,000 strikes to ANSI/IEEE C62.41 (20 kV, 10 kA) Category C waveform
SPD type		UL 1449 4th edition and CSA Type 1 and Type 2 SPD (dependent on feature options)
Enclosure dimensions and weights		Refer to Figure 1 and Figure 3 for enclosure dimensions and weights
Enclosure rating		NEMA 4X enclosure*
Form C relay contact ratings		2 A at 30 Vdc or 250 Vac
Form C relay contact logic		Power ON, normal state—NO contact = open, NC contact = closed
		Power OFF or fault state—NO contact = closed, NC contact = open
EMI/RFI filtering attenuation		Up to 40 dB from 10 kHz to 100 MHz
RoHS compliant		Yes
Warranty		Ten years standard

* Mounting feet required to achieve NEMA 4X rating.

Data sheet no. 10661

Dimensions — in (mm)

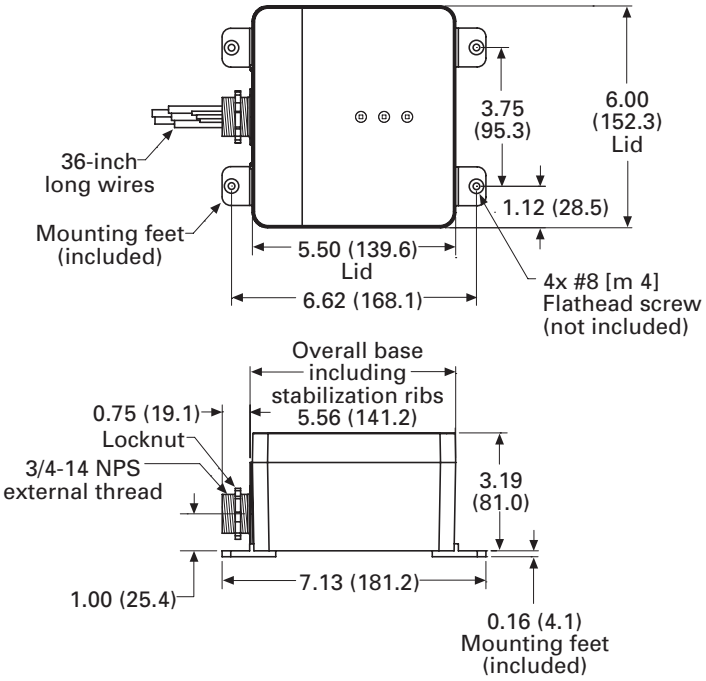

P1 enclosure, NEMA 4X with mounting feet dimensions, weight = 2.5 lb

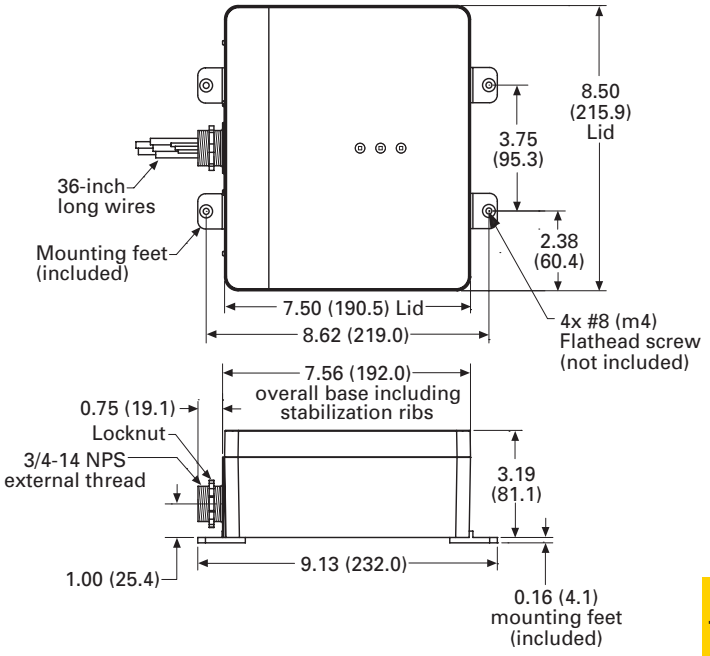

P2 enclosure, NEMA 4X with mounting feet dimensions, weight = 4 lb

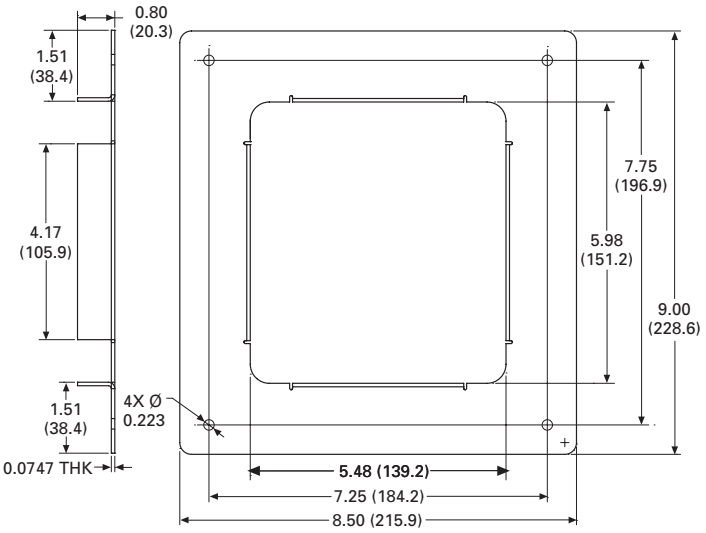

Optional flush mount plate for P1 enclosure (catalog number BSPA-FLUSHPLT1)

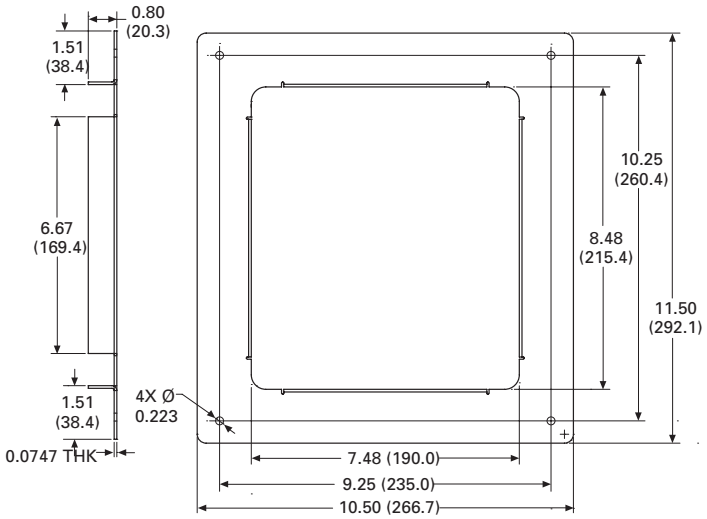

Optional flush mount plate for P2 enclosure (catalog number BSPA-FLUSHPLT2)

BSPD high capacity Type 1 and 2

BSPD Surge Protective Devices (SPDs) are UL Listed 1449 4th Edition Type 1 or UL Recognized 1283 5th Edition Type 2 surge protectors, depending on the configuration. The BSPD is available for installation external to an electrical enclosure or panelboard. Application of BSPD units throughout a facility will help ensure that equipment is protected.

NEMA 1 steel enclosure 120 kA and 200 kA maximum surge current capacity

BSPD units are available for common Delta and Wye voltage systems in a variety of surge current capacity ratings from 120 kA through 400 kA. Available in three configurations, the BSPD's configurations and options make it easy to specify units for many electrical applications; including service entrances, distribution switchboards, panelboards and point-of-use.

NEMA 1 steel enclosure 300 kA and 400 kA maximum surge current capacity

- *Basic*, *Standard* and *Standard with Surge Counter* configurations UL Listed 1449 4th Edition, Guide VZCA, File E316410, CSA Certified Notice 516 File 243397
- Standard and Standard with Surge Counter configurations are also UL Recognized 1283 5th Edition, Guide VZCA2, File E316410, CSA Component Acceptance Std. C22.2

NEMA 4X 304 Stainless Steel enclosure, all surge current capacities

- RoHS compliant
- 20 kA nominal discharge current (I_n) rating (maximum rating assigned by UL)
- 120 kA through 400 kA per phase surge current capacity (I_{max}) ratings
- 200 kA Short-Circuit Current Rating (SCCR)
- Two color LED status indicators for each phase on Delta and Wye units, plus N-G on Wye units
- 10-Year warranty

Configurations

The BSPD provides users with the option of selecting between three configurations:

- *Basic* (Type 1)
- *Standard* with Form C contact and EMI/RFI filter (Type 2)
- *Standard with Surge Counter* (Type 2)

The appropriate configuration can be specified from the catalog number system based on the application's requirements or specifications.

Catalog number system

The catalog numbering system permits specifying any combination to meet requirements.

BSPD 200 480D 2 K

BSPD = Product family

Surge rating per phase

- 120 = 120 kA
- 200 = 200 kA
- 300 = 300 kA
- 400 = 400 kA

Voltage/system code

- 208Y = 120/208 Wye (4W + G)
- 480Y = 277/480 Wye (4W + G)
- 600Y = 347/600 Wye (4W + G)
- 240D = 240 Delta (3W + G)
- 480D = 480 Delta (3W + G)
- 600D = 600 Delta (3W + G)

Configurations

- 1 = Basic
  - Green and red LEDs per phase to indicate protection status.
  - Green and red LEDs on Wye units to indicate protection status of the neutral-to-ground mode
- 2 = Standard
  - Green and red LEDs per phase to indicate protection status
  - Green and red LEDs on Wye units to indicate protection status of the neutral-to-ground mode
  - Audible alarm with silence button
  - Form C contact relay
  - EMI/RFI filtering providing up to 50 dB of noise attenuation from 10 kHz to 100 MHz
- 3 = Standard With Surge Counter
  - Green and red LEDs per phase to indicate protection status
  - Green and red LEDs on Wye units to indicate protection status of the neutral-to-ground mode
  - Audible alarm with silence button
  - Form C contact relay
  - EMI/RFI filtering providing up to 50 dB of noise attenuation from 10 kHz to 100 MHz
  - Surge counter with reset button

NEMA enclosures

- K = NEMA 1
- P = NEMA 4X

Data sheet no. 10209

BSPD configurations

Features	Configuration: Basic (Type 1)	Standard (Type 2)	Standard with Surge Counter (Type 2)
Two color LED protection status indicators for each phase	X	X	X
Two color LED protection status indicators for the neutral-ground protection mode (Wye systems only)	X	X	X
Audible alarm with silence button		X	X
Form C contact relay		X	X
EMI/RFI filtering, providing up to 50 dB of noise attenuation from 10 kHz to 100 MHz		X	X
Surge counter with reset button			X

Dimensions — in (mm)

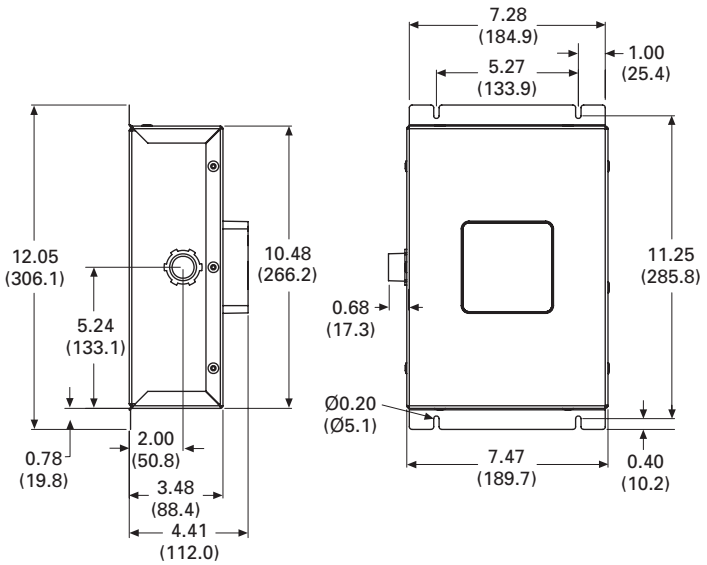

120 kA and 200 kA Units/NEMA 1

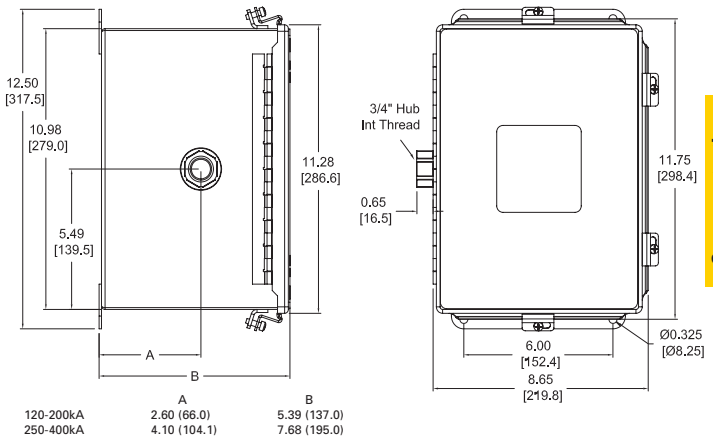

120 kA to 400 kA Units/NEMA 4X

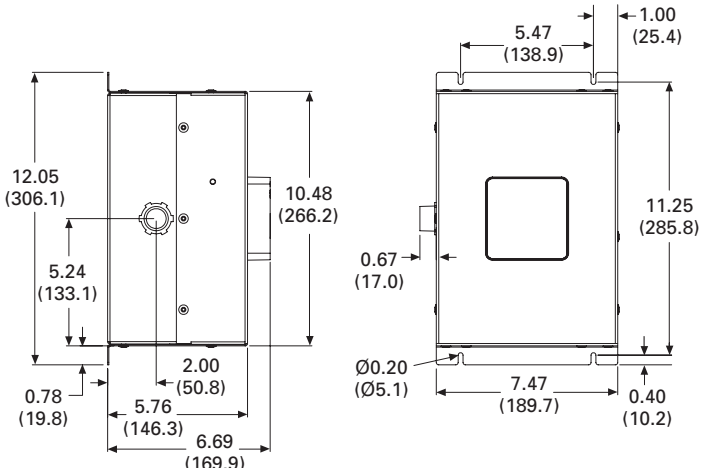

300 kA and 400 kA Units/NEMA 1

Form C Contact relay wire color codes

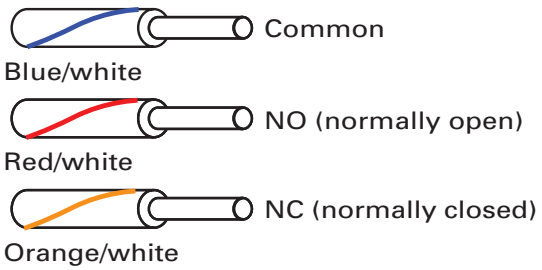

Surge protective devices

Data sheet no. 10209

BSPD specifications

Description	Values
Available system voltages	
Three-phase Wye	120/208, 277/480 and 347/600
Three-phase Delta	240, 480 and 600
Input power frequency	50/60 Hz
Maximum Continuous Operating Voltage (MCOV)	
208Y, and 240D voltage/system codes	150 L-N,150 L-G, 150 N-G, 300 L-L
480Y Voltage/system code	320 L-N, 320 L-G, 320 N-G, 640 L-L
600Y Voltage/system code	420 L-N, 420 L-G, 420 N-G, 840 L-L
480D Voltage/system code	640 L-G, 640 L-L
600D Voltage/system code	840 L-G, 840 L-L
Short-Circuit Current Rating (SCCR)	200 kA
Nominal discharge current (I_n)	20 kA
Surge current capacity per phase (I_{max})	120 kA, 200 kA, 300 kA and 400 kA ratings available
SPD Types	
Type 1	*Basic* configuration, can also be used in Type 2 applications
Type 2	*Standard* and *Standard With Surge Counter* configurations
Enclosure types	NEMA 1
	NEMA 4X 304 stainless steel
Ports	1
SPD conductor length/gauge	48" (1.22m) 10 AWG Stranded copper
Form C contact relay (*Standard* and *Standard With Surge Counter* configurations only)	
Contact ratings	150 Vac or 125 Vdc, 1A maximum
Lead length/gauge	48 inches (1.22m) / 14 AWG
Contact logic	Power ON, normal state; N.O. contact = OPEN, N.C. contact = CLOSED Power OFF, fault state; N.O. contact = CLOSED, N.C. contact = OPEN
Power consumption	
Basic configuration	0.5 W — 208Y and 240D voltage/system codes
	1.1 W — 480Y and 480D voltage/system codes
	1.3 W — 600Y and 600D voltage/system codes
Standard and Standard with Surge Counter configurations	0.6 W — 208Y and 240D voltage/system codes
	1.7 W — 480Y, and 480D voltage/system codes
	2.1 W — 600Y and 600D voltage/system codes
Protection modes	
Three-phase Delta	L-G, L-L
Three-phase Wye	L-N, L-G, N-G, L-L
Operating temperature / humidity	-40 to +50°C (-40 to +122°F) / 5% to 95%, non-condensing
Operating altitude - ft (m)	16,000 (5000)
EMI/RFI filtering attenuation	Up to 50 dB from 10 kHz to 100 MHz (*Standard* and *Standard With Surge Counter* configurations)
Weight - lbs (kg)	
NEMA 1	120-200 kA - 6.8 (3.1)
	300- 400 kA -13.5 (6.1)
NEMA 4X	120-200 kA - 14.6 (6.6)
	300-400 kA - 21.0 (9.5)
Agency information	
Basic, Standard and *Standard with Surge Counter* configurations	UL Listed 1449 4th Edition File E316410 Guide VZCA, CSA Certified Notice 516 File 243397
Standard and *Standard with Surge Counter* configurations	UL Recognized 1283 5th Edition File E316410 Guide VZCA2, CSA Component Acceptance Std. C22.2 No. 8-M1986, File 243397
RoHS compliant	Yes
Seismic withstand capability	Meets or exceeds the requirements specific to I.B.C. 2006, C.B.C. 2007 and U.B.C. Zone 4
Warranty	10 Years (see warranty statement 3A1502 for details at Eaton.com/bussmannseries)

Data sheet no. 10209

Voltage protection ratings

ANSI/UL 1449 4th Edition voltage protection ratings

Voltage Protection Rating (V_{PR}) data for all units is included in the following tables, The data varies based upon the configuration and NEMA enclosure. V_{PR} values for the *Basic* configurations are on the left-hand side of the page. Tables on the right-hand side contain VPR values for the *Standard* or *Standard with Surge Counter* configurations.

NEMA 1: Basic

Catalog numbers ending with 1K.

120-200 kA

	Protection mode			
Voltage/system code	L-N	L-G	N-G	L-L
208Y	700	700	700	1200
480Y	1200	1200	1200	2000
600Y	1500	1500	1500	2500
240D	—	1000	—	1000
480D	—	2000	—	2500
600D	—	2500	—	2500

300 kA

	Protection mode			
Voltage/system code	L-N	L-G	N-G	L-L
208Y	700	700	700	1000
480Y	1200	1200	1200	1800
600Y	1500	1500	1500	2500
240D	—	1000	—	1000
480D	—	1800	—	2000
600D	—	2500	—	2500

400 kA

	Protection mode			
Voltage/system code	L-N	L-G	N-G	L-L
208Y	700	700	700	1000
480Y	1200	1200	1200	1800
600Y	1500	1500	1500	2500
240D	—	1000	—	1000
480D	—	1800	—	2000
600D	—	2500	—	2500

NEMA 1: Standard or Standard w/ Surge Counter

Catalog numbers ending with 2K or 3K.

120-200 kA

	Protection mode			
Voltage/system code	L-N	L-G	N-G	L-L
208Y	600	800	600	1000
480Y	1200	1200	1200	1800
600Y	1500	1500	1500	2500
240D	—	1000	—	1000
480D	—	2500	—	2500
600D	—	2500	—	2500

300 kA

	Protection mode			
Voltage/system code	L-N	L-G	N-G	L-L
208Y	600	700	600	1000
480Y	1000	1200	1000	1800
600Y	1500	1500	1500	2500
240D	—	1000	—	1000
480D	—	1800	—	2000
600D	—	2500	—	2500

400 kA

	Protection mode			
Voltage/system code	L-N	L-G	N-G	L-L
208Y	600	700	600	1000
480Y	1000	1200	1000	1800
600Y	1500	1500	1500	2500
240D	—	1000	—	1000
480D	—	1800	—	2000
600D	—	2500	—	2500

Voltage protection ratings continued

NEMA 4X: Basic

Catalog numbers ending with 1P.

120–200 kA

Voltage/system code	Protection mode			
	L-N	L-G	N-G	L-L
208Y	700	800	700	1200
480Y	1200	1200	1000	2000
600Y	1500	1500	1500	2500
240D	—	1000	—	1000
480D	—	2000	—	2500
600D	—	2500	—	2500

300 kA

Voltage/system code	Protection mode			
	L-N	L-G	N-G	L-L
208Y	700	800	700	1200
480Y	1200	1200	1200	2000
600Y	1500	1500	1500	2500
240D	—	1000	—	1000
480D	—	1800	—	2000
600D	—	2500	—	2500

400 kA

Voltage/system code	Protection mode			
	L-N	L-G	N-G	L-L
208Y	700	800	700	1200
480Y	1200	1200	1200	2000
600Y	1500	1500	1500	2500
240D	—	1000	—	1000
480D	—	1800	—	2000
600D	—	2500	—	2500

NEMA 4X: Standard or Standard w/ Surge Counter

Catalog numbers ending with 2P or 3P.

120–200 kA

Voltage/system code	Protection mode			
	L-N	L-G	N-G	L-L
208Y	900	900	700	1500
480Y	1200	1200	1000	2500
600Y	1500	1500	1500	2500
240D	—	1000	—	1000
480D	—	2500	—	2500
600D	—	2500	—	2500

300 kA

Voltage/system code	Protection mode			
	L-N	L-G	N-G	L-L
208Y	800	900	700	1500
480Y	1200	1200	1000	2000
600Y	1500	1500	1500	2500
240D	—	1000	—	1000
480D	—	2000	—	2000
600D	—	2500	—	2500

400 kA

Voltage/system code	Protection mode			
	L-N	L-G	N-G	L-L
208Y	800	900	700	1500
480Y	1200	1200	1000	2000
600Y	1500	1500	1500	2500
240D	—	1000	—	1000
480D	—	2000	—	2000
600D	—	2500	—	2500

1-Pole, UL Type 1 DIN-Rail high SCCR surge protective devices

RoHS 2011/65/EU

Dimensions — mm

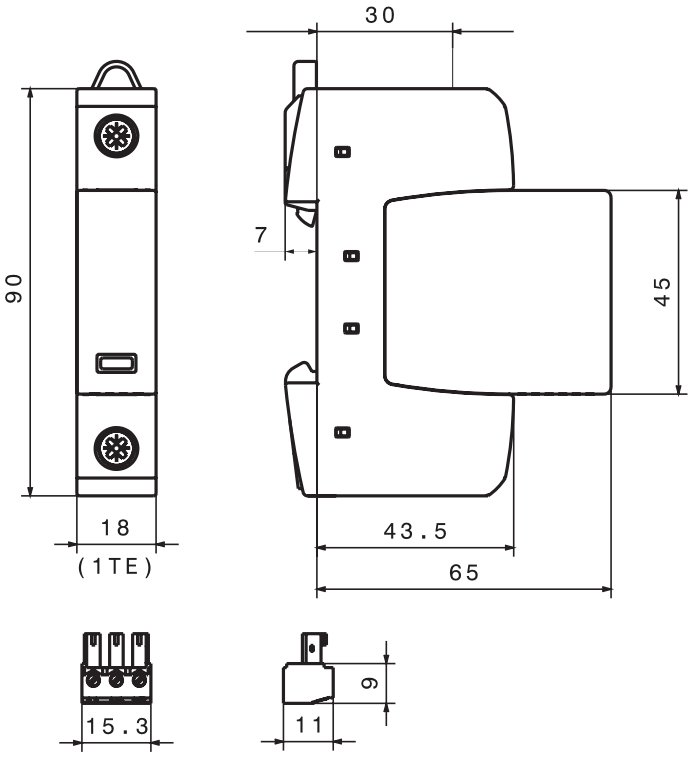

Catalog symbol:

- BSPMA1_S2GR

Description:

The Bussmann™ series one-pole DIN-Rail UL Listed Type 1 surge protective devices feature a high 200 kA SCCR. Replaceable arrestor modules are mechanically coded with the base to ensure against installing an incorrect replacement. The unique module locking system fixes the module to the base, and allows it to be easily replaced without tools by simply depressing the release buttons.

Standard local visual status indication:

The module's visual indicator shows the protective status at a glance: green = good, red = replace.

Remote contact signaling:

The standard three-pole terminal remote Form C contact signaling relay has a floating changeover contact for use as a break or make contact, according to circuit concept.

Ratings:

- System volts/types
  - 120 Vac single-phase
  - 240 Vac single-phase
- Short-circuit Current Rating (SCCR) 200 kA

Agency information:

- UL Listed open Type 1, ANSI/ UL 1449 4th Edition, Guide VZCA, VZCA7
- CSA Type 4-1 Component Assembly, C22.2 No. 269.1-14, Class 2157-27
- RoHS compliant

Mounting

- 35mm Din-Rail

Warranty

- Five years

Data sheet no. 10771

Specifications/ordering information		
System voltage/type	120 Vac single-phase	240 Vac single-phase
Catalog number	BSPMA1120S2GR	BSPMA1240S2GR
Replacement module catalog number (qty.)	BPMA230UL (1)	BPMA385UL (1)
SPD class per ANSI/UL 1449 4th Ed.	Open-Type 1 SPD	
SPD class per CSA - C22.2 No. 269.1-14	Type 4-1 Component Assembly	
Nominal system voltage (U_N) [L-N/L-G]	127 Vac	277 Vac
Nominal power frequency	50 / 60 Hz	
Max. continuous operating voltage AC (MCOV) [L-L]	230 Vac	385 Vac
Nominal discharge current (I_n) (8x20µs)	20 kA	
Max. discharge current (I_{max}) (8/20)	50 kA	
Voltage Protection Rating (VPR) [L-L]	700 V_{pk}	1200 V_{pk}
Short Circuit Current Rating (SCCR)	200 kA	
Operating temperature range (T_U) °F (°C)	-31 to 185 (-35 to 85)	
Operating state / fault indication	Green = good ; Red = replace	
Wire range (60/75°C Cu, solid/stranded)	2-14 AWG (2.5-35 mm^2)	
Terminal torque — lb-in (N•m)	35-45 (4-5.1)	
Mounting	35 mm DIN-Rail per EN 60715	
Enclosure material	Thermoplastic, UL 94 V0	
Protection	IP20 (finger-safe)	
Capacity	1 module(s), DIN 43880	
Agency information	UL Listed, Guide VZCA, VZCA7/CSA Component Acceptance Class 2157-27, RoHS	
Weight - oz (g)	4.13 (117)	4.44 (126)
Contact signaling		
Signaling type	Floating (dry), Form C (SPDT)	
NEC Circuits	NEC Class 2 circuits only	
Switching capacity AC (DC)	250 V/5 A (250 V/0.1 A, 125 V/0.2 A, 75 V/0.5 A)	
Wire range (60/75°C Cu, solid/stranded)	16-22 AWG (1.5-0.34mm^2)	
Terminal torque - lb-in (N•m)	1.8 (0.2)	

Typical installation/system application:

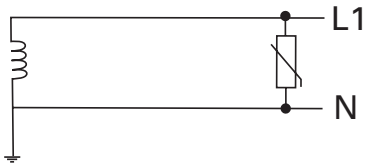

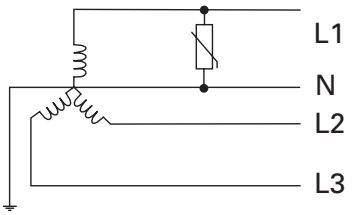

Data sheet no. 10771

2-Pole, UL Type 1 DIN-Rail high SCCR surge protective devices

RoHS 2011/65/EU

Dimensions — mm

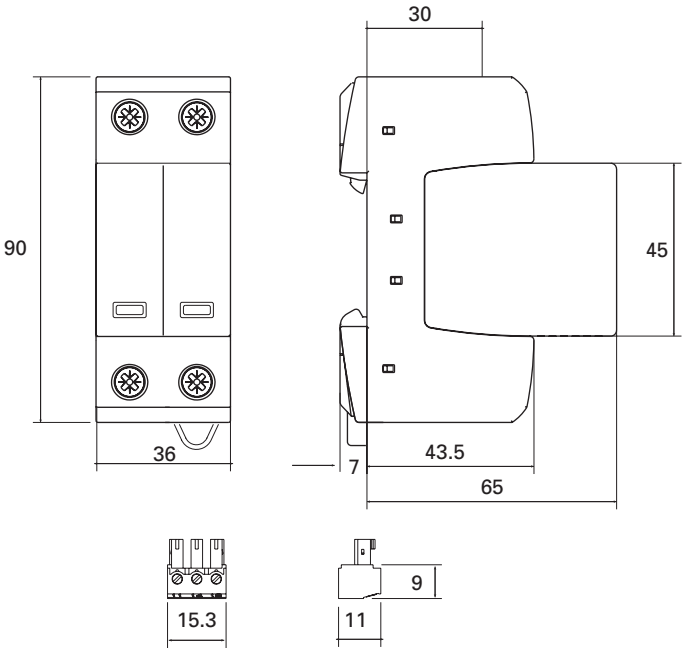

Catalog symbol:

- BSPMA2_S3GR

Description:

The Bussmann™ series two-pole DIN-Rail UL Listed Type 1 surge protective devices feature a high 200 kA SCCR. Replaceable arrestor modules are mechanically coded with the base to ensure against installing an incorrect replacement. The unique module locking system fixes the module to the base, and allows it to be easily replaced without tools by simply depressing the release buttons.

Standard local visual status indication:

The module's visual indicator shows the protective status at a glance: green = good, red = replace.

Remote contact signaling:

The standard three-pole terminal remote Form C contact signaling relay has a floating changeover contact for use as a break or make contact, according to circuit concept.

Ratings:

- System volts/types
  - 120/240 Vac split-phase
  - 240/480 Vac split-phase
- Short-circuit Current Rating (SCCR) 200 kA

Agency information:

- UL Listed open Type 1, ANSI/ UL 1449 4th Edition, Guide VZCA, VZCA7
- CSA Type 4-1 Component Assembly, C22.2 No. 269.1-14, Class 2157-27
- RoHS compliant

Mounting

- 35mm Din-Rail

Warranty

- Five years

Specifications/ordering information		
System voltage/type	120/240 Vac split-phase	240/480 Vac split-phase
Catalog number	BSPMA2240S3GR	BSPMA2480S3GR
Replacement module catalog number (qty.)	BPMA230UL (2)	BPMA385UL (2)
SPD class per ANSI/UL 1449 4th Ed.	Open-Type 1 SPD	
SPD class per CSA - C22.2 No. 269.1-14	Type 4-1 Component Assembly	
Nominal system voltage (U_N) [L-G] / [L-L]	127 Vac / 254 Vac	240 Vac / 480 Vac
Nominal power frequency	50 / 60 Hz	
Max. continuous operating voltage AC (MCOV) [L-G] / [L-L]	230 Vac / 460 Vac	385 Vac / 770 Vac
Nominal discharge current (I_n) (8x20µs)	20 kA	
Max. discharge current (I_{max}) (8/20)	50 kA	
Voltage Protection Rating (VPR) [L-G] / [L-L]	700 V_{pk} / 1500 V_{pk}	1200 V_{pk} / 2500 V_{pk}
Short Circuit Current Rating (SCCR)	200 kA	
Operating temperature range (T_U) °F (°C)	-31 to 185 (-35 to 85)	
Operating state / fault indication	Green = good ; Red = replace	
Wire range (60/75°C Cu, solid/stranded)	2-14 AWG (2.5-25 mm^2)	
Terminal torque — lb-in (N•m)	35-45 (4-5.1)	
Mounting	35mm DIN-Rail per EN 60715	
Enclosure material	Thermoplastic, UL 94 V0	
Protection	IP20 (finger-safe)	
Capacity	2 module(s), DIN 43880	
Agency information	UL Listed, Guide VZCA, VZCA7/CSA Component Acceptance Class 2157-27, RoHS	
Weight - oz (g)	7.94 (225)	8.57 (243)
Contact signaling		
Signaling type	Floating (dry), Form C (SPDT)	
NEC® Circuits	NEC Class 2 circuits only	
Switching capacity AC (DC)	250 V/5 A (250 V/0.1 A, 125 V/0.2 A, 75 V/0.5 A)	
Wire range (60/75 °C Cu, solid/stranded)	16-22 AWG (1.5-0.34mm^2)	
Terminal torque — lb-in (N•m)	1.8 (0.2)	

Typical installation/system application:

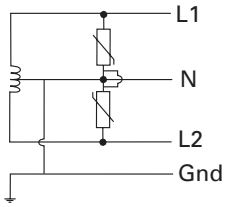

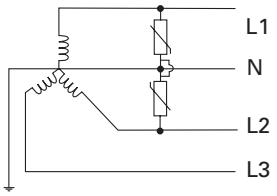

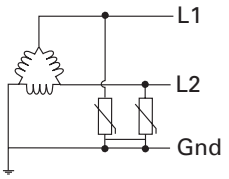

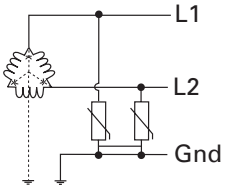

Data sheet no. 10772

3-Pole, UL Type 1 DIN-Rail high SCCR surge protective devices

RoHS 2011/65/EU

Catalog symbol:

- BSPMA3_WYGR
- BSPMA3_DLGR

Description:

The Bussmann™ series three-pole DIN-Rail UL Listed Type 1 surge protective devices feature a high 200 kA SCCR. Replaceable arrestor modules are mechanically coded with the base to ensure against installing an incorrect replacement. The unique module locking system fixes the module to the base, and allows it to be easily replaced without tools by simply depressing the release buttons.

Standard local visual status indication:

The module's visual indicator shows the protective status at a glance: green = good, red = replace.

Remote contact signaling:

The standard three-pole terminal remote Form C contact signaling relay has a floating changeover contact for use as a break or make contact, according to circuit concept.

Ratings:

- System volts/types
  - 120/208 Vac 3-phase Wye
  - 277/480 Vac 3-phase Wye
  - 347/600 Vac 3-phase Wye
  - 240 Vac 3-phase Delta
  - 480 Vac 3-phase Delta
- Short-circuit Current Rating (SCCR) 200 kA

Agency information:

- UL Listed open Type 1, ANSI/ UL 1449 4th Edition, Guide VZCA, VZCA7
- CSA Type 4-1 Component Assembly, C22.2 No. 269.1-14, Class 2157-27
- RoHS compliant

Mounting

- 35mm Din-Rail

Warranty

- Five years

Dimensions — mm

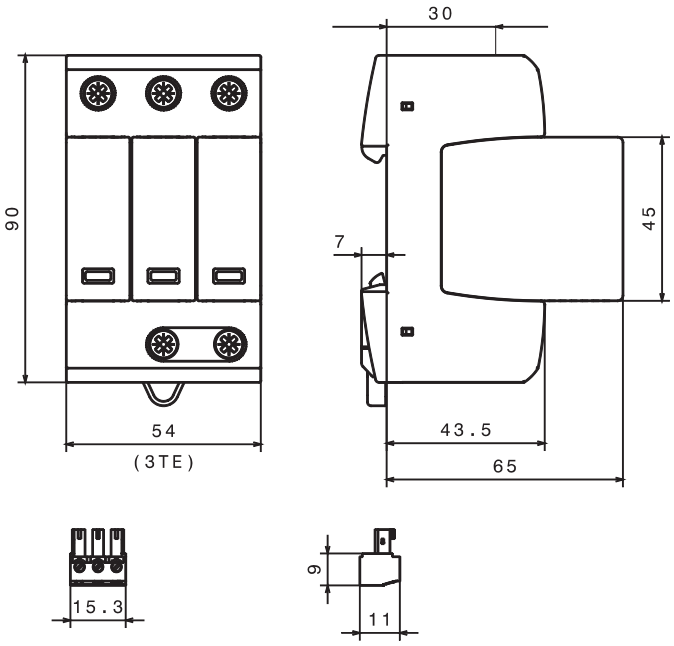

Surge protective devices

Data sheet no. 10773

Specifications/ordering information					
System voltage/type	120/208 Vac 3-phase Wye	277/480 Vac 3-phase Wye	347/600 Vac 3-phase Wye	240 Vac 3-phase Delta	480 Vac 3-phase Delta
Catalog number	BSPMA3208WYGR	BSPMA3480WYGR	BSPMA3600WYGR	BSPMA3240DLGR	BSPMA3480DLGR
Replacement module catalog number (qty.)	BPMA180UL (3)	BPMA385UL (3)	BPMA510UL (3)	BPMA275UL (3)	BPMA550UL (3)
SPD class acc. to ANSI/UL 1449 4th Ed.	Open-Type 1 SPD				
SPD class acc. to CSA - C22.2 No. 269.1-14	Type 4-1 Component Assembly				
Nominal system voltage (U_N) [L-G] / [L-L]	120 Vac / 208 Vac	277 Vac / 480 Vac	347 Vac / 600 Vac	240 Vac / 240 Vac	480 Vac / 480 Vac
Nominal power frequency	50 / 60 Hz				
Max. continuous operating voltage AC (MCOV) [L-G] / [L-L]	180 Vac / 360 Vac	385 Vac / 770 Vac	510 Vac / 1020 Vac	275 Vac / 550 Vac	550 Vac / 1100 Vac
Nominal discharge current (I_n) (8x20µs)	20 kA				
Max. discharge current (I_{max}) (8/20)	50 kA				
Voltage Protection Rating (VPR) [L-G] / [L-L]	600 V_{pk} / 1200 V_{pk}	1200 V_{pk} / 2500 V_{pk}	1500 V_{pk} / 3000 V_{pk}	800 V_{pk} / 1500 V_{pk}	1800 V_{pk} / 3000 V_{pk}
Short Circuit Current Rating (SCCR)	200 kA				
Operating temperature range (T_U) °F (°C)	-31 to 185 (-35 to 85)				
Operating state / fault indication	Green = good ; Red = replace				
Wire range (60/75°C Cu, solid/stranded)	4-14 AWG (2.5-25 mm^2)				
Terminal torque	35-45 (4-5.1)				
Mounting	35 mm DIN-Rail per EN 60715				
Enclosure material	Thermoplastic, UL 94 V0				
Protection	IP20 (finger-safe)				
Capacity	3 module(s), DIN 43880				
Agency information	UL Listed, Guide VZCA, VZCA7/CSA Component Acceptance Class 2157-27, RoHS				
Weight - oz (g)	10.93 (310)	12.24 (347)	13.05 (370)	11.46 (325)	13.4 (380)
Contact signaling					
Signaling type	Floating (dry), Form C (SPDT)				
NEC Circuits	NEC Class 2 circuits only				
Switching capacity AC (DC)	250 V/5 A (250 V/0.1 A, 125 V/0.2 A, 75 V/0.5 A)				
Wire range (60/75°C Cu, solid/stranded)	16-22 AWG (1.5-0.34mm^2)				
Terminal torque - lb-in (N•m)	1.8 (0.2)				

Typical installation/system application:

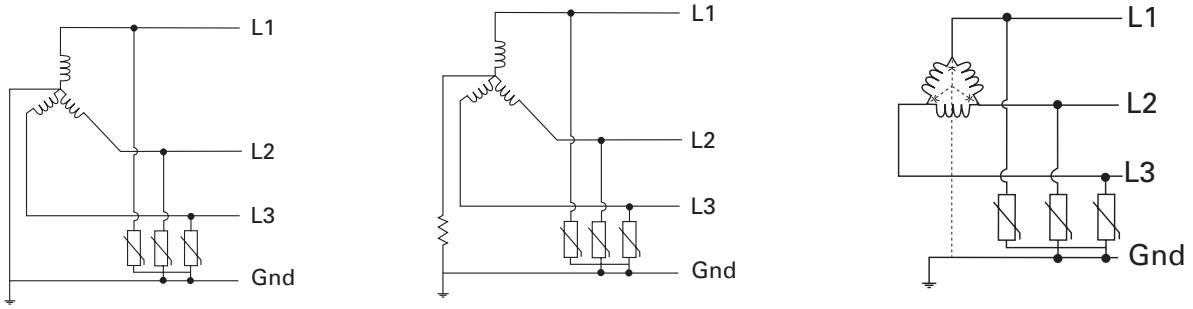

Data sheet no. 10773

4-Pole, UL Type 1 DIN-Rail high SCCR surge protective devices

RoHS 2011/65/EU

Dimensions — mm

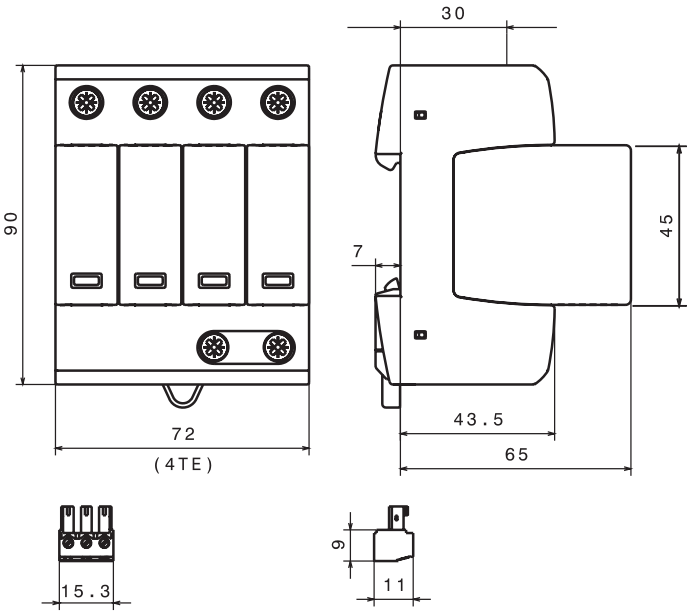

Catalog symbol:

- BSPMA4_WYNGR

Description:

The Bussmann™ series four-pole DIN-Rail UL Listed Type 1 surge protective devices feature a high 200 kA SCCR. Replaceable arrestor modules are mechanically coded with the base to ensure against installing an incorrect replacement. The unique module locking system fixes the module to the base, and allows it to be easily replaced without tools by simply depressing the release buttons.

Standard local visual status indication:

The module's visual indicator shows the protective status at a glance: green = good, red = replace.

Remote contact signaling:

The standard three-pole terminal remote Form C contact signaling relay has a floating changeover contact for use as a break or make contact, according to circuit concept.

Ratings:

- System volts/types
  - 120/208 Vac 3-phase Wye
  - 277/480 Vac 3-phase Wye
- Short-circuit Current Rating (SCCR) 200 kA

Agency information:

- UL Listed open Type 1, ANSI/ UL 1449 4th Edition, Guide VZCA, VZCA7
- CSA Type 4-1 Component Assembly, C22.2 No. 269.1-14, Class 2157-27
- RoHS compliant

Mounting

- 35mm Din-Rail

Warranty

- Five years

Data sheet no. 10774

Specifications/ordering information	System volts/catalog no.	
System voltage/type	120/208 Vac 3-phase Wye	277/480 Vac 3-phase Wye
Catalog number	BSPMA4208WYNGR	BSPMA4480WYNGR
Replacement module catalog number (qty.)	BPMA180UL (4)	BPMA385UL (3), BPMA180UL (1)
SPD class acc. to ANSI/UL 1449 4th Ed.	Open-Type 1 SPD	
SPD class acc. to CSA - C22.2 No. 269.1-14	Type 4-1 Component Assembly	
Nominal system voltage (U_N) [L-N] / [L-G] / [L-L] / [N-G]	120 Vac / 120 Vac / 208 Vac / 0 Vac	277 Vac / 277 Vac / 480 Vac / 0 Vac
Nominal power frequency	50 / 60 Hz	
Max. continuous operating voltage AC (MCOV) [L-N] / [L-G] / [L-L] / [N-G]	180 Vac / 360 Vac / 360 Vac / 180 Vac	385 Vac / 565 Vac / 770 Vac / 180 Vac
Nominal discharge current (I_n) (8x20µs)	20 kA	
Max. discharge current (I_{max}) (8/20)	50 kA	
Voltage Protection Rating (VPR) [L-N] / [L-G] / [L-L] / [N-G]	600 V_{pk} / 1200 V_{pk} / 1200 V_{pk} / 600 V_{pk}	1200 V_{pk} / 1800 V_{pk} / 2500 V_{pk} / 600 V_{pk}
Short Circuit Current Rating (SCCR)	200 kA	
Operating temperature range (T_U) °F (°C)	-31 to 185 (-35 to 85)	
Operating state / fault indication	Green = good ; Red = replace	
Wire range (60/75°C Cu, solid/stranded)	4-14 AWG (2.5-25 mm^2)	
Terminal torque — lb-in (N•m)	35-45 (4-5.1)	
Mounting	35 mm DIN-Rail per EN 60715	
Enclosure material	Thermoplastic, UL 94 V0	
Protection	IP20 (finger-safe)	
Capacity	4 module(s), DIN 43880	
Agency information	UL Listed, Guide VZCA, VZCA7/CSA Component Acceptance Class 2157-27, RoHS	
Weight - oz (g)	13.9 (394)	15.24 (432)
Contact signaling		
Signaling type	Floating (dry), Form C (SPDT)	
NEC Circuits	NEC Class 2 circuits only	
Switching capacity AC (DC)	250 V/5 A (250 V/0.1 A, 125 V/0.2 A, 75 V/0.5 A)	
Wire range (60/75°C Cu, solid/stranded)	16-22 AWG (1.5-0.34mm^2)	
Terminal torque - lb-in (N•m)	1.8 (0.2)	

Typical installation/system application:

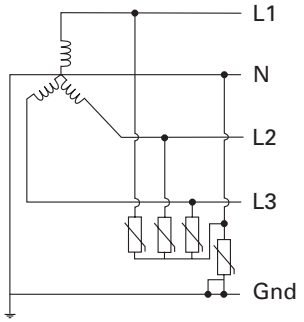

Data sheet no. 10774

BSPM1A_ _ _ _LV(R) low voltage power SPDs

The Bussmann series UL Type 4, 75 Vac/100 Vdc, 120 Vac/200 Vdc single pole, modular surge arresters feature local, *easy*ID™ visual indication and remote contact signaling. The unique module locking system fixes the protection module to the base part. Modules can be easily replaced without tools by simply depressing the release buttons. Integrated mechanical coding between the base and protection module ensures against installing an incorrect replacement module.

LV power system arresters

The features of these single-pole devices are for use as a single device or in combination with other devices for AC and DC voltage systems.

- Surge arrester according to UL 1449 4th Edition, Type 4 Component Assembly for use in Type 2 applications helps meet UL 508A requirements*
- Proven MOV technology for reliable surge protection
- "Thermo Dynamic Control" SPD monitoring device ensures high reliability against surge events
- Module locking system with module release button make module replacement easy without tools
- Remote signaling of all protection modules make status monitoring easy and accurate in any monitoring scheme
- No additional upstream overcurrent protection necessary to make installation easier and more economical
- Vibration and shock tested according to EN 60068-2 to withstand harsh environments

* Except as noted in data sheet no. 2056.

Remote signaling Form C contact

The remote signaling contact versions have a floating changeover contact for use as a break or make contact for easy adoption in any monitoring application.

Dimensions — mm

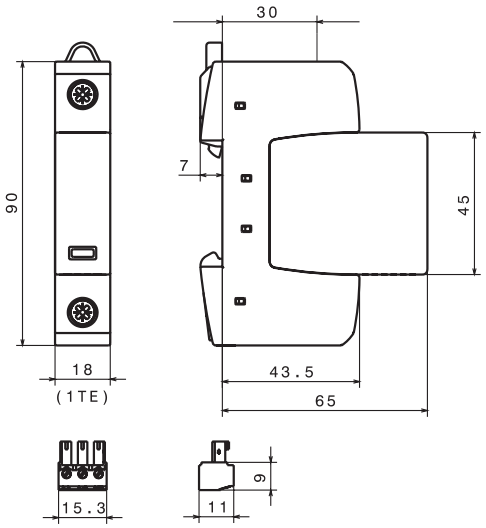

Catalog numbers and specifications

Ordering information — for 75 Vac/100 Vdc to 120 Vac/200 Vdc		System volts/catalog no.	
System voltage		75 Vac/100 Vdc	120 Vac/200 Vdc
Catalog no. (base + modules)	With remote signaling	BSPM1A75D100LVR	BSPM1A150D200LVR
Replacement modules		BPMA75D100LV	BPMA150D200LV
Specifications			
Max. continuous operating AC voltage [V_C]		75 Vac	150 Vac
Voltage protection level [VPL]		≤0.4 kV	≤0.7 kV
Voltage protection level at 5 kA [VPL]		≤0.35 kV	≤0.55 kV
Max. continuous operating DC voltage [V_C]		100 Vdc	200 Vdc
Nominal discharge current (8/20µs) [I_n] AC		10 kA	15 kA
Nominal discharge current (8/20µs) [I_n] DC		10 kA	12.5 kA
Surge current capacity(8/20µs) [I_{max}]		40 kA	40 kA
Temporary overvoltage (TOV)		90 V / 5 sec.	175 V / 5 sec.
Agency information*		UL / cUL, CSA, KEMA	UL / cUL, CSA, KEMA
Specifications — all catalog numbers			
SPD according to EN 61643-11		Type 2	
SPD according to IEC 61643-1		Class II	
Response time [t_A]		≤25ns	
TOV characteristics		Withstand	
Operating temperature range [T_U]		-40°C to +80°C	
Operating state/fault indication		Green (good) / red (replace)	
Number of ports		1	
Cross-sectional area (minimum)		14 AWG solid/stranded	
Cross-sectional area (maximum)		1 AWG solid — 2 AWG stranded	
Mounting		35mm DIN-Rail per EN 60715	
Enclosure material		Thermoplastic, UL 94V0	
Location category		Indoor	
Degree of protection		IP20	
Capacity		1 module, DIN 43880	
Warranty		Five years**	
Remote contact signaling			
Remote contact signaling type		Changeover contact	
AC switching capacity (volts/amps)		250 V/0.5 A	
DC switching capacity (volts/amps)		250 V/0.1 A; 125 V/0.2 A; 75 V/0.5 A	
Conductor ratings / cross-sectional area for remote contact signal terminals		60/75°C Max. 14 AWG solid/stranded	
Ordering information		Order from catalog numbers above	

* Agency information not applicable to DC ratings.
**See Limited Warranty Statement 3A1502 for details at Eaton.com/bussmannseries.

Data sheet no. 2056

BSPH2A_ _ _ _LVR low voltage control SPDs

The Bussmann series UL Type 4 24 Vac/dc, 48 Vac/dc, 60 Vac/dc, 120 Vac/dc and 230 Vac/dc, two-pole, modular surge arresters feature local, *easy*ID visual indication and remote contact signaling. The unique module locking system fixes the protection module to the base part. Modules can be easily replaced without tools by simply depressing the release buttons. Integrated mechanical coding between the base and protection module ensures against installing an incorrect replacement module.

LV system arresters

The features of these two-pole devices are for use in coordination with other upstream SPDs in UL 508A Applications*.

- Surge arrester according to UL 1449 4th Edition, Type 4 Component Assembly for use in Type 3 applications helps meet UL 508A requirements
- Proven MOV and GDT hybrid technology for reliable surge protection
- "Thermo Dynamic Control" SPD monitoring device ensures high reliability against surge events
- Module locking system with module release button make module replacement easy without tools
- Remote signaling on all protection modules make status monitoring easy and accurate in any monitoring scheme
- No additional upstream overcurrent protection needed so installation is easier and more economical
- Vibration and shock tested according to EN 60068-2 to withstand harsh environments

* UL 1449 4th Edition not applicable to DC voltages.

Remote signaling Form C contact

Remote signaling has a floating changeover contact for use as a break or make contact for easy application in any monitoring system.

Dimensions — mm

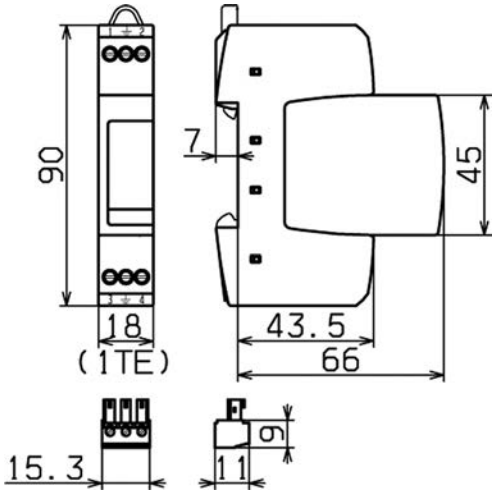

Catalog numbers and specifications

Ordering information	System volts/catalog no.		
System voltage	24 Vac/dc	48 Vac/dc	120 Vac/dc
Max. continuous operating AC voltage (MCOV) [V_C]	30 Vac/dc	60 Vac/dc	150 Vac/dc
Catalog no.(base + modules)	BSPH2A24D24LVR	BSPH2A48D48LVR	BSPH2A150D150LVR
Replacement Modules	BPHA24D24LV	BPHA48D48LV	BPHA150D150LV
Specifications			
Nominal AC voltage [V_o]	24 V	48 V	120 V
Max. continuous operating AC voltage [V_C]	30 V	60 V	150 V
Max. continuous operating DC voltage [V_C]	30 V	60 V	150 V
Nominal discharge current (8/20µs) [I_n]	1 kA	1 kA	2 kA
Total discharge current (8/20µs) [L+N-Gnd] [I_{total}]	2 kA	2 kA	4 kA
Nominal load current AC [I_L]	25 A	25 A	25 A
Combined impulse [U_{OC}]	2 kV	2 kV	4 kV
Combined impulse [L+N-Gnd] [U_{OC} total]	4 kV	4 kV	8 kV
Voltage protection level [L-N] [VPL]	≤180 V	≤350 V	≤640 V
Voltage protection level [L/N-Gnd] [VPL]	≤630 V	≤730 V	≤800 V
SPD according to EN 61643-11	Type 3		
SPD according to IEC 61643-1	Class III		
Response time [L-N] [t_A]	≤25ns		
Response time [L/N-Gnd] [t_A]	≤100ns		
Operating temperature range [T_U]	-40°C to +80°C		
Operating state/fault indication	Green (good) / red (replace)		
Number of ports	1		
Cross-sectional area (min.)	18 AWG solid/stranded		
Cross-sectional area (max.)	10 AWG solid/12 AWG stranded		
For mounting on	35mm DIN-Rail per EN 60715		
Enclosure material	Thermoplastic, UL 94V0		
Location category	Indoor		
Degree of protection	IP20		
Capacity	1 Module, DIN 43880		
Agency information*	UL / cUL, CSA, KEMA		
Product warranty	Five years**		
Remote contact signaling			
Remote contact signaling type	Changeover contact		
AC switching capacity (volts/amps)	250 V/0.5 A		
DC switching capacity (volts/amps)	250 V/0.1 A; 125 V/0.2 A; 75 V/0.5 A		
Conductor ratings and cross-sectional area for remote contact signal terminals	60/75°C Max. 14 AWG solid/stranded		
Ordering information	Order from catalog numbers above		

* Agency information not applicable to DC ratings.
**See Limited Warranty Statement 3A1502 for details at Eaton.com/bussmannseries.

Data sheet no. 2057

BSPD48RJ45 DIN-Rail RJ45/Ethernet cable SPD

The Bussmann series DIN-Rail mount BSPD48RJ45 Surge Protective Device (SPD) is a UL Listed 497B universal DIN-Rail mount surge protective device for RJ45/Ethernet cable systems. It is easy to install or retrofit Ethernet cable systems with RJ connectors.

The BSPD48RJ45 is installed between the patch panel and the active component (a switch for example). The snap-in mechanism of the supporting foot allows the SPD to be safely grounded via the DIN-Rail. For single applications, the BSPD48RJ45 comes with a supplied mounting bracket with cable lug.

Fulfilling the requirements of Category 6, the BSPD48RJ45 can be universally used for all data services up to nominal voltages of 48 V. It is well suited for existing services such as Gigabit Ethernet, ATM, ISDN, Voice over IP and Power over Ethernet (PoE+ acc. to IEEE 802.3at up to 57 V) and similar applications in structured cabling systems according to Class E up to 250 MHz. Protection of all pairs by means of powerful gas discharge tubes and one adapter filter matrix per pair.

- UL 497B Listed
- Easy to install or retrofit for protection of all lines
- CAT 6 according to ISO/IEC 11801
- CAT 6 in the channel (Class E)
- Power over Ethernet (PoE+ according to IEEE 802.3at)

DIN-Rail RJ45 SPDs applications

Catalog no.	BSPD48RJ45
Bus systems, and measuring and control technology	
Industrial Ethernet	X
Data networks	
ATM	X
Ethernet 10/100/1000	X
FDDI, CDDI	X
Industrial Ethernet	X
Power over Ethernet (PoE)	X
Token Ring	X
VG any LAN	X
Video systems	
Video (2 wire)	X

Dimensions — mm

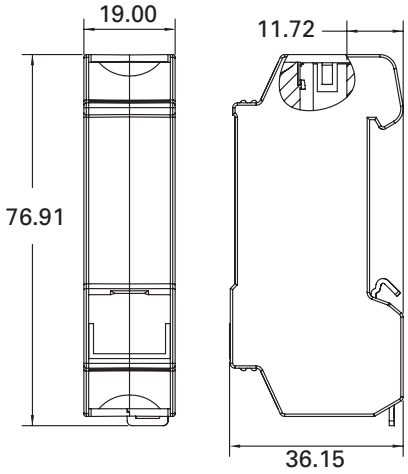

Catalog numbers and specifications

Catalog no.	BSPD48RJ45
Nominal voltage (U_N)	48 V
Max. continuous operating DC voltage (U_C)	48 V
Max. continuous operating AC voltage (U_C)	34 V
Max. continuous DC voltage pair-pair (PoE) (U_C)	57 V
Nominal current (I_L)	1 A
C2 Nominal discharge current (8/20µs) line-line (I_n)	150 A
C2 Nominal discharge current (8/20µs) line-PG (I_n)	2.5 kA
C2 Total nominal discharge current (8/20µs) line-PG (I_n)	10 kA
C2 Nominal discharge current (8/20µs) pair-pair (PoE) (I_n)	150 A
Voltage protection level line-line for In C2 (U_P)	≤190 V
Voltage protection level line-PG for In C2 (U_P)	≤600 V
Voltage protection level line-line for In C2 (PoE) (U_P)	≤600 V
Voltage protection level line-line at 1 kV/µs C3 (U_P)	≤180 V
Voltage protection level line-PG at 1 kV/µs C3 (U_P)	≤500 V
Voltage protection level pair-pair at 1 kV/µs C3 (PoE) (U_P)	≤600 V
Insertion loss at 250MHz	≤3 dB
Capacitance line-line (C)	≤30pF
Capacitance line-PG (C)	≤25pF
Operating temperature range	-40°C to +80°C
Degree of protection	IP10
Mounting	35mm DIN-Rail per EN 60715
Connection (input / output)	RJ45 socket / RJ45 socket
Pinning	1 / 2, 3 / 6, 4 / 5, 7 / 8
Grounding	Via 35mm DIN-Rail per EN 60715
Enclosure material	Die cast zinc
Color	Bare surface
Test standards	IEC 61643-21 / EN 61643-21
Agency information	UL 497B
Warranty	Five years*

* See Limited Warranty Statement 3A1502 for details at Eaton.com/bussmannseries.

BSPD_DING_ DIN-Rail 4 wire SPDs

The Bussmann series universal four-pole, DIN-Rail mounted surge arrester is UL Listed 497B DIN-Rail mount universal surge protective device. It requires minimum space, while providing effective protection for the stringent requirements of measuring and control circuits, and bus systems.

To ensure safe operation, the arrester provides protection against vibration and shock up to a 30-fold acceleration of gravity. The device's function-optimized design allows quick and easy protection module removal via "make-before-break" terminals that assure data signal continuity in the protected and unprotected state.

For IEC Applications - Instruction for Surge Protective Device Use In Zone 2 Explosive Atmospheres per ATEX.

1. When installed in potentially explosive atmospheres, the Data Signal SPD shall be installed into an enclosure which meets the requirements of a recognized type of protection, in accordance with EN 60079-0.
2. The Data Signal DIN SPD as transient suppressor. This approval applies to the following equipment types:
   - BSPD5DINLHF

Ambient and temperature class

- -40°C to 80°C, T4: DEKRA 12ATEX0254 X: II 3 G Ex nA IIC T4 Gc
- Standards used for: ATEX: EN60079-0: 2009, EN 60079-15: 2005

- UL 497B Listed
- Function-optimized design for safe use and easy installation
- Four-pole and base mounts on grounded 35mm DIN-Rail
- Module removal without signal interruption via "make-before-break" circuitry

Dimensions — mm

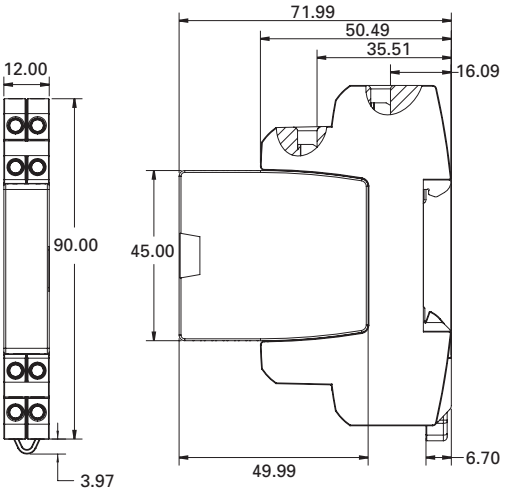

DIN-Rail universal 4 wire data signal SPD applications

Universal 4 wire data signal SPD is specified by communication technology.

The table below contains the specific technology to which the BSPD5DINLHF is suited to be used.

System type
Bus systems and measuring, and control technology
CAN-Bus (data line only)
C-Bus (Honeywell)
Device Net (data line only)
FSK
IEC-Bus (RS485)
Interbus INLINE,
LON - TP/XF 78
MODBUS
MPI Bus
Procontic T200 (RS422)
PROFIBUS DP/FMS
PROFIBUS SIMATIC NET
PSM EG RS422 & RS485
Rackbus (RS485)
R Bus
RS 485
RS422, V11
SafetyBUS p
Securilan LON Bus
SUCONET

The table below contains the specific technology to which the BSPD24DING is suited to be used.

System type
Bus systems and measuring, and control technology
0-20mA, 4-20mA signals
Binary signals
TTYy 4-20mA

Data sheet no. 2161

Catalog numbers and specifications

Catalog number	BSPD24DING	BSPD5DINLHF
Nominal voltage (U_N)	24 V	5 V
Nominal current at 45°C (I_L)	0.75 A	1.0 A
VPL line-line for limp D1 (U_p)	≤102 V	≤25 V
VPL line-PG for limp D1 (U_p)	≤66 V	≤550 V
VPL line-line at 1 kV/µs C3 (U_p)	≤90 V	≤11 V
VPL line-PG at 1 kV/µs C3 (U_p)	≤45 V	≤550 V
D1 Total lightning impulse current (10/350 µs) (I_{imp})	10 kA	10 kA
D1 Lightning impulse current (10/350 µs) per line (I_{imp})	2.5 kA	2.5 kA
C2 Total nominal discharge current (8/20µs) (I_n)	20 kA	20 kA
C2 Nominal discharge current (8/20µs) per line (I_n)	10 kA	10 kA
Series impedance per line	1.8 Ω	1.0 Ω
Max. continuous operating DC voltage (U_C)	33 V	6 V
Max. continuous operating AC voltage (U_C)	23.3 V	4.2 V
Cut-off frequency line-PG (f_G)	6.8 MHz	100 MHz
Capacitance line-line (C)	≤0.5 nF	≤25 pF
Capacitance line-PG (C)	≤1.0 nF	≤16 pF
ATEX Approvals	†	†
Agency information	††	††
IEC 61643-21 test category	D1, C2, C3	
Operating temperature range	-40°C to +80°C	
Degree of protection	IP20	
For mounting on	35mm DIN-Rails per EN 60715	
Grounding	Via base part	
Color / enclosure material	Grey / Polyamide PA 6.6	
Test standards	IEC 61643-21 / EN 61643-21, UL 497B	
Connection (input / output)	Screw terminal	
Conductors	Solid: 12-28 AWG (4-0.08 mm²)	
	Flexible: 14-28A WG (2.5-0.08 mm²)	
Terminal torque	3.5 Lb-In (0.4 N•m)	
Warranty	5 Years*	

* See Bussmann series SPD Limited Warranty Statement (3A1502) for details at Eaton.com/bussmannseries.
† DEKRA 12ATEX0254 X: II 3 G Ex nA IIC T4 Gc.
††ATEX, UL, CSA.

The power of space

The revolutionary **Bussmann™ series Low-Peak™ CUBEFuse™** delivers the smallest footprint compared to any Class J, RK or T fuse solution — requiring up to 70% less space when combined with its unique fuse holder or UL® 98 Listed Compact Circuit Protector.

Freeing up space is powerful. And the CUBEFuse does just that, while packing a 300 kA interrupting rating and enabling higher panel SCCR. Plus, it features plug-in capability for easier installation.

What will you do with all that space?

CUBEFuse.com
The evolution continues. 2018.

EATON
Powering Business Worldwide

Circuit protection for telecom applications

Complete portfolio of Bussmann series fuses, disconnects and holders specifically designed for telecom applications

Contents

Description	Poles	Volts DC	Amps	Section page
Fused pullout disconnects and related fuses				
Compact TPCDS with TCP fuses	1	80	3-125	2
Miniature TPMDS with TPM fuses	1	80	3-30	3
TP1590-4 for TPA fuses	4	145/80	40/50	4
TP15914 for TPA fuses	4	145	50	
TPA (170 Vdc) and TPA-B (65 Vdc) fuses	—	170/65	3-40	5
15800 for TPS fuses and GMT-A open fuse indicator	1	60	3-70	
TPS fuses and TP158HC for TPL-B power fuses and GMT-A open fuse indicator	1	80	70-250	6
15100 for TPL fuses	1	60	70-800	7
TPHCS for TPL fuses	1	80	70-800	
TPL fuses	—	170	70-800	8
Fuses and fuse holders				
TPN current-limiting DC fuses	—	170	1-600	9
70 Type indicating fuses	—	125 AC 300 DC	1/10-10	10
15087 holders for 70 Type fuses	1	300	12	
HLS, HLT and PCT holders for GMT fuses	Up to 25	125 AC 60 DC	15	11
GMT fast-acting fuses	—	125 AC 60 DC	18/100 to 3	
GMT-A fast-acting open fuse indicator for use with 15800 and TP158HC disconnects				

TPC fuses and TPCDS pullout disconnects

Telpower TPC compact current-limiting fuses mount in the TPCDS compact fused pullout disconnect that's available in two disconnect profiles and a variety of terminal styles. Recommended 0.75" center-to-center product spacing.

Ratings

- Volts 80 Vdc
- Amps 3-125 A
- IR 100 kA

Agency information

- UL Recognized (investigated to UL 1801) as a disconnect switch for the interruption of load current by means of withdrawing the fuse pullout
- Recognized to US and Canadian requirements under the component recognition program of Underwriters Laboratories Inc. Files E219046 and E56412
- CE

Typical applications

- Telecommunications DC power circuit protection
- Replacement of DC telecom circuit breakers
- Applications where venting of arc or molten metals and gases during opening would pose a problem to surrounding devices

Features

- Highest interrupting rating (100 kA) available and complete system coordination for DC circuit protection for compact footprint providing a superior protection solution for replacement of existing DC telecom circuit breakers
- AmpColor ID™ system makes fuse replacement easy
- Local and remote open fuse indication. Local alarm indication provided by LED on TPC fuse
- Remote alarm terminal available in three positions common to DC circuit protection devices

TPC fuses

Catalog no. (amps)			
TPC-3	TPC-8	TPC-25	TPC-75
TPC-4	TPC-10	TPC-30	TPC-90
TPC-5	TPC-12	TPC-40	TPC-100
TPC-6	TPC-15	TPC-50	TPC-125
TPC-7	TPC-20	TPC-60	

TPCDS catalog number system

Catalog no. prefix			
TPCDS-		TPCDS-D-	
Terminal style		Terminal style	
BB -	Bullet contact on the line, bullet contact on the load	CC -	Screw Clamp terminal on the line, screw Clamp terminal on the load
BS -	Bullet contact on the line, stud terminal on the load	BC -	Bullet contact on the line, screw Clamp terminal on the load
SS -	Stud terminal on the line, stud terminal on the load	SEC -	Stud terminal on the line, English threads for stud (10-32), screw Clamp terminal on the load
—		SMC -	Stud terminal on the line, metric threads for stud (M5), screw Clamp terminal on the load
Thread		N/A	
M -	Metric threads for panel mount fasteners (M3) and stud (M5)	—	
E -	English threads for panel mount fasteners (6-32) and stud (10-32)		
Remote alarm terminal distance		Remote alarm terminal distance	
1 -	0.645 inch from line terminal	1 -	Side ouput (available on CC and BC terminal styles)
2 -	0.970 inch from line terminal	2 -	Bottom output, .970 inch from line terminal (available on BC terminal style only)
3 -	1.285 inch from line terminal	—	

Catalog no.			
TPCDS-BBE-1	TPCDS-BSE-2	TPCDS-SSE-3	TPCDS-D-SEC1*
TPCDS-BBE-2	TPCDS-BSE-3	TPCDS-SSM-1	TPCDS-D-SEC2*
TPCDS-BBE-3	TPCDS-BSM-1	TPCDS-SSM-2	TPCDS-D-SMC1*
TPCDS-BBM-1	TPCDS-BSM-2	TPCDS-SSM-3	TPCDS-D-SMC2*
TPCDS-BBM-2	TPCDS-BSM-3	TPCDS-D-BC1*	
TPCDS-BBM-3	TPCDS-SSE-1	TPCDS-D-BC2*	
TPCDS-BSE-1	TPCDS-SSE-2	TPCDS-D-CC1*	

* Not investigated to Canadian requirements.

Dimensions

- See data sheet no. 5023

Data sheet no. 5023

TPM fuse and TPMDS pullout disconnect

Telpower TPM miniature current-limiting fusses mount in the miniature TPMDS pullout disconnect. The TPM fuses feature local open fuse indication and TPMDS is easily integrated into remote indication systems.

Ratings

- Volts 80 Vdc
- Amps 3-30 A
- IR 20 kA

Agency information

- UL Recognized (investigated to UL 1801) as a disconnect switch for the interruption of load current by means of withdrawing the fuse pullout
- Recognized to US and Canadian requirements under the component recognition program of Underwriters Laboratories Inc. Files E219046 and E56412
- CE

Typical applications

- Telecommunications DC power circuit protection
- Applications with restricted space, or mounting in 1 U (1.75"/44.5mm) panels

Features

- Smallest and most versatile fused disconnect switch available allowing for assembly into 1 U (1.75"/44.5mm) panel. Easy to connect:
  - Load: 1/4" quick-connect or bolted connection with 10-32 (M5) captive nut
  - Line: 1/4" quick-connect or screw connection with clearance hole for #10 (M5) bolt
- AmpColor ID™ System makes fuse replacement easy
- Switch design provides for easy panel mounting by single captive 4-40 (M3) nut and panel notch integral to switch footprint
- Complete system coordination capability with local and remote open fuse indication. Local alarm indication provided by LED on TPM fuse (maximum alarm circuit current: 20 mA)

TPM fuses

Catalog no. (amps)			
TPM-3	TPM-6	TPM-10	TPM-20
TPM-4	TPM-7	TPM-12	TPM-25
TPM-5	TPM-8	TPM-15	TPM-30

TPMDS pullout disconnects (accept all TPM fuse amp ratings)

Catalog no.	Description
TPMDS-E	Pullout fused disconnect, English hardware
TPMDS-M	Pullout fused disconnect, metric hardware

Dimensions — see data sheet no. 5022

TPMDS alarm schematic

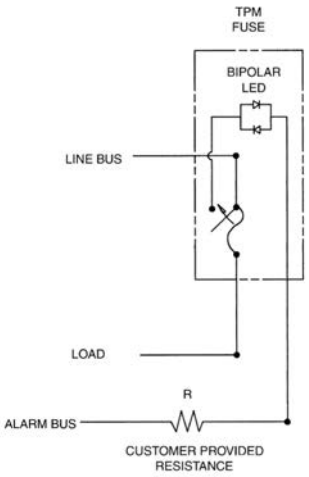

Notes:

1. The resistance (R) must be provided by the end-user to limit the open fuse indication output current to a maximum of 20mA. The "R" value should be calculated using the system voltage value. If remote indication functionality is not required, the END-USER CIRCUITRY must still be supplied to provide a resistance path to the return for the local indication to properly function.
2 The fuse is polarized to maintain proper orientation with the switch housing. The line and load terminals are identified on the switch housing.

Data sheet no. 5022

TP15900-4 fused pullout disconnect for TPA fuses

4-pole fused pullout disconnect for use with Telpower TPA and TPA-B fuses. Pullout disconnects feature remote open fuse indication capability.

Ratings

- Volts
  - 145 Vdc@40 A per pole
  - 80 Vdc@50 A per pole

Agency information

- UL Recognized File E97649 as a disconnect switch for interruption of load current by means of withdrawing the fuse carrier
- UL Recognized as a component for telecommunication power distribution equipment (UL category QPQY2)
- UL Recognized fuses for branch circuit protection
- CSA Component Acceptance for the system
- CE

Typical applications

- Telecommunications DC power circuit protection

Features

- Easy installation, connects directly to busbar, reduces external wiring per pole. Rear accessibility for line and load terminations
- LED alarm signaling (LED current 30 mA max)
- Local and remote open-fuse indication along with fuse orientation rejection feature and fuse presence indication
- Alarm test probe point allows on-site alarm circuit checking

Catalog no.	Description
TP15900-4	4-pole common disconnect
TP15900-41	4-pole common disconnect w/ split alarm, split line

Available fuses

Catalog symbol	Amps	Volts DC	IR
TPA	3, 5, 10, 15, 20, 25, 30, 40, 50	170	100 kA
TPA-B	20, 25, 30	65	20 kA

Accessories

- Spare fuse holders: catalog numbers 5TPH and TPSFH-AS

Dimensions — mm (in)

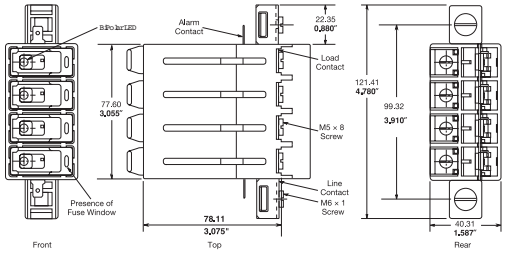

Data sheet no. 5001

TP15914 fused pullout disconnect

Modular 4-pole fused pullout disconnect for us with TPA fuses. 4-poles per module can be ganged up to four modules for a total of 16 poles. The TP15914 features open fuse indication and fuse presence indication along with fuse orientation rejection.

Ratings

- Volts 145 Vdc
- Amps 50 A max per pole

Agency information

- UL Recognized, Guide JFHR2, File E56412
- UL Recognized as a disconnect switch for interruption of load current by means of withdrawing the fuse carrier
- UL Recognized as a component for telecommunication power distribution equipment (UL category QPQYZ)
- UL Recognized fuses for branch circuit protection
- CSA Certified, Class 1422-30, File 53787
- CSA Component Acceptance for the system

Typical applications

- Telecommunications DC power circuit protection

Features

- Easy installation with totally enclosed module that connects directly to busbar to reduce external per-pole wiring.
- Standard front access load and line double lug connection for 8 AWG wire
- LED alarm signaling (LED current 30 mA max)
- Remote alarm with alarm test probe point to allow on-site alarm circuit checking

Catalog no.	Description
TP15914	English hardware
TP15914-1	Metric hardware

Accessories

- Spare fuse holders: catalog numbers 5TPH and TPSFH-AS

Dimensions — mm (in)

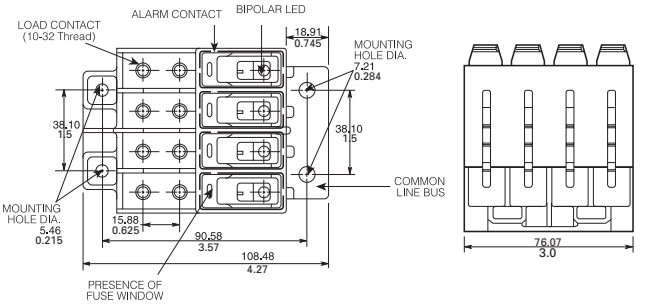

Data sheet no. 5011

TPA and TPA-B indicating fuses

Indicating DC power distribution fuse for use in TP15900-4 and TP15914 fused pullout disconnects.

RoHS 2011/65/EU

Ratings

- Volts
  - 170 Vdc (TPA)
  - 65 Vdc (TPA-B)
- Amps
  - 3-50 A (TPA)
  - 20-30 A (TPA-B)
- IR
  - 100 kA (TPA)
  - 20 kA (TPA-B)

Agency information

- UL Recognized, Guide JFHR2, File E56412
- CSA Certified, Class 1422-30, File 53787
- CE, RoHS compliant

Typical applications

- Telecommunications DC power circuit protection

Features

- Indication pin provides for local and remote indication when used with Bussmann series TP15900-4 and TP15914 disconnect switches
- Patented "orange ring" fuse orientation features assures correct fuse position
- The UL Recognized ratings and current-limiting capability make this fuse ideal for cable protection on existing DC power distribution systems
- A unique blue label is used on all Telpower fuses to designate their DC capability

Catalog no. (amps)				
170 Vdc				
TPA-3	TPA-10	TPA-20	TPA-30	TPA-50
TPA-5	TPA-15	TPA-25	TPA-40	
65 Vdc				
TPA-B-20	TPA-B-25	TPA-B-30		

Accessories

- Spare fuse holders: 5 position holder; 5TPH; 6 position holder; TPSFH-AS

Dimensions — in (mm)

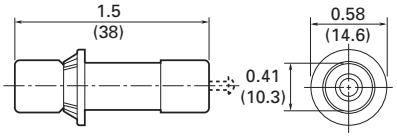

15800 fused pullout disconnect for the TPS fuse

Fused pullout disconnect switch for use only with the TPS main fuses (1 to 70 amp) and GMT-A indicating fuse (see page 14-11). It is recommend to also use the GMT-X cover for the GMT-A fuse.

Ratings

- Volts 60 Vdc
- Amps 3-70 A
- SCCR 100 kA

Agency information

- UL Recognized, Guide QPQY2, File E97649
- CE

Typical applications

- Telecommunications DC power circuit protection

Features

- Alarm output with wire wrap terminal or connection to 0.063" thick common alarm bus
- Spare alarm and power fuse compartment
- Mounting hardware included

Catalog no.	Description
15800-R-200	Rear access panel mounting
15800-F-200	Front access panel mounting

Accessories

- Spare fuse holders: catalog numbers TPSFH-AS (TPS fuses) and TPSFH-T (GMT fuses)

Dimensions — in (mm)

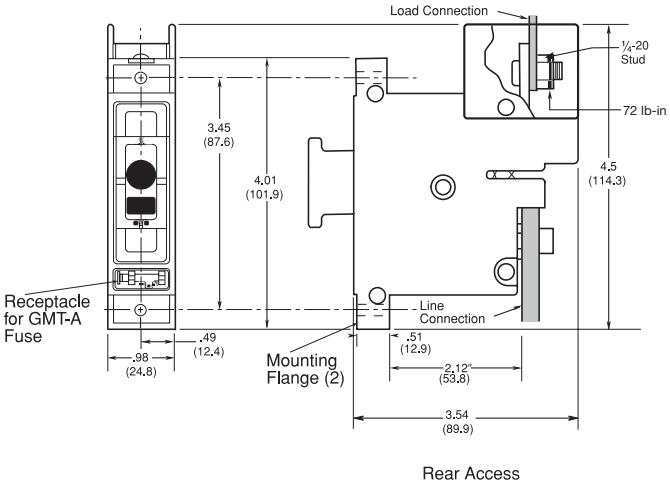

TPS main power fuse

Non-indicating DC power distribution ferrule fuses specifically designed to meet the unique needs of DC power distribution systems. For use with Bussmann series 15800 fused pullout disconnect. Vertical and horizontal PCB tab versions available for circuit board applications.

Ratings

- Volts 170 Vdc
- Amps 1-80 A
- IR 100 kA

Agency information

- UL Recognized, Guide JFHR2, File E56412, RoHS compliant, CE

Typical applications

- Telecommunications DC power circuit protection
- Applications requiring printed circuit board mounting

Features

- The UL Recognized ratings and current-limiting capability make this fuse ideal for cable protection on existing DC power distribution systems
- A unique blue label is used on all Telpower fuses to designate their DC capability
- PCB tab versions eliminate the need for fuseclips when mounting the fuse on a circuit board

Catalog no. (amps)			
Ferrule			
TPS-1	TPS-6	TPS-25	TPS-50
TPS-2	TPS-10	TPS-30	TPS-60
TPS-3	TPS-15	TPS-35	TPS-70
TPS-5	TPS-20	TPS-40	TPS-80
Horizontal PCB tabs			
TPS-1L	TPS-6L	TPS-25L	TPS-50L
TPS-2L	TPS-10L	TPS-30L	TPS-60L
TPS-3L	TPS-15L	TPS-35L	TPS-70L
TPS-5L	TPS-20L	TPS-40L	TPS-70LB*
Vertical PCB tabs			
TPS-40V	TPS-50V	TPS-80V	

* LB = Bolt tag

Accessories

- Spare fuse holder TPSFH-AS, see page 15-4

Dimensions — in (mm)

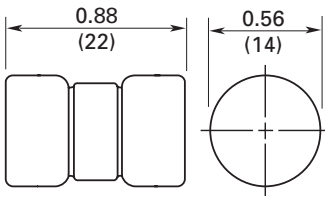

Data sheet no. 5009

TP158HC fused pullout disconnect

High amp panel mount, rear access fused pullout disconnect for use only with Telpower TPL-B main fuses (70-250 A) and GMT-A indicating fuse (see page 14-11). It is recommend to also use the GMT-X cover for the GMT-A fuse.

Ratings

- Volts 80 Vdc
- Amps 70-250 A
- SCCR 100 kA

Agency information

- UL Recognized (investigated to UL 1801) as a disconnect switch for the interruption of load current by means of withdrawing the fuse pullout, Guide QPQY2, File E97649

Typical applications

- Telecommunications DC power circuit protection

Features

- Similar profile, mounting method, and backplane configuration as 15800. The TP158HC can be installed into existing 15800 panels using the space of two 15800 pullout disconnects
- Innovative new fuse pullout design eliminates need for tools to replace the Telpower type TPL-B fuse
- Alarm output with wire wrap terminal or connection to 0.063 inch (1.6mm) thick common alarm bus
- Hardware included: Load: washer, split lockwasher, and 5/16 - 18 nut (metric M8 x 1.25)

Catalog no.	Hardware type
TP158HC	English
TP158HC-M	Metric

Accessories

- Spare fuse holders: TPSFH-LB (TPL-B fuses) and TPSFH-T (GMT fuses)

Dimensions

- See data sheet no. 5021

Application notes

The line connection uses a 1/4-20 bolt (metric M6 x 1) that threads into the line terminal. The line terminal is designed with a float of ±0.02" (±0.50mm) to allow for variation in the distance between the TP158HC mounting flange and the line busbar (see dimensions). Equipment should be designed to eliminate any relative movement between the TP158HC mounting flange and the line busbar.

The alarm circuit is not intended for pre-charging capacitive circuits. Maximum alarm circuit current 1 A.

Data sheet no. 5021

15100 fused pullout disconnect

Fused pullout disconnect system for use with TPL Telpower fuses.

Ratings

- Volts 60 Vdc
- Amps 70-800 A
- SCCR 100 kA

Agency information

- UL Recognized, Guide QPQY2, File E97649
- CE

Typical applications

- Telecommunications DC power circuit protection

Features

- Single-pole fusible disconnect switch for primary DC power distribution
- Robust housing and terminal construction for demanding applications
- Panel mounting
- Easily connected to line or load bus

Catalog no.	TPL fuse amp range
15100-401	70-400
15100-601	300-800

Dimensions — in (mm)

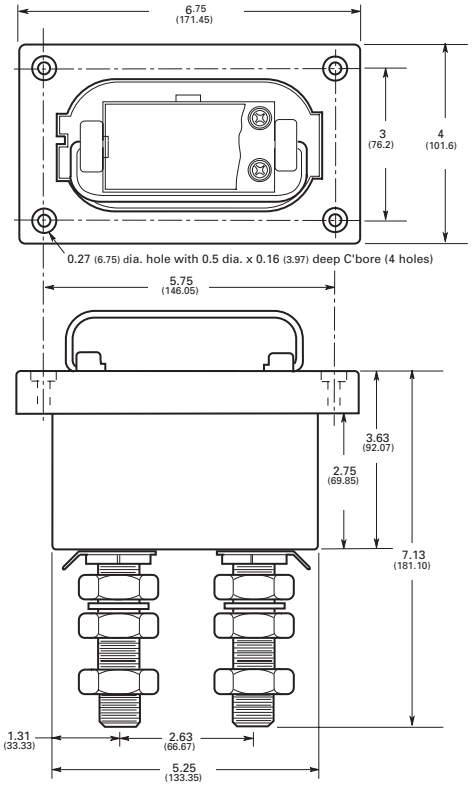

Data sheet no. 5003

TPHCS high current fused pullout disconnect

High current fused pullout disconnect for use with TPL-B, TPL-C and TPH Telpower fuses. Available as a complete pullout disconnect or just the pullout. Base may be purchased separately.

Ratings

- Volts 80 Vdc
- Amps 70-800 A
- SCCR 100 kA

Agency information

- UL Recognized (investigated to UL 1801) as a disconnect switch for the interruption of load current by means of withdrawing the fuse carrier
- UL Recognized to meet the requirements for Canadian Standards

TPHCS800-MAV shown

Typical applications

- Telecommunications DC power circuit protection

Features

- Innovative design eliminates needing tools to replace the TPL-B, TPL-C or TPH fuses
- Easy to install with captive fasteners for direct busbar mounting (bolts not included). Standard 1/4" quick-connect for easy remote alarm connection
- Optional electronic alarm eliminates needing parallel indicating fuses while providing local and remote open-fuse indication (maximum remote alarm current: 20 mA); Bipolar alarm: designed for both central office and Radio applications, Local LED open fuse indication for easy viewing.
- Carrier window allows easy viewing of installed fuse amp rating
- Compact design is ideal for today's high power, high-density cabinets

Catalog no. (pullout and base)	Hardware (option)	For fuse symbol	Fuse amp range
TPHCS250-M	Metric	TPL-B	70-250
TPHCS250-E	English	TPL-B	70-250
TPHCS250-ML	Metric, LED	TPL-B	70-250
TPHCS250-EL	English, LED	TPL-B	70-250
TPHCS250-MAV	Metric, alarm	TPL-B	70-250
TPHCS250-EAV	English, alarm	TPL-B	70-250
TPHCS800-M	Metric	TPL-C or TPH	300-800
TPHCS800-E	English	TPL-C or TPH	300-800
TPHCS800-ML	Metric, LED	TPL-C or TPH	300-800
TPHCS800-EL	English, LED	TPL-C or TPH	300-800
TPHCS800-MAV	Metric, alarm	TPL-C or TPH	300-800
TPHCS800-EAV	English, alarm	TPL-C or TPH	300-800

Data sheet no. 5020

Catalog no. (components)	Description rating/ hardware/option	For fuse symbol	Amp range
TPHCS250-P	Pullout only (250 A)	TPL-B	70-250
TPHCS800-P	Pullout only (800 A)	TPL-C or TPH	300-800
TPHCS-B-M	Base only, metric	—	800 max
TPHCS-B-E	Base only, English	—	800 max
TPHCS-B-ML	Base only, metric, LED	—	800 max
TPHCS-B-EL	Base only, English, LED	—	800 max
TPHCS-B-MAV	Base only, metric, alarm	—	800 max
TPHCS-B-EAV	Base only, English, alarm	—	800 max

Notes

1. TPHCS250 and TPHCS800 pullouts and bases are the same with exception to the fuse type the pullout will hold (TPL-B, TPL-C or TPH).
2. Plastic rated UL 94V0, 140°C RTI.

Dimensions — mm (in)

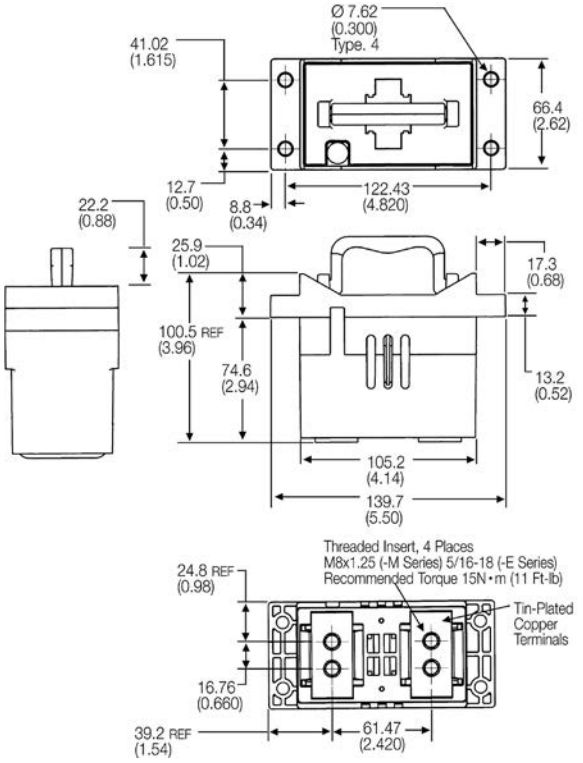

TPL high amp DC fuses

High amp DC power distribution fuses for use with Telpower 15100, 15200, TP158HC and TPHCS fused pullout disconnects. TPL-TA adapter kit is necessary when replacing a UBO fuse.

Ratings

- Volts 170 Vdc
- Amps 70-800 A
- IR 100 kA

Agency information

- UL Recognized Guide JFHR2, File E56412 Bellcore
- CE

Typical applications

- Telecommunications power circuit protection

Features

- Current-limiting design for DC power distribution systems
- UL Recognized branch circuit protection
- Complete system coordination capability
- Energy savings with low watts loss, low operating temperatures, and minimum I^2t levels

Catalog no.	Amps	Catalog no.	Amps
TPL-BA	70	TPL-BL	250
TPL-BB	80	TPL-CN	300
TPL-BC	90	TPL-CO	350
TPL-BD	100	TPL-CR	400
TPL-BE	125	TPL-CU	450
TPL-BF	150	TPL-CV	500
TPL-BG	175	TPL-CZ	600
TPL-BH	200	TPL-CZH	800
TPL-BK	225		

Accessories

- Spare fuse holders: TPSFH-LB (for TPL-B fuses) TPSFH-LC (for TPL-C fuses)

Dimensions — in (mm)

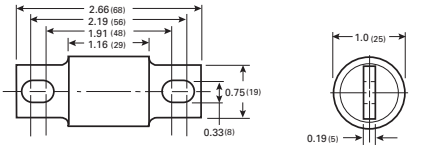

TPL-BA, TPL-BD, TPL-BF, TPL-BH, TPL-BK and TPL-BL

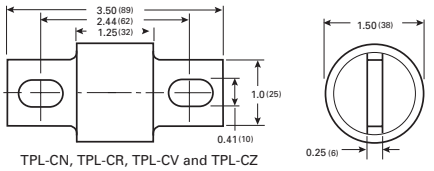

TPL-CN, TPL-CR, TPL-CV and TPL-CZ

Data sheet no. 5020

Data sheet no. 5005

TPN high amp current limiting DC fuses

The TPN fuse is a current-limiting DC power distribution fuse that's dimensionally similar to UL Class R branch circuit fuses making them easy to install using standard RM60_ modular Class R fuse blocks.

Ratings

- Volts 170 Vdc
- Amps 1-600 A
- IR 100 kA

Agency information

- UL Recognized, Guide JFHR2, File E56412

Typical applications

- Telecommunications power circuit protection

Features

- Current-limiting design for DC power distribution systems
- Recognized branch circuit protection
- Complete system coordination capability
- Energy savings with low watts loss, low operating temperatures, and minimum I^2t levels

Catalog no. (amps)			
TPN-1	TPN-30	TPN-90	TPN-250
TPN-3	TPN-35	TPN-100	TPN-300
TPN-5	TPN-40	TPN-110	TPN-350
TPN-6	TPN-45	TPN-125	TPN-400
TPN-10	TPN-50	TPN-150	TPN-450
TPN-15	TPN-60	TPN-175	TPN-500
TPN-20	TPN-70	TPN-200	TPN-600
TPN-25	TPN-80	TPN-225	

Accessories

- Spare fuse holders:TPSFH-N30 (for TPN 1-30) TPSFH-N60 (for TPN 35-60)

Recommended modular* Class R fuse blocks

Catalog no.	Amps
RM25030-1CR	30
RM25060-1CR	60
RM25100-1CR	100
RM25200-1CR	200
RM25400-1CR	400
RM25600-1CR	600

* Blocks can be snapped together to create the number of required poles. Optional indicating and non-indicating finger-safe covers available for all blocks.

Dimensions — in (mm)

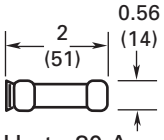

Up to 30 A

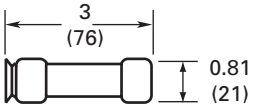

35 A to 60 A

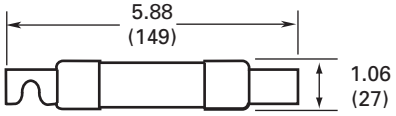

70A to 100A

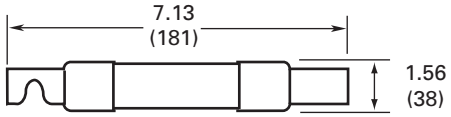

110A to 200A

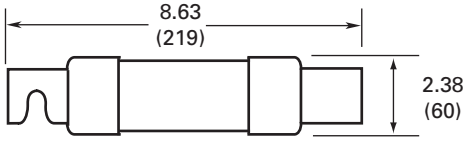

225A to 400A

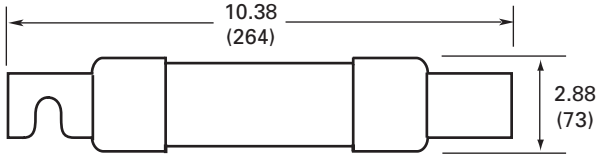

450A to 600A

70 Type pin indicating fuses

Pin indicating fuse for use in the 15087 panel-mount fuse holder.

Ratings

- Volts
  - 125 Vac
  - 300 Vdc
- Amps 1/10-10 A
- IR 1 kA @ 300 Vdc

Agency information

- UL Recognized, Guide JDYX2, File E19180 Bellcore
- CE

Catalog no. (amps)	Color code	Lucent comcode ref. no.	Code/list no.
70P-1/10A*	Gray/White	100203413	KS23751-L10
70R-15/100A*	Red/White	101384550	KS23751-L11
70E-18/100A*	Yellow	100203363	KS23751-L5
70X-2/10A	Black	—	—
70F-1/4A*	Violet	100203371	KS23751-L6
70K-1/4A*	Violet/White	100203405	KS23751-L9
70G-1/2A*	Red	100203389	KS23751-L7
70H-3/4A*	Brown	100203397	KS23751-L8
70I-1A	Pink	—	—
70A-1-1/3A*†	White	100203322	KS23751-L1
70B-2A*	Orange	100203330	KS23751-L2
70C-3A*	Blue	100203348	KS23751-L3
70J-3-1/2A	Black/White	—	—
70D-5A*	Grn/Black	100203355	KS23751-L4
70L-6A	Grn/White	—	—
70M-8A	Brown/White	—	—
70N-10A	Violet/Yellow	—	—
72A Plastic Case (dummy)		100203421	—
72B Blister Pack (dummy)		103757977	—

* Product designed to comply with Bellcore Technical Reference TR-TSY-000799 Issue 1, December 1988.
† Not UL Recognized.

Data sheet no. 5007

15087 fuse holder

Panel mount fuse holder for use with 70 Type fuses.

Ratings

- Volts 300 Vdc
- Amps 12 A

Agency information

- UL Recognized, Guide IZLT2, File E14853
- CE

Flammability rating

- UL 94V0

Catalog number 15087

Typical applications

- Telecommunications DC power circuit protection

Features

- Panel mount fuse holder for 70 type fuses supplied with two screws
- Remote alarm capability

Optional color-code eyelets

Color-coded eyelets are used with the fuse holder to indicate its fuse amp rating.

Catalog no.	Amps	Color coding
1A1706-17	15/100	Red/White
1A1706-01	18/100	Yellow
1A1706-15	1/10	Gray/White
1A1706-02	2/10	Black
1A1706-03	1/4	Violet
1A1706-04	1/4	Violet/White
1A1706-05	1/2	Red
1A1706-06	3/4	Brown
1A1706-07	1	Pink
1A1706-08	1-1/3	White
1A1706-09	2	Orange
1A1706-10	3	Blue
1A1706-16	3-1/2	Black/White
1A1706-11	5	Green/Black
1A1706-12	6	Green/White
1A1706-13	8	Brown/White
1A1706-14	10	Violet/Yellow

Data sheet no. 5007

HLS, HLT, PCT holders for GMT indicating fuses

Configurable fuse holders for use with GMT indicating fuses:

- PCT single-pole
- HLS 1-25 pole without flanges
- HLT 1-25 pole with flanges

Ratings

- Volts 60 Vdc/125 Vac
- Amps 15 A per pole
- Poles Up to 25 (HLT, HLS)

Agency information

- UL Recognized, Guide IZLT2, File E14853, 15 A (60 Vdc)
- CE

Flammability rating

- UL 94V0

Typical applications

- Telecommunications DC power circuit protection

Features

- Multiple configurations provide application flexibility
- Compact size saves space

Catalog symbol	Number of poles
PCT	1
HLS	1-25
HLT	1-25

To order, see data sheet no. 5010 for build-a-code to determine:

- Body style (HLT or HLS)
- Number of poles
- Busbar type
- Busbar position
- Termination location

Data sheet no. 5010

GMT indicating fuses for HLS, HLT, PCT holders

Fast-acting indicating fuses for HLT, HLS and PCT fuse holders.

Ratings

- Volts
  - 60 Vdc
  - 125 Vac
- Amps 18/100 to 15 A
- IR
  - 450 A@60 Vdc
  - 300 A@125 Vac

RoHS 2011/65/EU

GMT - Dummy

Agency information

- UL Recognized, Guide JFHR2, File E56412
- RoHS compliant, CE

Typical applications

- Telecommunications DC power circuit protection

Features

- Local and remote indication capability
- Color coded for easy amp rating identification

Catalog no. (amps)*	Color code	Catalog no. (amps)	Color code
GMT-18/100A	Yellow	GMT-3-1/2A	White/Blue
GMT-1/4A	Violet	GMT-4A	White/Brown
GMT-3/8A	Green/Gray	GMT-5A	Green
GMT-1/2A	Red	GMT-7-1/2A	Black/White
GMT-65/100A	Black	GMT-10A	Red/White
GMT-3/4A	Brown	GMT-12A	Yellow/Green
GMT-1A	Gray	GMT-15A	Red/Blue
GMT-1-1/3A	White	GMT-Dummy	Gray body
GMT-1-1/2A	White/Yellow	GMT-X	Clear cover
GMT-2A	Orange	GMT-Y	Clear cover w/tab
GMT-3A	Blue		

* Some GMT ratings may be sold only in bulk pack.

Accessories

- Spare fuse holder, catalog number TPSFH-T

GMT-A fast-acting, open fuse indicator

Fast-acting GMT-A open fuse indicator is designed specifically for use in the Telpower 15800 and TP158HC fused pullout disconnects as a means of providing main fuse open indication.

Agency information

RoHS 2011/65/EU

- UL Recognized, Guide JFHR2, File E56412
- RoHS compliant
- CE

Catalog no./color code: GMT-A/Yellow

Data sheet no. 5008

BUSSMANN
SERIES

Selective coordination has never been easier.

With the Bussmann™ series **Quik-Spec™ Coordination Panelboard** (QSCP), it's simple and cost-effective to selectively coordinate using published circuit breaker/fuse and fuse/fuse ratio tables.

What's more, the compact panelboard features a footprint equal to circuit breaker panels but 40% smaller than traditional fusible panels. Its safety-focused design includes finger-safe branches, branch fuse interlock and fuse ampacity rejection.

And with up to 200 kA short-circuit current rating (SCCR), the QSCP easily withstands high fault currents.

Learn more at Eaton.com/bussmannseries.

EATON
Powering Business Worldwide

Follow us on social media to get the latest product and support information.

Bussmann series accessories to fit your needs

Contents

Description	Section page
SAMI™ fuse covers — Class CC, G, H(K), J, R, T and UL supplemental (midget)	2
Fuse reducers — Class J, H(K) and R	
Dummy fuse "neutrals" — 1/4" x 1-1/4", UL supplemental (midget), Class CC, H(K) and R	3
Fuse pullers	
Fuse testers	
Spare fuse holders	4
Spare fuse cabinet	
Tron™ clip clamps	
DIN-Rail adapter	

SAMI™ fuse covers

SAMI (Safety And Maintenance Improvement) fuse covers help improve electrical safety by shielding a fuse that's mounted in an open style block. They are available in indicating and non-indicating versions for fuse Classes CC, G, H(K), J, RK1, RK5 and T, as well as UL supplemental (midget-type) fuses. Indicating feature requires a minimum of 90 V to illuminate lamp.

One cover required for each pole. WARNING: To avoid electrical shock, turn power off before installing, removing or servicing.

Agency information

- UL Listed; SAMI-1I through SAMI-6I and SAMI-9I, SAMI-1N through SAMI-6N and SAMI-9N
- UL Recognized; Guide JDVS2, File E58836, SAMI-7I and SAMI-7N
- CSA Certified, Class 6225-01, File LR47235
- CE

Features

- Insulated cover isolate fuses mounted in open blocks
- Optional open fuse indicating light aids in system troubleshooting
- Units are re-usable
- Allows visual marking of lineside and loadside of fuses

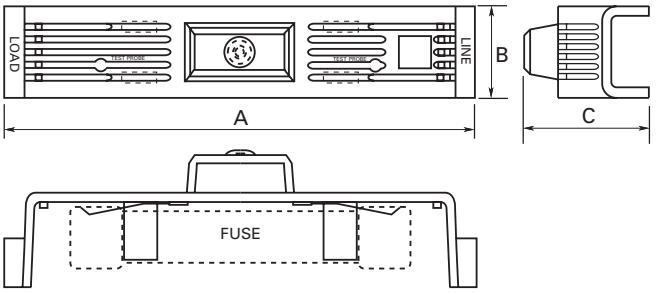

Catalog no.*	Volts/fuse class/amp range	Dimensions — in A	B	C
SAMI-1N**	600 V, J (0-30 A), 600 V, T (35-60 A) 250 V, RK, K5, H (35-60 A)	5.02	1.03	1.94
SAMI-2_	600 V, RK, K5, H (0-30 A)	7.03	1.30	2.07
SAMI-3_	600 V, J (65-100 A)	7.03	1.30	2.33
SAMI-5_	600 V, RK, K5, H (35-60 A)	8.20	1.30	2.18
SAMI-6_	600 V, J (35-60 A)	4.98	1.17	2.14
SAMI-7_	600 V, Midget, Class CC, G (0-30 A)	3.82	0.75	1.72
SAMI-9_	250 V, RK, K5, H (0-30 A) 600 V T (0-30 A)	3.82	0.75	1.72

* For indicating cover, add suffix "I", for non-indicating cover, add suffix "N," example: SAMI-7I = Indicating, SAMI-7N = Non-indicating.
**Available only as non-indicating.

Trimming guides, no. 12041, 12042, 12043, 12045, 12046, 12049

Fuse reducers and dummy "neutrals"

Reducers for Class J fuses (DFJ, JKS, LPJ)

Carton quantity: 10 pair

Catalog no.	Fuse amp range	Equipment/block amps
J-63	1-30	60
J-13	1-30	100
J-16	35-60	100
J-26	35-60	200†
J-21	70-100	200†
J-41	70-100	400†
J-42††	110-200	400†
J-62	110-200	600†
J-64	225-400	600†

† Not for bolt-on applications.
††Not compatible with JKS fuses.

Reducers for Class H(K) and R fuses

Agency information

- UL Listed, Guide IZZR, File E12853
- CSA Certified, Class 6225-01, File 47235

Carton quantity: 10 pair

Catalog no. 250 V	600 V	Fuse amp range	Equip./block amps
Class R reducers (FRN-R, FRS-R, KTN-R, KTS-R, LPN-RK, LPS-RK)			
NO.263-R	NO.663-R	Up to 30	60
NO.213-R	NO.216-R	Up to 30	100
NO.216-R	NO.616-R	35-60	100
NO.226-R	NO.626-R	35-60	200
NO.2621-R†	NO.2621-R†	70-100	200
NO.2641-R†	NO.2641-R†	70-100	400
NO.242-R†	NO.642-R†	110-200	400
NO.2661-R†	NO.2661-R†	70-100	600
NO.2662-R†	NO.2662-R†	110-200	600
NO.2664-R*†	NO.2664-R*†	225-400	600
Class H(K) reducers (NON, NOS, REN, RES)			
NO.263	NO.663	Up to 30	60
NO.213	NO.216	Up to 30	100
NO.216	NO.616	35-60	100
NO.226	NO.626	35-60	200
NO.2621	NO.2621	70-100	200
NO.2641†	NO.2641†	70-100	400
NO.2642	NO.2642	110-200	400
NO.2661†	NO.2661†	70-100	600
NO.2662†	NO.2662†	110-200	600
NO.2664†	NO.2664†	225-400	600

* Single reducer only, pair not required.
† Not CSA Certified.

Data sheet no. 1204

Data Sheet: 1118

Dummy fuse "neutrals"

NTN-R-60

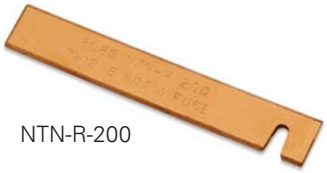
NTN-R-200

NNB

NNB-R

Note: These are not fuses

Catalog no.	Volts	Fuse equivalent	
		Dimension	Amp range
NNB	—	13/32" x 1-1/2"	—
NNB-R	—	Class CC	—
NNC	—	1/4" x 1-1/4"	—
NTN-R-30	250	Class R/H	Up to 30
NTN-R-60	250	Class R/H	35-60
NTN-R-100	250	Class R/H	70-100
NTN-R-200	250	Class R/H	110-200
NTN-R-400	250	Class R/H	225-400
NTN-R-600	250	Class R/H	450-600
NTS-R-30	600	Class R/H	Up to 30
NTS-R-60	600	Class R/H	35-60
NTS-R-100	600	Class R/H	70-100
NTS-R-200	600	Class R/H	110-200
NTS-R-400	600	Class R/H	225-400
NTS-R-600	600	Class R/H	450-600

Fuse pullers

Fuse pullers are available in various sizes to help safely and easily extract fuses from blocks and holders. They are only to be used when the associated circuit has been de-energized.

Catalog no.	Application
FP-2	13/32" to 13/16" diameter fuses
FP-3	1" to 1-3/4" diameter. fuses
FP-4	1-3/4" to 2-1/2" diameter. fuses
FP-6	Up to 60 A Class T fuses
FP-A3	Glass tube and ATC fuses
CFP-30	CUBEFuse up to 30 A
CFP-60	CUBEFuse 35-60 A
CFP-100	CUBEFuse 70-100 A

Fuse testers

Fuse testers for automotive blade, and, glass tube and ferrule fuses up to 1-7/8" length. Probes slide to appropriate fuse length. Batteries are included and replaceable.

WARNING: DO NOT test fuses while they are in the fuse panel.

Catalog no.	Description
FT-2*	Glass tube and ferrule fuse tester
FT-3	Blade fuse tester

* Replacement battery is Rayovac 364 or equivalent.

Spare fuse holders

TPSFH spare fuse holders are durably constructed using thermoplastic and feature common mounting using #6 screws or bolts on 5-inch centers. With built-in retaining clips to secure fuses, these dovetailed/interlocking holders simplify installation and reduce hardware needs. Common footprint allows for any combination of holders to be mounted together.

5TPH spare fuse holder for Class CC and 13/32" diameter fuses is constructed of thermoplastic with adhesive tape on back for easy mounting on cabinet doors without the need for extra hardware.

Flammability rating: UL 94V0

Catalog no.	Fuse capacity	For use with:
TPSFH-CW	4	TPC and/or TPW fuses
TPSFH-M	4	TPM fuses
TPSFH-LC	1	TPL-C series fuses
TPSFH-LB	1	TPL-B series fuses
TPSFH-N60	1	TPN (35-60 A) fuses
TPSFH-N30	4	TPN (1-30 A) fuses
TPSFH-AS	6	TPA and TPS fuses
TPSFH-T	10	GMT fuses
5TPH	5	Class CC and 13/32" diameter fuses

Data sheet no. 5014

Spare fuse cabinet

SFC locking spare fuse cabinet measures 24" W x 30" H x 12" D and has five cubic feet of storage space. It's constructed of heavy 16 gauge steel with durable baked ASA 61 grey enamel finish. Cabinet door is equipped with locking handle for security. Mounting holes are 16 inches on center with key slots.

Catalog no.	Description
SFC-FUSE-CAB	Cabinet and one shelf
SFC-SHELF*	Extra shelf for cabinet
2A1910-1	Replacement key
2A1910-3	Replacement lock

Data sheet no. 1119

TRON™ clip clamps

Clip clamps are constructed with a phenolic knob and plated-steel jaws. They provide a means of tightening the contact between fuse block clips and the fuse and are available in various sizes for both ferrule and blade-type cartridge fuse clips.

Catalog no.	Volts	For fuse amps
NO.1	250	Up to 30
NO.2	250	35-60
	600	Up to 30
NO.4	600	35-60
NO.5	250/600	70-100
NO.6	250/600	110-200
NO.7	250/600	225-400
NO.8	250/600	450-600

DIN rail adapter

A DIN-Rail adapter permits secure, positive snap-on mounting of up to 30 amps fuse blocks (1-, 2-, or 3-pole) onto various size rails to eliminates costly and time consuming drilling, tapping, and fastener mounting. The adapter mechanically locks into mounting holes of fuse blocks to form an integral part. One adapter is required for 1- and 2-pole blocks. Two adapters are required for 3-pole blocks.

With the exception of the 32mm DIN-Rail, all block/adapter assemblies can be removed from a rail simply by pulling up on the release tab.

Use of rail end-stops on both sides of adapters is recommended.

Catalog no.	Block fuse class/size*	Fits rail sizes	Color
DRA-1	CC	15mm (Sym.) 32mm (Asym.) DIN 35mm (Sym.)	Black
	13/32" x 1-1/2"		
	10x38mm		
	G		
	H (250 V)†		
	J (30 A, 60 A*)		
	R (250 V)†		

* Not applicable for new modular fuse blocks that have built-in 35mm DIN-Rail mount capability.
† Mounting on 15mm rails is not recommended.

Package quantities

- Standard 10
- Bulk 100 (Cat. No. BK/DRA-1)

We make what matters work*

*Horseless carriages. World War II aircraft. NASA space shuttles. Electric vehicles.

Over the past 100 years, Bussmann series products have protected the things that have propelled our world forward.

And they'll continue to protect for the next 100 years. Because we never lose sight of what matters. And it's our job to make sure it works.

Contents

Description	Section page
Fuse sizing for 600 V building electrical systems	2-3
Selective coordination	4
Low voltage, branch circuit fuse types and classes	5
Glossary of common electrical terms	6-7
Electrical formulas	7
FuseFinder fuse and fuse block cross reference	8-9
Catalog number index	10-14

For information on products not contained in this catalog, contact Customer Satisfaction, toll-free, at 855-287-7626 (855-BUSSMANN) between 7:00 a.m. — 6:00 p.m. Central time, M-F, or email BussCustSat@Eaton.com.

Fuse sizing for 600 V building electrical systems

General guidelines are given for selecting fuse amp ratings for most circuits. For specific applications warranting other fuse sizing, the load characteristics and appropriate NEC sections should be considered. The selections shown here are not, in all cases, the maximum or minimum amp ratings permitted by the NEC. Demand factors as permitted by the NEC are not included. Study the pertinent NEC sections noted by "()" and reference pertinent footnotes.

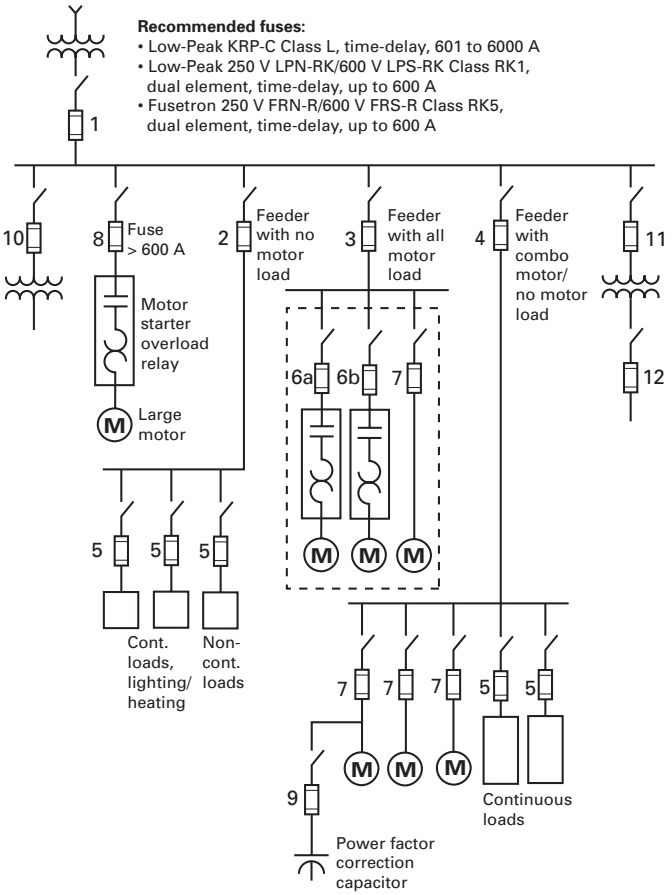

Dual-element, time-delay fuses

Class CF (up to 400 A), and J, RK1 and RK5 (up to 600 A)

For fuses above 600 A, use Class L time-delay fuses with ratings from 601-6000 A. While these fuses are not dual-element construction, the Bussmann series KRP-C-SP is a time-delay fuse.

1. **Main service.** Size fuse according to method in 4 below.
2. **Feeder circuit with no motor loads.** (215.3) The fuse size must be at least 125% of the continuous load† plus 100% of the non-continuous load. Do not size larger than the conductor's ampacity*.
3. **Feeder circuit with all motor loads.** (430.62) Size the fuse at 150% to 175% of the largest motor's full load current** plus the full-load current** of all other motor'sΔ.
4. **Feeder circuit with mixed loadsΔ.** (430.63) Size fuse at sum of:
   a. 150% to 175%†† of the largest motor's full-load current**, plus
   b. 100% of all other motors' full-load current**, plus
   c. 125% of the continuous, non-motor load†, plus
   d. 100% of the non-continuous, non-motor load
5. **Branch circuit with no motor load.** (210.20) The fuse size must be at least 125% of the continuous load† plus 100% of the non-continuous load. Do not size larger than the conductor's ampacity*.
6. **Motor branch circuit with overload relays.** Where overload relays are sized per 430.32 for motor running overload protection, there are various alternatives:

   6a. Motor branch circuit short-circuit and ground fault protection. (430.52) (most common). Size the fuse between 150 to 175%†† of the full load current.** Provides branch circuit short-circuit and ground fault protection only.

   6b. Motor branch circuit short-circuit and ground fault protection (430.52) as well as backup overload protection. Size FRN-R and FRS-R Class RK5 dual-element, time-delay fuses at 125% and LPN-RK-SP and LPS-RK-SP Class RK1 dual-element, time-delay fuses at 130% of motor full-load current or next higher size. This results in closer fuse sizing and provides some backup running overload protection. In addition, it provides motor branch circuit short-circuit and ground fault protection. Sizing in this manner may result in better motor protection if the overload relays are not properly sized or calibrated.
7. **Motor branch circuit with only fuse protection.** Where the fuse is the only motor protection, the following FRS-R and FRN-R, Class RK5, fuses provide motor running overload protection (430.32) and short-circuit protection (430.52):
   - Motor 1.15 service factor or 40°C rise. Size the fuse at 110% to 125% of the motor full-load current on the name plate [430.6(a)(2)].
   - Motor less than 1.15 service factor or over 40°C rise. Size fuse at 100% to 115% of motor full-load current on the name plate [430.6(a)(2)].
8. **Large motor branch circuit.** Fuse larger than 600 A. [436.52(c) and 430.52(c)(1) Exceptions 2(d)]. For large motors, size Low-Peak KRP-C-SP time-delay fuse at 175% to 300% of the motor full-load current**, depending on the starting method; i.e., part-winding starting, reduced voltage starting, etc.
9. **Power factor correction capacitors.** [460.8(b)]. Size dual-element fuses as low as practical, typically 150% to 175% of capacitor rated current.
10. **Transformer primary fuse (without secondary fuse protection).** [450.3(b)] When transformer primary current is equal to or greater than 9 amps, the dual-element, time-delay fuse should be sized at 125% of transformer primary current or the next size larger if 125% does not correspond to a standard fuse size. Note: Secondary conductors must be protected from overcurrent damage per Article 240.
11. **Transformer primary fuse (with secondary fuse protection).** [450.3(b)] May be sized at 250% of transformer primary current if the secondary is fused per 12 below.
12. **The secondary fuse is sized at no more than 125% of secondary full-load current.** [450.3(b)] Note: Secondary conductors must be protected at their ampacities per Article 240.

Non-time delay and all Class CC fuses

(FCF, JKS, KTN-R, KTS-R, JJN, JJS, LP-CC, KTK-R and FNQ-R)

1. **Main service.** Size fuse according to method in 4.
2. **Feeder circuit with no motor loads.** (215.3) The fuse size must be at least 125% of the continuous load† plus 100% of the non-continuous load. Do not size larger than the conductor's ampacity.*
3. **Feeder circuit with all motor loads.** (430.62) Size the fuse at 300% of the largest motor's full-load current** plus the full-load current** of all other motors.
4. **Feeder circuit with mixed loads.** (430.62) Size fuse at sum of:
   a. 300% of the full-load current** of the largest motor, plus
   b. 100% of the full-load current** of all other motors, plus
   c. 125% of the continuous, non-motor load†, plus
   d. 100% of the non-continuous, non-motor load
5. **Branch circuit with no motor loads.** (210.20) The fuse size must be at least 125% of the continuous load† plus 100% of the non-continuous load. Do not size larger than the conductor's ampacity.*

6a. Motor branch circuit with overload relays. (430.52) Size the fuse at 300% of the full load current**. Provides branch circuit short-circuit and ground fault protection only. Other means must be utilized to provide motor overload protection (see 430.32). (If 300% is not a standard fuse amp rating, 430.52(C)(1) Exception 1 permits the next standard fuse amp rating. If the motor cannot start with this size fuse, 430.52(C)(1) Exception 2 permits increasing the fuse size up to 400% provided the fuse rating does not exceed 600 A.)

6b. Motor branch circuit short-circuit and ground fault protection (430.52) as well as backup overload protection. Not applicable for non-time-delay fuses; use FRN-R and FRS-R, Class RK5, dual-element time-delay fuses or LPN-RK-SP and LPS-RK-SP Class RK1, dual-element, time-delay fuses (see 6b under dual-element time-delay fuse selection). Non-time-delay fuses cannot be sized close enough to provide motor running backup overload protection. If sized for motor overload backup protection, non-time-delay fuses would open due to motor starting current.

7. **Motor branch circuit with only fuse protection.** Not applicable for non-time-delay fuses; use FRN-R and FRS-R, Class RK5, dual-element time-delay fuses (see 7 under dual-element time-delay fuse selection). Non-time-delay fuses cannot be sized close enough to provide motor running overload protection. If sized for motor overload protection, non-time-delay fuses would open due to motor starting current.
8. **Power factor correction capacitors.** [460.8(B)] Size non-time-delay fuses as low as practical, typically 250% to 300% of capacitor rated current.

Conductor ampacity selection

1. **Feeder circuit and main circuit with mixed loads.** (430.24) conductor ampacity at least sum of:
   a. 100%†† of the full-load current** of the largest motor, plus
   a. 100% of the full-load current** of all other motors, plus
   c. 125% of the continuous, non-motor load†, plus
   d. 100% of the non-continuous, non-motor load
2. **Feeder circuit with no motor load.** [215.2(a)(1)] Conductor ampacity at least 125% of the continuous load plus 100% of the non-continuous load.
3. **Feeder circuit with all motor loads.** (430.24) Conductor ampacity at least 125% of the largest motor full-load amps plus 100% of all other motors' full-load amps.
4. **Feeder circuit with mixed loads.** (430.24) Size according to method 1 above.
5. **Branch circuit with no motor load.** [210.19(a)(10] Conductor ampacity at least 125% of the continuous load plus 100% of the non-continuous load.

6, 7 and 8. Motor branch circuits. (430.22) Conductor ampacity at least 125% of the motor full-load current.

9. **Capacitor connected to motor branch circuit.** (460.8) Conductor ampacity at least 135% of capacitor rated current, and at least 1/3 the motor circuit conductors' ampacity.

10, 11. Conductor ampacity minimum 125% of transformer full-load current.

12. Conductor ampacity per 1 above.

† 100% of the continuous load can be used rather than 125% when the switch and fuse are listed for 100% continuous operation as an assembly (e.g., 215.3 Exc 1). Some bolted pressure switches and high pressure contact switches 400 A to 6000 A with Class J and L fuses in specified assemblies are listed for 100% continuous operation.

* Where conductor ampacity does not correspond to a standard fuse amp rating, the next higher amp rating fuse is permitted when 800 A or less [(240.4(B)]. Above 800 A the conductor ampacity must be equal or greater than the fuse amp rating [(240.4(C)]. However, per 240.91(B), when above 800 A for supervised industrial installations, the conductor ampacity is permitted to be 95% of the fuse amp rating as long as the equipment is listed for that size conductor and the conductor is protected within its time vs. current limits [240.4 Informational Note].

Δ In many motor feeder applications dual-element fuses can be sized at ampacity of feeder conductors.

• Available short-circuit current and the clearing time of the overcurrent device must be considered so that the conductor's ICEA (P32.382) withstand rating is not exceeded.

** On general motor applications, motor full load amps for calculating conductor ampacity and for calculating fuse amp ratings for motor branch circuit short-circuit and ground fault protection (430.52) are selected from NEC Tables 430.247 through 430.250 per 430.6(A)(1). However, the motor nameplate current rating is used for sizing motor overload protection (430.32) per 430.6(A)(2).

†† 430.52(C)(1) allows a maximum of 175% for time-delay fuses, for all but wound rotor and DC motors. A range of 150% to 175% was used for these guidelines, even though 430.52(C)(1) allows a maximum of 175% for time-delay fuses as stated above. The reason for showing this range is to highlight the possibility for application selection. In some situations, there may be a difference in the switch amp rating or fuse block amp rating in selecting 150% versus 175%. Using 175% is permitted and is suggested for heavy starting current or longer starting time applications.
Further note: the NEC permits larger sizing via two exceptions. 430.52(C)(1) Exception 1 permits the next standard size if 175% does not correspond with a standard fuse amp rating. If the motor cannot start with this size fuse, 430.52(C)(1) Exception 2 permits increasing a time-delay fuse size up to 225%.
(Note that while a time-delay fuse may not exceed 225% when using Exception 2, using a time-delay fuse could exceed 225% when applying Exception 1. For example, assume a motor with a FLA of 1.0 amp. 430.52(C)(1) would allow a 1.75 amp fuse. Exception 1 would allow a 3 amp time-delay fuse per 240.6(A). Exception 2 limits the time-delay fuse to 2.25 amps as a maximum, but Exception 2 is not utilized or needed if Exception 1 is adequate.)

*** The conductor ampacity may have to be greater due to using adjustment or correction factors per 210.(19)(A)(1) and 215.2(A)(1).

Selective coordination

While important, selecting overcurrent protective devices (OCPDs) based solely on their ability to carry system load current and interrupting the maximum fault current at their respective application points is not enough. As the demand for power system reliability increases, the OCPD's performance in the system becomes more and more critical as its function should, ideally, limit a power system outage to only that portion of the circuit which is faulted. The selected OCPD types and ratings (or settings) determine whether they are selectively coordinated upstream and downstream in a system so that only the nearest upstream OCPD will open for the full range of overcurrents and opening times, and leave the remainder of the system undisturbed to preserve service continuity.

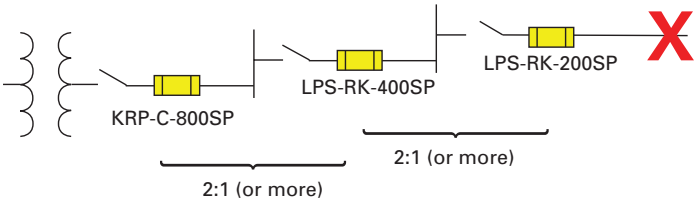

Figure 1 Low-Peak fuses applied with a simple 2:1 amp rating ratio achieves selective coordination.

Figure 1 shows the minimum amp rating ratios for Bussmann series Low-Peak fuses required to provide "selective coordination" (discrimination) between upstream and downstream fuses.

It's a simple matter to selectively coordinate a system using published fuse amp rating ratio tables and maintaining the minimum ratios between an upstream and downstream fuse. This will ensure selective coordination is achieved for all fault currents up to the fuse's interrupting rating. These selectivity ratios are for all overcurrent levels up to the fuse interrupting or 200 kA, whichever is lower.

For an in-depth examination of this subject, see selective coordination in Section 4 of the Selecting Protective Devices handbook, publication number 3002.

Coordination, Selective (selective coordination)

Localization of an overcurrent condition to restrict outages to the circuit or equipment affected, accomplished by the selection and installation of overcurrent protective devices and their ratings or settings for the full range of available overcurrents, from overload to the maximum available fault current, and for the full range of overcurrent protective device opening times associated with those overcurrents.

Selective coordination is mandatory per the NEC for the circuit paths of some vital loads on specific systems including:

- Elevator circuits — 620.62
- Critical operations data systems — 645.27
- Campus style fire pumps — 695.3
- Emergency systems — 700.32
- Legally required standby systems — 701.27
- Critical operations power systems — 708.54

Bussmann series fuse selectivity ratios

This selectivity ratio table identifies the fuse amp rating ratios that ensure selective coordination.

Circuit				Downstream / loadside fuse											
	Amp rating range			601-6000 A	601-4000 A	1-100 A	0-600 A			601-6000 A	0-600 A	0-1200 A	0-600 A	0-60 A	0-30 A
		Fuse type		Time-delay	Time-delay	Time-delay	Dual-element, time-delay			Fast-acting	Fast-acting	Fast-acting	Fast-acting	Time-delay	
			Trade name (fuse class)	Low-Peak (L)	Limitron (L)	CUBEFuse (CF[2])	Low-Peak (J)	Low-Peak (RK1)	Fusetron (RK5)	Limitron (L)	Limitron (RK1)	Limitron (T)	Limitron (J)	SC (G)	(CC)
			Bussmann fuse symbol	KRP-C_SP	KLU	TCF	LPJ-SP	LPN-RK-SP LPS-RK-SP	FRN-R FRS-R	KTU	KTN-R KTS-R	JJN JJS	JKS	SC	LP-CC FNQ-R KTK-R
Upstream / lineside fuse	601 to 6000 A	Time-delay	Low-Peak (L)	2:1	2.5:1	2:1	2:1	2:1	4:1	2:1	2:1	2:1	2:1	2:1	2:1
	601 to 4000 A	Time-delay	Limitron (L)	2:1	2:1	2:1	2:1	2:1	4:1	2:1	2:1	2:1	2:1	2:1	2:1
	0 to 600 A	Dual-element	Low-Peak (RK1)	LPN-RK-SP LPS-RK-SP	—	—	2:1	2:1	2:1	8:1	—	3:1	3:1	3:1	4:1	2:1
	0 to 600 A	Dual-element	Low-Peak (J)	LPJ-SP	—	—	2:1	2:1	2:1	8:1	—	3:1	3:1	3:1	4:1	2:1
	0 to 100 A	Dual-element	CUBEFuse (CF[2])	TCF	—	—	2:1	2:1	2:1	8:1	—	3:1	3:1	3:1	4:1	2:1
	0 to 600 A	Dual-element	Fusetron (RK5)	FRN-R FRS-R	—	—	1.5:1	1.5:1	1.5:1	2:1	—	1.5:1	1.5:1	1.5:1	1.5:1	2:1
	601 to 6000 A	Fast-acting	Limitron (L)	KTU	2:1	2.5:1	3:1	3:1	3:1	6:1	2:1	2:1	2:1	2:1	2:1	2:1
	0 to 600 A	Fast-acting	Limitron (RK1)	KTN-R KTS-R	—	—	3:1	3:1	3:1	8:1	—	3:1	3:1	3:1	4:1	—
	0 to 1200 A	Fast-acting	Limitron (T)	JJN JJS	—	—	3:1	3:1	3:1	8:1	—	3:1	3:1	3:1	4:1	—
	0 to 600 A	Fast-acting	Limitron (J)	JKS	—	—	3:1	3:1	3:1	8:1	—	3:1	3:1	3:1	4:1	—
	0 to 60 A	Time-delay	SC (G)	SC	—	—	3:1	3:1	3:1	4:1	—	2:1	2:1	2:1	2:1	—

General notes: Ratios given in this table apply to only Bussmann fuses. When fuses are within the same case size, consult Bussmann.

1. Where applicable, ratios are valid for indicating and non-indicating versions of the same fuse. At some values of fault current, specified ratios may be lowered to permit closer fuse sizing. Consult Bussmann.
2. Time-delay Class CF TCF CUBEFuse OCPDs are 1 to 100 A Class J performance; dimensions and construction are a unique, finger-safe design.

Low voltage, branch circuit fuse types and classes

The NEC defines the branch circuit OCPD as capable of providing protection for service, feeder and branch circuits, and equipment over the full range of overcurrents between its rated current and its interrupting rating. They're also the only OCPDs the NEC permits to be installed in a building's electrical system. The definition found in Article 100 is as follows:

"Overcurrent Protective Device, Branch Circuit. A device capable of providing protection for service, feeder, and branch-circuits and equipment over the full-range of overcurrents between its rated current and its interrupting rating. Such devices are provided with interrupting ratings appropriate for the intended use but no less than 5,000 amperes."

Per this definition, branch circuit OCPDs are suitable to protect branch or feeder circuits and service conductors at any point in the electrical system, and must be capable of protecting against the full range of overcurrents, including overloads and faults. In addition, the OCPD must have an interrupting rating sufficient for the application per NEC 110.9. Branch circuit OCPDs meet common, minimum standard requirements for spacing and operating time-current characteristics defined by UL.

The table below contains the acceptable fuses that can be used for branch circuit protection.

Device type	Acceptable devices	Bussmann series fuses
UL 248 branch circuit fuses	Class CC	LP-CC, FNQ-R, KTK-R
	Class CF	TCF, FCF
	Class G	SC
	Class H(K)	NON, NOS
	Class J	LPJ-, JKS, DFJ
	Class L	KRP-C, KLU, KTU
	Class RK1	LPN-RK, LPS-RK, KTN-R, KTS-R
	Class RK5	FRN-R, FRS-R
	Class T	JJN, JJS
	Plug fuses	W, T, TL, S, SL

The UL 248 fuse standards cover distinct low-voltage (600 volts or less) fuse classes. Of these, modern current-limiting fuse Classes CC, CF, G, J, L, R and T are the most important. The branch circuit current-limiting fuses' rejection feature helps ensure electrical system safety over its life because it prevents installing other fuse types or larger case sizes. Thus, fuses that cannot provide a comparable minimum protection level for critical ratings and performance cannot be inadvertently installed.

This is inherent in all current-limiting fuse classes. Each fuse class must meet:

- Maximum let-through limits (I_p and I^2t) during fault conditions
- Minimum voltage ratings
- Minimum 200 kA interrupting ratings for Class CC, CF, J, L, R and T
- Physical rejection of
  - Different fuse classes and case sizes*
  - Non current-limiting fuses

* Branch circuit fuse blocks and holders are made to hold a fuse class case size that corresponds to a particular amp range. This prevents fuses from the same class with a larger case size from being installed and helps prevent overfusing. There are instances where it is desirable to install a class fuse with a smaller case size than the block or holder. For these situations, it is permitted to use fuse reducers.

These product standards ensure branch circuit fuses provide specific, minimum circuit protection when current-limiting fuses and equipment are used. A given fuse class will ensure the voltage and interrupting rating, and degree of current limitation for the electrical system's life.

For example, by using Class J fuses and equipment, only Class J fuses can be installed. This ensures the voltage rating is always 600 V (whether the system is 120, 208, 480, or 575 V), the interrupting rating is at least 200 kA, and the fault current protection provided by its current-limiting, let-through characteristics. If the fuse needs replacing, only a Class J fuse can be installed.

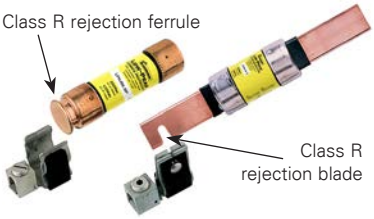

Class R fuse rejection clips (restriction on the ferrule or notch on the blade) that will only accept Class R fuses.

Common current-limiting Bussmann series fuses

FRN-R — Class RK5, 250 V, 200 kA IR up to 600 A

LPN-RK — Class RK1, 250 V, 300 kA IR up to 600 A

FRS-R — Class RK5, 600 V, 200 kA IR up to 600 A

LPS-RK — Class RK1, 600 V, 300 kA IR up to 600 A

LPJ — Class J, 600 V, 300 kA IR up to 600 A

LP-CC, FRQ-R, KTK-R — Class CC, 600 V, 200 kA IR up to 30 A

JJN — Class T, 300 V, 200 kA IR up to 1200 A

JJS — Class T, 600 V, 200 kA IR up to 800 A

Glossary of common electrical terms

Ampere (amp) — The measurement of intensity of rate of flow of electrons in an electrical circuit. An amp is the amount of current that will flow through a resistance of one ohm under a pressure of one volt.

Amp rating — The current-carrying capacity of a fuse. When a fuse is subjected to a current above its amp rating, it will open the circuit after a predetermined period of time.

Amp squared seconds, I^2t —The measure of heat energy developed within a circuit during the fuse's clearing. It can be expressed as "Melting I^2t", "Arcing I^2t" or the sum of them as "Clearing I^2t". "I" stands for effective let-through current (RMS), which is squared, and "t" stands for time of opening, in seconds.

Arcing time — The amount of time from the instant the fuse link has melted until the overcurrent is interrupted, or cleared.

Breaking capacity — (See Interrupting rating)

Cartridge fuse — A fuse consisting of a current responsive element inside a fuse tube with terminals on both ends.

Class CC fuse — 600 V, 200 kA amp interrupting rating, branch circuit fuses with overall dimensions of 13/32" x 1-1/2". Their design incorporates a rejection feature that allows them to be inserted into rejection fuse holders and fuse blocks that reject all lower voltage, lower interrupting rating 13/32" x 1-1/2" fuses. They are available from 1/10 through 30 amps.

Class CF fuse — A finger-safe UL Listed branch circuit rated fuse. Available in time-delay or fast-acting versions, the Class CF fuse has Class J electrical performance and is available in ratings from 1 to 100 A in 30, 60 and 100 A case sizes.

Class G fuse — A size rejecting branch circuit fuse in ratings from 1/2 through 20 amps (600 Vac) and 25 through 60 amps (480 Vac) with a 100 kA interrupting rating. The size rejecting feature helps to eliminate overfusing. The fuse diameter is 13/32" while the length varies from 1-5/16" to 2-1/4".

Class H fuse — 250 V and 600 V, 10 kA interrupting rating branch circuit fuses that may be renewable or non-renewable. These are available in ratings from 70 through 600 amps.

Class J fuse — These rejection style fuses are rated to interrupt a minimum of 200 kA AC. They are labeled as "current-limiting", are rated for 600 Vac and are not interchangeable with other classes. They are available from 1 through 600 amps.

Class K fuses — These are fuses listed as K-1, K-5, or K-9 fuses. Each subclass has designated I^2t and I_p maximums. These are dimensionally the same as Class H fuses, and they can have interrupting ratings of 50 kA, 100 kA, or 200 kA. While these fuses are current-limiting, they are not marked "current-limiting" on their label since they do not have a rejection feature.

Class L fuse — These fuses are rated for 601 through 6000 amps, and are rated to interrupt a minimum of 200 kA AC. They are labeled "current-limiting" and are rated for 600 Vac. They are intended to be bolted into their mountings and are not normally used in clips. Some Class L fuses have designed-in time-delay features for all purpose use.

Class R fuse — These are high performance fuses rated 1/10 through 600 amps in 250 V and 600 V ratings. All are marked "current-limiting" on their label and all have a minimum of 200 kA interrupting rating. They have identical outline dimensions with the Class H fuses but have a rejection feature that prevents the user from mounting a fuse of lesser capabilities (lower interrupting capacity) when used with special Class R Clips. Class R fuses will fit into either rejection or non-rejection clips.

Class T fuse — An industry class of 300 V and 600 V fuses in ratings from 1 through 1200 amps (300 V) and 1 through 800 amps (600 V). They are physically very small and can be applied where space is at a premium. They are fast-acting fuses, with an interrupting rating of 200 kA RMS.

Classes of fuses — The industry has developed basic physical specifications and electrical performance requirements for fuses with voltage ratings of 600 V or less. These are known as standards. If a type of fuse meets the requirements of a standard, it can fall into that class. Typical UL branch circuit fuse classes are CC, CF, G, H, J, K, L, RK1, RK5 and T.

Clearing time — The total time between the beginning of the overcurrent and the final opening of the circuit at rated voltage by an overcurrent protective device. Clearing time is the total of the melting time and the arcing time.

Current limitation — A fuse operation relating to short-circuits only. When a fuse operates in its current-limiting range, it will clear a short-circuit in less than 1/2 cycle. Also, it will limit the instantaneous peak let-through current to a value substantially less than that obtainable in the same circuit if that fuse were replaced with a solid conductor of equal impedance.

Dual-element fuse — A fuse with a special design that utilizes two individual-elements in series inside the fuse tube. One element, the spring actuated trigger assembly, operates on overloads up to 5 - 6 times the fuse current rating. The other element, the short-circuit section, operates on short-circuits up to its interrupting rating.

Electrical load — The part of the electrical system that actually uses the energy or does the work required.

Fast-acting fuse — A fuse that opens on overload and short-circuits very quickly. This type of fuse is not designed to withstand temporary overload currents associated with some electrical loads, when sized near the full load current of the circuit.

Fault current — Fault currents can be short-circuit currents, ground fault currents or arcing fault currents.

Fuse — An overcurrent protective device with a fusible link that operates and opens the circuit on an overcurrent condition.

High speed fuse — A fuse with no intentional time-delay in the overload range and designed to open as quickly as possible in the short-circuit range. These fuses are often used to protect solid-state devices.

Inductive load — An electrical load which pulls a large amount of current – an inrush current – when first energized. After a few cycles or seconds, the current "settles down" to the full-load running current.

Interrupting rating — The rating which defines a fuse's ability to safely interrupt and clear short-circuits. This rating is much greater than the amp rating of a fuse. The NEC defines interrupting rating as "The highest current at rated voltage that an overcurrent protective device is intended to interrupt under standard test conditions."

Melting time — The amount of time required to melt the fuse link during a specified overcurrent. (See arcing time and clearing time.)

"NEC" Dimensions — These are dimensions once referenced in the NEC. They are common to Class H and K fuses and provide interchangeability between manufacturers for fuses and fusible equipment of given amp and voltage ratings.

Ohm — The unit of measure for electric resistance. An ohm is the amount of resistance that will allow one amp to flow under a pressure of one volt.

Ohm's Law — The relationship between voltage, current, and resistance, expressed by the equation E = IR, where E is the voltage in volts, I is the current in amps, and R is the resistance in ohms.

One time fuse — Generic term used to describe a Class H non-renewable cartridge fuse, with a single-element.

Overcurrent — Any current in excess of the rated current of equipment or the ampacity of a conductor. It may result from overload, short-circuit or ground fault. (Ref. NEC Article 100.)

Overload — Operation of equipment in excess of normal, full load rating, or of a conductor in excess of rated ampacity that, when it persists for a sufficient length of time, would cause damage or dangerous overheating. A fault, such as a short-circuit or ground fault, is not an overload. (Ref. NEC Article 100.)

Peak let-through current, I_p — The instantaneous value of peak current let-through by a current-limiting fuse, when it operates in its current-limiting range.

Renewable fuse (600 V and below) — A fuse in which the element, typically a zinc link, may be replaced after the fuse has opened, and then reused. Renewable fuses are made to Class H standards.

Resistive load — An electrical load which is characteristic of not having any significant inrush current. When a resistive load is energized, the current rises instantly to its steady-state value, without first rising to a higher value.

RMS current — The RMS (root-mean-square) value of any periodic current is equal to the value of the direct current which, flowing through a resistance, produces the same heating affect in the resistance as the periodic current does.

Semiconductor fuse — Fuses used to protect solid-state devices. See "high speed fuse."

Short-circuit — Can be classified as an overcurrent which exceeds the normal full load current of a circuit by a factor many times (tens, hundreds or thousands greater). Also characteristic of this type of overcurrent is that it leaves the normal current carrying path of the circuit – it takes a "short cut" around the load and back to the source.

Short-circuit current rating (SCCR) — This term applies to components (single devices) and assemblies (equipment). For the component, it is the maximum fault current it can sustain without the occurrence of excessive damage. For equipment, it is the assembly's rating, generally limited by the lowest component SCCR in the circuit as determined by an approved method such as UL 508A, Supplement SB.

Short-circuit withstand — The maximum current that an unprotected electrical component can sustain for a specified period of time without the occurrence of extensive damage. Typically applies to devices or components that do not have a marked short-circuit current rating, such as conductors, transfer switches or semiconductor devices.

Single-phasing — The condition that occurs when one phase of a three-phase system opens, either in a low voltage (secondary) or high voltage (primary) distribution system. Primary or secondary single-phasing can be caused by any number of events. This condition results in unbalanced currents in polyphase motors and unless protective measures are taken, may cause overheating and failure.

Threshold current — The symmetrical RMS (root mean square) available current at the threshold of the current-limiting range, where the fuse becomes current-limiting when tested to the industry standard. This value can be read off a peak let-through chart where the fuse curve intersects the A—B line. A threshold ratio is the relationship of the threshold current to the fuse's continuous current rating.

Time-delay fuse — A fuse with a built-in delay that allows temporary and harmless inrush currents to pass without opening, but is so designed to open on sustained overloads and short-circuits.

Voltage rating — The maximum open circuit voltage in which a fuse can be used, yet safely interrupt an overcurrent. Exceeding the voltage rating of a fuse impairs its ability to clear an overload or short-circuit safely.

Electrical formulas

To find	Single-phase	Two-phase	Three-phase	Direct current
Amps when kVA is known	$\frac{kVA \times 1000}{E}$	$\frac{kVA \times 1000}{E \times 2}$	$\frac{kVA \times 1000}{E \times 1.73}$	Not applicable
Amps when horsepower is known	$\frac{Hp \times 746}{E \times \% \text{ eff.} \times pf}$	$\frac{Hp \times 746}{E \times 2 \times \% \text{ eff.} \times pf}$	$\frac{Hp \times 746}{E \times 1.73 \times \% \text{ eff.} \times pf}$	$\frac{Hp \times 746}{E \times \% \text{ eff.}}$
Amps when kilowatts are known	$\frac{kW \times 1000}{E \times pf}$	$\frac{kW \times 1000}{E \times 2\ pf}$	$\frac{kW \times 1000}{E \times 1.73 \times pf}$	$\frac{kW \times 1000}{E}$
Kilowatts	$\frac{I \times E \times pf}{1000}$	$\frac{I \times E \times 2 \times pf}{1000}$	$\frac{I \times E \times 1.73 \times pf}{1000}$	$\frac{I \times E}{1000}$
Kilovolt-amps	$\frac{I \times E}{1000}$	$\frac{I \times E \times 2}{1000}$	$\frac{I \times E \times 1.73}{1000}$	Not applicable
Horsepower	$\frac{I \times E \times \% \text{ eff.} \times pf}{746}$	$\frac{I \times E \times 2 \times \% \text{ eff.} \times pf}{746}$	$\frac{I \times E \times 1.73 \times \% \text{ eff.} \times pf}{746}$	$\frac{I \times E \times \% \text{ eff.}}{746}$
Watts	$E \times I \times pf$	$I \times E \times 2 \times pf$	$I \times E \times 1.73 \times pf$	$E \times I$
Energy efficiency		$\frac{\text{Load horsepower} \times 746}{\text{Load input kVA} \times 1000}$		
Power factor (pf)	$\frac{\text{Power consumed}}{\text{Apparent power}} =$	$\frac{W}{VA}$ or	$\frac{kW}{kVA} = \cos Ø$	

Where: I = Amps, E = Volts, Hp = Horsepower, kVA = Kilovolt-amps, kW = Kilowatts, pf = Power factor, % eff. = Percent efficiency

FuseFinder fuse and fuse block cross reference

Eaton, the leader in circuit protection, power management and electrical safety offers an extensive selection of Bussmann series fuses and fuse blocks to meet your overcurrent protection needs.

If you need to find a replacement to another manufacturer's glass tube, low voltage branch and supplemental or high speed fuse, or fuse block or holder, use this quick cross reference FuseFinder to identify the Bussmann series replacement.

If you cannot find a product cross, more extensive listings are available online at Eaton.com/bussmannseries/FuseFinder.

Or email our Application Engineers at FuseTech@Eaton.com.

Fuse cross reference

Competitor	Bussmann series	Competitor	Bussmann series	Competitor	Bussmann series
0481(amp)	GMT-(amp)A	413(amp)	MDM-(amp)	ATMR(amp)	KTK-R(amp)
211(amp)	GDC-(amp)	414(amp)	ABS-(amp)	ATQ(amp)	FNQ-(amp)
212(amp)	GDB-(amp)	417(amp)	ABS-(amp)	ATQR(amp)	FNQ-R-(amp)
213(amp)	GDC-(amp)	418(amp)	TR/3216FF-(amp)	BBC(amp)	ABC-(amp)
215(amp)	S505-(amp)	429(amp)	3216FF(amp)	BDB(amp)	GDB-(amp)
216(amp)	GDA-(amp)	431(amp)	0603FA(amp)	BDC(amp)	GDC-(amp)
217(amp)	GDB-(amp)	5140(amp)	BAF-(amp)	BDL(amp)	MDL-(amp)
218(amp)	GDC-(amp)	5170(amp)	AGU-(amp)	BGC(amp)	AGC-(amp)
221(amp)	S505-V-(amp)	523(amp)	FNM-(amp)	BGX(amp)	AGX-(amp)
226(amp)	GDA-V-(amp)	5HF(amp)	GDA-(amp)	BLF(amp)	BAF-(amp)
227(amp)	GDB-V-(amp)	5HFP(amp)	GDA-V-(amp)	BLN(amp)	BAN-(amp)
228(amp)	GDC-V-(amp)	5HT(amp)	S505-(amp)A	BLS(amp)	BBS-(amp)
230(amp)	C515-(amp)	5MF(amp)	GMA-(amp)	BMA(amp)	GDA-(amp)
235(amp)	GMA-(amp)	5MFP(amp)	GMA-V-(amp)	CBO(amp) [4-160A]	HBO-(amp)
236(amp)	GMA-V-(amp)	5SF(amp)	GDB-(amp)	CCK(amp) [1-300A]	ACK-(amp)
238(amp)	GMD-V-(amp)	5ST(amp)	GDC-(amp)	CCL(amp) [30-100A]	ACL-(amp)
239(amp)	GMD-(amp)	6J(amp)X	KTK-(amp)	CCLB(amp) [20-250A]	KGJ-E-(amp)
257(amp)	ATC-(amp)	6R(amp)D	LPS-RK-(amp)SP	CCLW(amp) [1-300A]	KGJ-(amp)
297(amp) [auto fuse]	ATM-(amp)	702(amp)	HVJ-(amp)	CCMR [1-30A Only]	LP-CC(amp)
299(amp)	MAX-(amp)	703(amp)	HVL-(amp)	CDNC(amp)	CDN(amp)††
2AG220	C517-(amp)	81200(amp)ST	CBS-(amp)	CDSC(amp)	CDS(amp)†††
2AG230	C515-(amp)	A70P(amp)-1 or Type 1	FWP-(amp)A14F	CNL(amp)	ANL-(amp)
301(amp)	AGA-(amp)	A70P(amp)-4 or Type 4	FWP-(amp)A orB	CNN(amp)	ANN-(amp)
303(amp)	AGW-(amp)	A70Q(amp)-4 or Type 4	FWP-(amp)A or B	DCT [1-15A]	PV-(amp)A10F
307(amp)	SFE-(amp)	A70QS(amp)-14F	FWP-(amp)A14F	E(amp)FC	(amp)FC
311(amp)	AGC-(amp)	A70QS(amp)-22F	FWP-(amp)A22F	E(amp)FE	(amp)FE
312(amp)	AGC-(amp)	A70QS [35-200]-4	FWP-(amp)A or B	E(amp)FET	(amp)FET
313(amp)	MDL-(amp)	A70QS [225-400]-4 or 4K	FWP-(amp)A or B	E(amp)FM	(amp)FM
314(amp)	ABC-(amp)	A70QS [450-600]-4K	FWP-(amp)A or B	E(amp)FMM	(amp)FMM
315(amp)	MDL-V-(amp)	A70QS [700-800]-4	FWP-(amp)A or B	E(amp)LCT [6-20A]	(amp)LCT
318(amp)	AGC-V-(amp)	A50P(amp)-1	FWH-(amp)A14F	E(amp)LET [25-180A]	(amp)LET
322(amp)	GBB-(amp)	A50P(amp)-4	FWH-(amp)A or B	E(amp)LMMT [315-900A]	(amp)LMMT
323(amp)	MDA-(amp)	A50QS(amp)-4 or Type 4	FWH-(amp)A or B	E(amp)LMT [160-450A]	(amp)LMT
324(amp)	ABC-V-(amp)	A30QS(amp)-1 or Type 1	FWX-(amp)A14F	E100SF(amp) [20-30A]	FWJ-(amp)A14F
325(amp)	MDA-V-(amp)	A30QS [35-700]-4 or Type 4	FWX-(amp)A	E100S(amp) [40-2000A]	FWJ-(amp)
326(amp)	MDA-(amp)	A30QS [1000-1200]-128	FWX-(amp)AH	E15S(amp) [35-3000A]	FWA-(amp)A
334(amp)	GLD-(amp)	A15QS [1-30]-2	FWA-(amp)A10F	E15SF(amp) [5, 10, 15, 20, 25, 30A]	FWA-(amp)A10F
336(amp)	GBA-(amp)	A15QS [35-60]-1	FWA-(amp)A21F	E25S(amp) [1000-2500A]	FWX-(amp)AH
361(amp)	AGX-(amp)	A15QS [70-400]-4	FWA-(amp)B	E25S(amp) [35-800A]	FWX-(amp)A
362(amp)	AGX-(amp)	A2D(amp)R	LPN-RK(amp)SP	E25SFX(amp) [5-30A]	FWX-(amp)14F
3770(amp)	SL-(amp)	A2K(amp)	KTN-R(amp)	E50S(amp)	FWH-(amp)
3780(amp)	S-(amp)	A3T(amp)	JJN(amp)	E50SF(amp) [5-30A]	FWH-(amp)14F
3785(amp)	T-(amp)	A4BQ [225-600]	KRP-CL-(amp)	E70S(amp)	FWP-(amp)
3AB(amp)	ABC-(amp)	A4BQ [601-6000]	KRP-C-(amp)SP	ECK(amp) [1-300A]	ACK-(amp)
3ABP(amp)	AGC-V-(amp)	A4BT [601-4000]	KLU [601-4000]	ECL(amp) [30-100A]	ACL-(amp)
3AG(amp)	AGC-(amp)	A4BY(amp)	KLU(amp)	ECN(amp)	FRN-R-(amp)
3AG311(amp)	AGC-(amp)	A4J(amp)	JKS(amp)	ECNR(amp)	FRN-R-(amp)
3AG312(amp)	AGC-(amp)	A6D(amp)R	LPS-RK(amp)SP	ECS(amp)	FRS-R-(amp)
3AG313(amp)	MDL-(amp)	A6K(amp)	KTS-R(amp)	ECSR(amp)	FRS-R-(amp)
3AG315(amp)	MDL-V-(amp)	A6T(amp)	JJS(amp)	ELR(amp)	GLR-(amp)
3AG318(amp)	AGC-V-(amp)	AG(amp)	SC(amp)	ENLE(amp)	ANL-(amp)
3SB(amp)	MDL-(amp)	AJT(amp)	LPJ(amp)SP	ENNE(amp)	ANN-(amp)
3SBP(amp)	MDL-V-(amp)	AM10/(amp)	LP-CC-(amp)	ERN(amp)	REN-(amp)*
401(amp)	GMT-(amp)A	AOK(amp)	ALS-(amp)	ERS(amp)	RES-(amp)**
411(amp)	ABS-(amp)	ATDR(amp)	LP-CC-(amp)	ESA(amp)	S-(amp)
412(amp)	ABS-(amp)	ATM(amp)	KLM(amp)	FA(amp)	SA(amp)

* >60 A use FRN-R (250 V) ** >60 A use FRS-R (600 V) † >12 A use TL †† <10 A use FRN-R (600 V) ††† <10 A use FRS-R (600 V)

Fuse cross reference

Competitor fuse family	Bussmann series	Competitor fuse family	Bussmann series	Competitor fuse family	Bussmann series
FII(amp)	CGL-(amp)	KLH(amp) [225-600A]	FWH-(amp)A	MEN(amp)	FNM-(amp)
FIIC(amp)	CGL-(amp)	KLH(amp) [35-200A]	FWH-(amp)B	MEQ(amp)	FNQ-(amp)
FIIM(amp) [125-200A]	(amp)M14CB	KLK(amp)	KTK-(amp)	MJS(amp)	C515-(amp)
FIIM(amp) [80-100A]	(amp)L09CB	KLKR(amp)	KTK-R-(amp)	MOL(amp)	BAF-(amp)
FLA(amp)	FNA-(amp)	KLLU(amp)	KLU-(amp)	NCL(amp)	KTN-R-(amp)
FLM(amp)	FNM-(amp)	KLMR(amp)	LP-CC-(amp)	NCLR(amp)	KTN-R-(amp)
FLN(amp)	FRN-R-(amp)	KLNR(amp)	KTN-R-(amp)	NLN(amp)	NON-(amp)
FLNR(amp)	FRN-R-(amp)	KLPC(amp)	KRP-C-(amp)SP	NLS(amp)	NOS-(amp)
FLQ(amp)	FNQ-(amp)	KLSR(amp)	KTS-R-(amp)	OT(amp)	NON(amp)
FLS(amp)	FRS-R-(amp)	KLW(amp)	FWA-(amp)10F	OTM(amp)	BAF-(amp)
FLSR(amp)	FRS-R-(amp)	KON(amp)	NON-(amp)	OTS(amp)	NOS(amp)
GFN(amp)	FNA-(amp)	KOS(amp)	NOS-(amp)	RF(amp)	REN(amp)*
GGU(amp)	AGU(amp)	L(amp)TD	KRP-C-(amp)SP	RFS(amp)	RES(amp)**
GL10/(amp)	KTK-(amp)	L15S(amp) [1-30A]	FWA-(amp)A10F	RLN(amp)	REN-(amp)*
HCLR(amp)	KTK-R-(amp)	L15S(amp) [35-60A]	FWA-(amp)A21F	RLS(amp)	RES(amp)**
HCTR(amp)	FNQ-R-(amp)	L15S(amp) [70-400A]	FWA-(amp)A	SAO(amp)	SA-(amp)
HSJ(amp)	DFJ(amp)	L25S(amp) [1-30A]	FWX-(amp)A14F	SBS(amp)	BBS-(amp)
IDSR[6-60A Only]	FRS-R-(amp)ID	L50S(amp) [1-30A]	FWH-(amp)A14F	SCL(amp)	KTS-R-(amp)
J(amp)	JKS-(amp)	L70S(amp) [1-30A]	FWP-(amp)A14F	SCLR(amp)	KTS-R-(amp)
JDL(amp)	LPJ-(amp)SP	LCU(amp)	KTU-(amp)	SEC(amp)	SC-(amp)
JFL(amp)	JKS-(amp)	LEN(amp)	FRN-R-(amp)	SLC(amp)	SC-(amp)
JLLN(amp)	JJN-(amp)	LENRK(amp)	LPN-RK-(amp)SP	SLO(amp)	SL-(amp)
JLLS(amp)	JJS-(amp)	LES(amp)	FRS-R-(amp)	SOO(amp)	S-(amp)
JLS(amp)	JKS-(amp)	LESR(amp)	FRS-R-(amp)	TLO(amp)	TL-(amp)
JTD(amp)	LPJ-(amp)SP	LESRK(amp)	LPS-RK-(amp)SP	TOO(amp)	T-(amp)
KLA(amp) [5, 10, 15, 20, 25, 30A]	FWA-(amp)A10F	LGR(amp)	GLR-(amp)	TR(amp)	FRN-R-(amp)
KLB(amp) [1-30A]	FWX-(amp)A14F	LHR(amp)	HLR(amp)	TRM(amp)	FNM-(amp)
KLC(amp)	KAC-(amp)	LKU(amp)	KLU-(amp)	TRS(amp)	FRS-R(amp)
KLDR(amp)	FNQ-R-(amp)	LLNRK(amp)	LPN-RK-(amp)SP	WOO(amp)	W-(amp)
KLH(amp) [1-30A]	FWH-(amp)A14F	LLSRK(amp)	LPS-RK-(amp)SP		

* >60 A use FRN-R (250 V) ** >60 A use FRS-R (600 V) † >12 A use TL. †† <10 A use FRN-R (600 V) ††† <10 A use FRS-R (600 V)

Fuse block and holder cross reference

Competitor	Bussmann series	Competitor	Bussmann series	Competitor	Bussmann series
LFJ60030(X)/(X)ID	JM60030-(X)CR	6030(X)J	JM60030-(X)CR	(R)6J30A(X)S	JM60030-(X)CR
LFJ60060(X)/(X)ID	JM60060-(X)CR	6060(X)J	JM60060-(X)CR	(R)6J60A(X)B	JM60060-(X)CR
LFJ60100(X)/(X)ID	JM60100-(X)CR***	610(XX)J	JM60100-(X)CR***	R6J100A(X)B	JM60100-(X)CR***
LFJ60200(X)/(X)ID	JM60200-(X)CR***	620(XX)J	JM60200-(X)CR***	6J200A(X)BFBD	JM60200-(X)CR***
LFJ60400(X)/(X)ID	JM60400-(X)CR***	640(XX)J	JM60400-(X)CR***	6J400A(X)BFBD	JM60400-(X)CR***
LFJ60600(X)/(X)ID	JM60600-(X)CR***	66(XX)J	JM60600-(X)CR***	6J600A(X)BFBD	JM60600-(X)CR***
LFR25030(X)/(X)ID	RM25030-(X)CR	203(XX)	HM25030-(X)CR	R30A(X)(XX)	RM25030-(X)CR
LFR25060(X)/(X)ID	RM25060-(X)CR	206(XX)	HM25060-(X)CR	R60A(X)(XX)	RM25060-(X)CR
LFR25100(X)/(X)ID	RM25100-(X)CR***	210(XX)	HM25100-(X)CR***	R100A(X)B	RM25100-(X)CR***
LFR25200(X)/(X)ID	RM25200-(X)CR***	220(XX)	HM25200-(X)CR***	R200A(X)BE	RM25200-(X)CR***
LFR25400(X)/(X)ID	RM25400-(X)CR***	240(XX)	HM25400-(X)CR***	R400A(X)B	RM25400-(X)CR***
LFR25600(X)/(X)ID	RM25600-(X)CR***	26(XX)	HM25600-(X)CR***	R600A(X)B	RM25600-(X)CR***
LFR60030(X)/(X)ID	RM60030-(X)CR	603(XX)	HM60030-(X)CR	6R30A(X)(XX)	RM60030-(X)CR
LFR60060(X)/(X)ID	RM60060-(X)CR	606(XX)	HM60060-(X)CR	6R60A(X)(XX)	RM60060-(X)CR
LFR60100(X)/(X)ID	RM60100-(X)CR***	610(XX)	HM60100-(X)CR***	6R100A(X)B	RM60100-(X)CR***
LFR60200(X)/(X)ID	RM60200-(X)CR***	620(XX)	HM60200-(X)CR***	6R200A(X)BE	RM60200-(X)CR***
LFR60400(X)/(X)ID	RM60400-(X)CR***	640(XX)	HM60400-(X)CR***	6R400A(X)B	RM60400-(X)CR***
LFR60600(X)/(X)ID	RM60600-(X)CR***	66(XX)	HM60600-(X)CR***	6R600A(X)B	RM60600-(X)CR***
LFH25030(X)/(X)ID	HM25030-(X)CR	203(XX)R	RM25030-(X)CR	(R)F30A(X)(XX)	HM25030-(X)CR
LFH25060(X)/(X)ID	HM25060-(X)CR	206(XX)R	RM25060-(X)CR	(R)F60A(X)(XX)	HM25060-(X)CR
LFH25100(X)/(X)ID	HM25100-(X)CR***	210(XX)R	RM25100-(X)CR***	RF100A(X)B	HM25100-(X)CR***
LFH25200(X)/(X)ID	HM25200-(X)CR***	220(XX)R	RM25200-(X)CR***	F200A(X)BE	HM25200-(X)CR***
LFH25400(X)/(X)ID	HM25400-(X)CR***	240(XX)R	RM25400-(X)CR***	RF400A(X)B	HM25400-(X)CR***
LFH25600(X)/(X)ID	HM25600-(X)CR***	26(XX)R	RM25600-(X)CR***	F600A(X)B	HM25600-(X)CR***
LFH60030(X)/(X)ID	HM60030-(X)CR	603(XX)R	RM60030-(X)CR	(R)6F30A(X)(XX)	HM60030-(X)CR
LFH60060(X)/(X)ID	HM60060-(X)CR	606(XX)R	RM60060-(X)CR	(R)6F60A(X)(XX)	HM60060-(X)CR
LFH60100(X)/(X)ID	HM60100-(X)CR***	610(XX)R	RM60100-(X)CR***	R6F100A(X)B	HM60100-(X)CR***
LFH60200(X)/(X)ID	HM60200-(X)CR***	620(XX)R	RM60200-(X)CR***	6F200A(X)BE	HM60200-(X)CR***
LFH60400(X)/(X)ID	HM60400-(X)CR***	640(XX)R	RM60400-(X)CR***	R6F400A(X)B	HM60400-(X)CR***
LFH60600(X)/(X)ID	HM60600-(X)CR***	66(XX)R	RM60600-(X)CR***	6F600A(X)B	HM60600-(X)CR***
LFPSJ30(X)/(X)ID	CH30J(X)/(X)I	US3J(X)/(X)I	CH30J(X)/(X)I	6SJ30A(X)/(X)I	CH30J(X)/(X)I
LFPSJ60(X)/(X)ID	CH60J(X)/(X)I	US6J(X)/(X)I	CH60J(X)/(X)I	6SJ60A(X)/(X)I	CH60J(X)/(X)I
LPHV	CHPV	USPV	CHPV	6SC30A(X)-C/(X)I-C	CHCC(X)DU/(X)DIU
LPSC00(X)/(X)ID	CHCC(X)DU/(X)DIU	USCC(X)/(X)I	CHCC(X)DU/(X)DIU	6SM30A(X)-C/(X)I-C	CHM(X)DU/CHM(X)DIU
LPSM00(X)/(X)ID	CHM(X)DU/CHM(X)DIU	USM(X)/(X)I	CHM(X)DU/CHM(X)DIU		

*** Finger-safe covers are available for this block along with optional open fuse indication.

1. Some competitor blocks are adder blocks and/or have multiple terminal offerings for Cu/Al or Cu only conductors.
2. Wire ranges are not always the same. Please assure wire range is suitable for the application.
3. All blocks listed have a box lug for wire termination. Alternate connection types are available in the 30 and 60 amp range. If an alternate type is required, please see the appropriate Bussmann series product data sheet for catalog number and ordering information.

Catalog number index

For information on products not contained in this catalog, contact Customer Satisfaction, toll-free, at 855-287-7626 (855-BUSSMANN) between 7:00 a.m. — 6:00 p.m. Central time, M-F, or email BussCustSat@Eaton.com.

Catalog no.	Page
_CIF06	5-4
_CIF21	5-4
_CIH07	5-5
_CIK07	5-5
_CIL14	5-5
_CT	4-17
_D125	5-9
_D16	5-9
_D27	5-9
_D33	5-9
_EET	4-17
_ET	4-17
_FE	4-17
_FEE	4-17
_FM	4-19
_FMM	4-19
_H07C	5-6
_K07CR	5-6
_L09C	5-6
_L14C	5-6
_LCT	4-15
_LET	4-15
_LMMT	4-16
_LMT	4-16
_M09C	5-6
_M14C	5-6
_MMT	4-19
_MT	4-19
_NHG000B	5-10
_NHG000B-690	5-11
_NHG00B	5-10
_NHG00B-690	5-11
_NHG01B	5-10
_NHG02B	5-10
_NHG03B	5-10
_NHG0B	5-10
_NHG1B	5-10
_NHG1B-690	5-11
_NHG2B	5-10
_NHG2B-690	5-11
_NHG3B	5-10
_NHG3B-690	5-11
_NHG4B	5-10
_NHG4B-690	5-11
_NZ01	5-9
_NZ02	5-9
_P11C	5-6
_R11C	5-6
11675-_	9-17
11725-_	9-17
12ABCNA_	7-26
12CAV_	7-26
12TDLEJ	7-32
12THLEJ	7-32
12TKLEJ	7-32
12TXLEJ	7-32
14002-_	9-17
14004-_	9-17
15.5CAV_E	7-26
15.5CAVH_E	7-26
15087	14-10
15100-_	14-7
15188	10-6
15188J-2-J	10-6
155GXQSJ_E	7-21
15800-_	14-5
15BHLE-_E	7-18
15CLE-_E	7-15
15CLE-_E-D	7-15
15CLE-_M-C	7-15
15CLE-_M-D	7-15
15CLE-_M-E	7-15
15CLPT-_E	7-26
15CLPT-_M-A	7-29
15CLPT-_M-B	7-29
15HCL-_E	7-18
15HLE-_E	7-15
15HLE-_M-C	7-15
15HLE-_M-D	7-15
15HLE-_M-E	7-15
15KU_	7-33
15LHLE-_E	7-15
15NCLPT-_E-A	7-26
15NCLPT-_E-B	7-26
15SBR_	7-33
15TB_	7-33
15XAD_	7-33
160_	9-9, 15
162_	9-9, 13, 15
163_	9-9, 13, 15
164_	9-9
165_	9-9, 13, 15
17.5ABGNA_	7-26
17.5CAV_	7-26
17.5TDLSJ	7-32
17.5TDMEJ	7-32
17.5TFLSJ	7-32
17.5THMEJ	7-32
17.5TKMEJ	7-32
170H0069	4-78
170H023_	8-40
170H0235	4-78
170H0236	4-78, 6-5, 11
170H0237	4-78
170H0238	4-78, 6-5, 11
170H1007	4-76
170H1013	4-76
170H3003	4-77
170H3004	4-77
170H3005	4-77
170H3006	4-77
170M_	†
175GDMSJ_E	7-21
175GFMSJ_E	7-21
175GXMSJ_E	7-21
175GXQSJ_E	7-21
1A0065	7-3, 7, 11, 22, 23, 25, 36
1A1119-_	3-15
1A1120-_	3-15
1A1706-_	14-10
1A1837	7-26
1A1907-_	3-15
1A2294	8-47
1A3398-07-R	3-15
1A3399-_	3-14
1A3400-_	3-16
1A4533-_	3-15
1A4534-_	3-15
1A5018-_	3-14
1A5600	2-14
1A5601	3-14
1A5602	3-14
1A5778	2-14
1A5779	2-14
1A5780	2-14
1BS10_	4-14, 8-39
20BS	5-15
20LSC	5-15
24ABGNA_	7-26
24CAV_	7-26
24TDMEJ	7-32
24TFMEJ	7-32
24THMEJ	7-32
24TXMEJ	7-32
258GDQSJ_E	7-21
258GXQSJ_E	7-21
258GXZSJ_E	7-21
25CLPT-_E	7-26
25CLPT-_M-A	7-29
25KU_	7-33
25SBR_	7-33
25TB_	7-33
25XAD_	7-33
270303	7-20, 36
2778	2-2
2837	2-2
2838	2-2
2A066_	8-49, 51, 53
2A1910-_	15-4
2ACLS-_R	7-22
2BCLS-_R	7-22
2CLE-_E	7-3
2CLE-_M-C	7-3
2CLE-_M-D	7-3, 22
2CLE-_M-E	7-3, 22
2CLS-_R	7-22
2HCLS-_R	7-22
2NCLPT-_	7-26
3.6ABCNA_	7-26
3.6ABWNA_	7-26
3.6ADLSJ	7-32
3.6ADOSJ	7-32
3.6CAV_	7-26
3.6WDFHO	7-31
3.6WDLSJ	7-31
3.6WDOH6	7-31
3.6WDOSJ	7-32
3.6WFFHO	7-31
3.6WFLSJ	7-31
3.6WFOH6	7-31
3.6WFOSJ	7-32
3.6WJON6	7-31
3.6WKFHO	7-31
3.6WKLSJ	7-32
32BS	5-15
32LSCC	5-15
36ABGNA_	7-26
36CAV_	7-26
36TDQSJ	7-32
36TFQSJ	7-32
36TXQEJ	7-32
3723	8-14
3742	8-14
3743	8-14
3828-_	8-5
38CAV_E	7-26
38CAVH_E	7-26
38CLPT-_E	7-26
38CLPT-_M-A	7-29
38GFZSJ_E	7-21
4164	2-4
4164-FR	2-4
4393-_	8-5
4421	8-14
4515	8-14
4520-_	8-5
46KU_	7-33
46SBR_	7-33
46TB_	7-33
46XAD_	7-33
5.5ABWNA_E	7-26
5.5AMWNA_E	7-26
5.5CAV_E	7-26
5.5CAVH_E	7-26
5.5VFNHA	7-31
5.5VKNHA	7-31
5592-01	3-16
55GDMSJ_E	7-21
55GFMSJ_E	7-21
5674-_	3-16
5681-01	3-16
5682-_	3-16
5960-_	3-16
5ACLS-_R	7-23
5ACLS-30	7-23
5AHLE-_E	7-8
5BCLS-_R	7-23
5BCLS-30	7-23
5BHCL-_E	7-8
5BHLE-_E	7-8
5CLE-_E	7-5, 8
5CLE-_E-D	7-5
5CLE-_M-C	7-5
5CLE-_M-D	7-5, 23
5CLE-_M-E	7-5, 23
5CLPT-_E	7-26
5CLPT-_M-A	7-29
5CLS-_R	7-23
5CLS-30	7-23
5HCL-_E	7-8
5HCLS-_R	7-23
5HCLS-30	7-23
5HLE-_E	7-5
5HLE-_M-C	7-5
5HLE-_M-D	7-5, 23
5HLE-_M-E	7-5, 23
5LCLS-_R	7-23
5MCLS-_R-_A	7-23
5MCLS-_R-_B	7-23
5NCLPT-_E	7-26
5NCLPT-_E-A	7-26
5TPH	15-4
60/100BS	5-15
63/100LSC	5-15
64200	2-3
64300	2-3
68300	2-3
68600	2-3
7.2ABCNA_	7-26
7.2ABWNA_	7-26

† Due to the many sizes, AC and DC voltage ratings, amp ratings and standards associated with the 170M high speed fuse catalog number prefix, please see the high speed fuse section table of contents to locate your specific fuse.

Catalog number index

For information on products not contained in this catalog, contact Customer Satisfaction, toll-free, at 855-287-7626 (855-BUSSMANN) between 7:00 a.m. — 6:00 p.m. Central time, M-F, or email BussCustSat@Eaton.com.

Catalog no.	Page
7.2AMWNA_E	7-26
7.2CAV_	7-26
7.2TDLSJ	7-32
7.2TFLSJ	7-32
7.2WFMSJ	7-31
7.2WFNHO	7-31
7.2WKMSJ	7-31
7.2WKNHO	7-31
70_-_A	14-10
72_	14-10
72KU_	7-33
72SBR_	7-33
72TB_	7-33
72XAD_	7-33
7BCLS-_R	7-25
8ACLS-_R	7-25
8AHLE-_E	7-13
8BHLE-_E	7-13
8CLE-_E	7-11
8CLE-_M-C	7-11
8CLE-_M-D	7-5, 23
8CLE-_M-E	7-11
8CLPT-_E-A	7-26
8CLPT-_M-A	7-29
8CLPT-_M-B	7-29
8CLS-_R	7-25
8HCL-_E	7-13
8HLE-_E	7-11
8HLE-_M-C	7-11
8HLE-_M-D	7-5, 25
8HLE-_M-E	7-11
8NCLPT-_E	7-26
8NCLPT-_E-A	7-26
8NCLPT-_E-B	7-26
9078A67G04	"7-3, 7, 11, 22, 23, 25, 36
9435-1/2	8-42
9732	8-42
9838	8-48
9841	8-48
A	2-11
A3354710	7-3, 7, 11, 36
A3354730	7-3, 7, 11, 22, 23, 25, 36
A3354745	7-20, 36
AAO-_	5-7
ABC-_-R	3-9
ABC-V-_-R	3-9
AC-_	5-8
AD-_	5-8
AGA-_	3-7
AGC-_-R	3-9
AGC-V-_-R	3-9
AGW-_	3-8
AGX-_	3-8
AL-D	4-37
ANL-_	2-4
ANN-_	2-4
AT512	10-4
ATC-_	2-13
ATC-FHID	2-14
ATM-_	2-12
ATM-_LP	2-12
ATM-FHID	2-14
ATR-_	2-12
B	10-11, 13, 15
B221-_	12-6
B222-_	12-6
BAC0_	11-56, 58, 60, 62, 64, 67, 73, 75, 77, 82, 86, 88, 90
BAC1_	11-75, 77, 88
BAC-HOLDER2	11-56
BAF-_	2-5
BAO-_	5-7
BB1P100M_	8-10
BB3P100M_	8-10
BBS-_	2-7
BC-_	5-8
BCCMM603-3_	8-6
BCM603-_	8-6
BD-_	5-8
BG301_	8-15
BG302_	8-15
BG303_	8-15
BH-0_	4-14, 8-39
BH-1_	4-14, 8-39
BH-2_	4-14, 8-39
BH-3-_	4-14, 8-39
BK	8-42
BK	8-42
BK	8-43
BK	8-44
BMM603-_	8-6
BNQ21-_	10-8
BOOT-KCM	2-3
BOOT-KDM	2-3
BPVM-_	6-9
BQE	10-8
BQQ41-_	10-8
BRKT-ANGL	10-20
BRKT-FLT	10-20
BRKT-ND	10-20
BRKT-NDSCRW	10-20
BRKT-NDSCRW2	10-20
BRKT-NDSCRW3	10-20
BS	10-13, 15
BSPA_	13-6
BSPA-FLUSHPLT_	13-7
BSPD_	13-10
BSPD_DING_	13-28
BSPD48RJ45	13-27
BSPH2A_ _ _ _LVR	13-25
BSPM1A_ _ _ _LV(R)	13-23
BSPMA1_S2GR	13-15
BSPMA2_S3GR	13-17
BSPMA3_DLGR	13-19
BSPMA3_WYGR	13-19
BSPMA4_WYNGR	13-21
BVL50	6-5, 11, 8-40
C10G_	5-13
C10M_	5-14
C14G_	5-13
C14M_	5-14
C22G_	5-13
C22M_	5-14
C30BS	5-15
C30F	5-15
C30FBS	5-15
C515-_-R	3-2
C517-3-R	3-3
C518-_-R	3-2
C519-_-R	3-2
C520-_-R	3-2
C5268-_	4-14, 8-39
C60BS	5-15
C60F	5-15
C60FBS	5-15
C7021-_	10-9
CCP2-_-30CC	11-39
CCP2-_-30M	11-39
CCP2-_-CF	11-2, 5, 9
CCP2-1-DCC	11-39
CCP2-1-DCM	11-39
CCP2-AUX	11-19, 45
CCP2-AUX-100	11-19
CCP2-AUX-S	11-20
CCP2B-_-_CF	11-36
CCP2-CWK2	1-14, 11-10
CCP2-FLC1-_	11-17
CCP2-FLC2-_	11-17
CCP2-FLR1_	11-17
CCP2-FLR2_	11-17
CCP2-H4X-_	11-15, 44
CCP2-HEX	11-18
CCP2-L2-1	1-14, 11-10
CCP2-L2-1A	1-14, 11-10
CCP2-L4-1	1-14, 11-10
CCP2-L4-1A	1-14, 11-10
CCP2-L4B-3	1-14, 11-10
CCP2-L4B-3A	1-14, 11-10
CCP2-MW1-3	11-13, 43
CCP2-MW1-6	11-13
CCP2-MW2-3	1-14, 11-10
CCP2-MW2-3	1-14, 11-10
CCP2-MW2-3	11-14
CCP2-MW2-6	1-14, 11-10
CCP2-MW2-6	1-14, 11-10
CCP2-MW2-6	11-14
CCP2-MW6-6	11-14
CCP2-NFPA-_	11-16, 44
CCP2-PB_	11-18
CCP2-PB2	1-14, 11-10
CCP2-PB6	1-14, 11-10
CCP2-PLC-100	11-21
CCP2-PLC-IND	11-21, 46
CCP2R-_-_CF	11-5
CCP2R-_-30CC	11-39
CCP2R-_-30M	11-39
CCP2RL-_-_CF	11-5
CCP2RL-_-30CC	11-39
CCP2RL-_-30M	11-39
CCP2-RM_	11-18
CCP2S-_-_CF	11-5
CCP2S-_-30CC	11-39
CCP2S-_-30M	11-39
CCP2-SH_-_	11-16, 44
CCP2SL-_-_CF	11-5
CCP2SL-_-30CC	11-39
CCP2SL-_-30M	11-39
CCP2-SM	11-18
CCP2-TS_-3	11-18
CCP2-TS2-3	1-14, 11-10
CCP2-TS6-3	1-14, 11-10
CCPLP-_-20G-S	11-53
CCPLP-_-30CC-S	11-53
CCPLP-_-30M-S	11-53
CD-_	5-8
CDN-_	5-2
CDS-_	5-2
CEO-_	5-7
CFP-_	15-3
CGL-_	5-3
CH_J_	8-28
CH14_	8-16
CH14_DIU	4-37
CH14_DMSU-F	4-37
CH14_DNIU	4-37
CH14_DNU	4-37
CH14_DU	4-37
CH14-_PS	8-16
CH141DNXU	4-37
CH143DNMSU-F	4-37
CH14-CTP	8-16
CH14-IP20	4-37
CH14-L	4-37
CH14-MS1	4-37
CH14-MS3	4-37
CH14-P	4-37
CH22_	8-17
CH22_DIU	4-37
CH22_DMSU-F	4-37
CH22_DNIU	4-37
CH22_DNU	4-37
CH22_DU	4-37
CH22-_PS	8-17
CH221DNXU	4-37
CH223DNMSU-F	4-37
CH22-CTP	8-17
CH22-IP20	4-37
CH22-L	4-37
CH22-MS1	4-37
CH22-MS3	4-37
CHCC_D_U	8-8
CHCC1DI-48U	8-8
CHM_D_U	8-8
CHM_DIU	4-36
CHM_DN_U	8-8
CHM_DNU	4-36
CHM_DU	4-36
CHM1DNXU	4-36
CH-PLC2	8-11
CHPV_U	6-8, 8-8
CHPV14_	8-16
CHPV15L85	6-10
CHSF-_	4-3
CL1	4-21
CLE-_-C	7-3, 5, 11, 15
CLE-_-D	7-3, 5, 11, 15
CLE-_-E	7-3, 5, 11, 15
CLPT-_E-B	7-26
CLPT-_L	7-29
CM_CF	5-15
CPB160-_	9-9
CPB162-_	9-6, 9, 13
CPDB-_	9-6, 9, 13
CPDB165	9-9, 13
CVR_-CCM	8-6
CVR_-CCM-QC	8-6
CVR_-J-60030	8-32
CVR_-J-60060	8-18, 32, 34
CVR_-J-60100-M	8-32, 34
CVR_-J-60200-M	8-32, 34
CVR_-J-60400-M	8-32, 34
CVR_-J-60600-M	8-32
CVR_-RH-25030	8-19
CVR_-RH-25060	8-19, 25, 27
CVR_-RH-25100	8-20, 23

Catalog number index

For information on products not contained in this catalog, contact Customer Satisfaction, toll-free, at 855-287-7626 (855-BUSSMANN) between 7:00 a.m. — 6:00 p.m. Central time, M-F, or email BussCustSat@Eaton.com.

Catalog no.	Page
CVR_-RH-25200	8-20, 23
CVR_-RH-25400	8-20, 23
CVR_-RH-25600	8-20, 23
CVR_-RH-60030	8-19, 22
CVR_-RH-60060	8-19, 22, 25, 27
CVR_-RH-60100	8-20, 23
CVR_-RH-60200	8-20, 23
CVR_-RH-60400	8-20, 23
CVR_-RH-60600	8-20, 23
CVR-CCM	6-9, 8-6
CVRI-CCM	6-9, 8-6
DD-_	5-8
DD1-J	10-16
DD2HB-J	10-16
DD2-J	10-16
DD3-J	10-16
DEO-_	5-7
DFJ-_	4-4
DIR-0_	11-56, 58, 60, 62, 64, 66, 69, 73, 75, 77, 81
DOOR-508	11-81
DRA-1	15-4
DRL35MM_	10-20
EC-250	4-21
EC-600	4-21
ECAP1P	8-10
ED-_	5-8
EF-_	5-8
EFS-_	5-8
ER1-100J3PB	11-85
ER1-100N3PB	11-87
ER1-1200N3PB	11-87
ER1-16N_PB	11-89
ER1-200J3PB	11-85
ER1-200N3PB	11-87
ER12-100J3PB	11-85
ER12-100N3PB	11-87
ER12-1200N3PB	11-87
ER12-16N_PB	11-89
ER12-200J3PB	11-85
ER12-200N3PB	11-87
ER12-25N_PB	11-89
ER12-30J3PB	11-85
ER12-30N3PB	11-87
ER12-400J3PB	11-85
ER12-400N3PB	11-87
ER12-40N_PB	11-89
ER1-25N_PB	11-89
ER12-600J3PB	11-85
ER12-600N3PB	11-87
ER12-60J3PB	11-85
ER12-60N3PB	11-87
ER12-63N_PB	11-89
ER12-800L3PB	11-85
ER12-800N3PB	11-87
ER12-80N_PB	11-89
ER1-30J3PB	11-85
ER1-30N3PB	11-87
ER1-400J3PB	11-85
ER1-400N3PB	11-87
ER1-40N_PB	11-89
ER1-600J3PB	11-85
ER1-600N3PB	11-87
ER1-60J3PB	11-85
ER1-60N3PB	11-87
ER1-63N_PB	11-89
ER1-800L3PB	11-85
ER1-800N3PB	11-87
ER1-80N_PB	11-89
ER3R-100J3PB	11-85
ER3R-100N3PB	11-87
ER3R-1200N3PB	11-87
ER3R-16N_PB	11-89
ER3R-200J3PB	11-85
ER3R-200N3PB	11-87
ER3R-25N_PB	11-89
ER3R-30J3PB	11-85
ER3R-30N3PB	11-87
ER3R-400J3PB	11-85
ER3R-400N3PB	11-87
ER3R-40N_PB	11-89
ER3R-600J3PB	11-85
ER3R-600N3PB	11-87
ER3R-60J3PB	11-85
ER3R-60N3PB	11-87
ER3R-63N_PB	11-89
ER3R-800L3PB	11-85
ER3R-800N3PB	11-87
ER3R-80N_PB	11-89
ER4-100J3PB	11-85
ER4-100N3PB	11-87
ER4-1200N3PB	11-87
ER4-16N_PB	11-89
ER4-200J3PB	11-85
ER4-200N3PB	11-87
ER4-25N_PB	11-89
ER4-30J3PB	11-85
ER4-30N3PB	11-87
ER4-400J3PB	11-85
ER4-400N3PB	11-87
ER4-40N_PB	11-89
ER4-600J3PB	11-85
ER4-600N3PB	11-87
ER4-60J3PB	11-85
ER4-60N3PB	11-87
ER4-63N_PB	11-89
ER4-800L3PB	11-85
ER4-800N3PB	11-87
ER4-80N_PB	11-89
ER4P-100J3PB	11-85
ER4P-100N3PB	11-87
ER4P-16N_PB	11-89
ER4P-200J3PB	11-85
ER4P-200N3PB	11-87
ER4P-25N_PB	11-89
ER4P-30J3PB	11-85
ER4P-30N3PB	11-87
ER4P-400J3PB	11-85
ER4P-400N3PB	11-87
ER4P-40N_PB	11-89
ER4P-600J3PB	11-85
ER4P-600N3PB	11-87
ER4P-60J3PB	11-85
ER4P-60N3PB	11-87
ER4P-63N_PB	11-89
ER4P-800L3PB	11-85
ER4P-800N3PB	11-87
ER4P-80N_PB	11-89
ER4X-100J3PB	11-85
ER4X-100N3PB	11-87
ER4X-1200N3PB	11-87
ER4X-16N_PB	11-89
ER4X-200J3PB	11-85
ER4X-200N3PB	11-87
ER4X-25N_PB	11-89
ER4X-30J3PB	11-85
ER4X-30N3PB	11-87
ER4X-400J3PB	11-85
ER4X-400N3PB	11-87
ER4X-40N_PB	11-89
ER4X-600J3PB	11-85
ER4X-600N3PB	11-87
ER4X-60J3PB	11-85
ER4X-60N3PB	11-87
ER4X-63N_PB	11-89
ER4X-800L3PB	11-85
ER4X-800N3PB	11-87
ER4X-80N_PB	11-89
ESD-_	5-7
FBI	3-13
FBM	3-13
FCF_RN	1-10
FEH	5-12, 6-11, 8-40
FEH1500	6-10
FF-_	5-8
FG-_	5-8
FL11H_	7-34
FL11K_	7-34
FL11T_	7-34
FL12K_	7-34
FL3K_	7-34
FL3T_	7-34
FLC-	11-58, 60, 62, 64, 66
FLH_	11-58, 60, 62, 64, 66
FLMC	11-58, 60, 62, 64, 66
FLMR	11-58, 60, 62, 64, 66
FNA-_	2-9
FNM-_	2-6
FNQ-_	2-7
FNQ-R-_	1-6
FP-_	15-3
FRN-R-_	1-29
FRN-R-_ID	1-29
FRS-R-_	1-29
FRS-R-_ID	1-29
FSCVR	8-10
FT-_	15-3
FWA-_A	4-6
FWA-_A10F	4-22
FWA-_A21F	4-22
FWA-_AH	4-5
FWA-_B	4-6
FWC-_A10F	4-26
FWH-_A	4-8
FWH-_A14F	4-25
FWH-_A6F	4-24
FWH-_B	4-8
FWH5-_A6F	4-24
FWJ-_A	4-13
FWJ-_A14F	4-33
FWK-_20F	4-32
FWK-_A25F	4-32
FWL-_A20F	4-34
FWL-_A20FI	4-34
FWP-_A	4-11
FWP-_A14F	4-28
FWP-_A14FI	4-28
FWP-_A22F	4-30
FWP-_A22FI	4-30
FWP-_B	4-11
FWP-_G10F	4-27
FWP-_G14F	4-29
FWP-_G14FI	4-29
FWP-_G22F	4-31
FWP-_G22FI	4-31
FWS-_A20F	4-35
FWS-_A20FI	4-35
FWX-__AH	4-7
FWX-_A	4-7
FWX-_A14F	4-23
G30060-_	8-15
GBA-_	2-8
GBB-_-R	3-10
GBB-V-_-R	3-10
GDA-_	3-4
GDB-_	3-3
GDC-_	3-5
GF-_	5-8
GG-_	5-8
GH-_	5-8
GLD-_	2-8
GLP	5-15
GLQ-_	2-10
GLR-_	2-11
GMA-_-R	3-6
GMA-V-_-R	3-6
GMC-_-R	3-6
GMC-V-_-R	3-6
GMD-_-R	3-7
GMD-V-_-R	3-7
GMF-_	2-11
GMQ-_	2-10
GMT-_A	14-11
GMT-A	14-11
GND-_-_	11-82
GRF-_	2-11
H12-03_	11-62, 64, 66
H12-05_	11-56, 58, 60
H12X-03_	11-75
H15-H-1	3-12
H15-V-1	3-12
H4X-01_	11-73, 81
H4X-02_	11-81
H4X-03_	11-73, 81
H4X-04_	11-56
H4X-05_	11-56, 58, 60
H4X-06_	62, 64, 66, 75
H4X-07_	11-69, 77
H4X-08_	11-77
H79-_	11-56, 58, 60, 64, 67, 69
HBH-I	3-13
HBH-M	3-13
HBV-I	3-13
HBV-M	3-13
HBW-I	3-13
HBW-M	3-13
HCL-NL-1	7-8, 13, 18
HEB-_	8-51
HEC-_	8-49
HEG-_	8-49
HEH-_	8-49
HEJ-_	8-49
HET	8-49, 51, 53
HEX-_	8-53
HEY-_	8-53

Catalog number index

For information on products not contained in this catalog, contact Customer Satisfaction, toll-free, at 855-287-7626 (855-BUSSMANN) between 7:00 a.m. — 6:00 p.m. Central time, M-F, or email BussCustSat@Eaton.com.

Catalog no.	Page
HEZ-_	8-52
HFA-_	8-46
HFB-_	8-47
HH_	8-48
HH2	2-14
HHB-_	8-47
HHC	2-14
HHD	2-14
HHF	2-14
HHG	2-14
HHL	2-14
HHM	2-14
HHR	2-14
HHS	2-14
HHT	8-46
HHU	2-14
HHV	2-14
HHX	2-14
HJL	8-42
HK_	8-42
HKP-_	8-42
HLD-_	8-43
HLQ-_	2-10
HLR	2-11
HLR-2A	2-11
HLS_	14-11
HLT_	14-11
HM_	8-48
HM25030-_	8-19
HM25060-_	8-19
HM25060-_MW_	8-25
HM25100-_	8-20
HM25200-_	8-20
HM25400-_	8-20
HM25600-_	8-20
HM60030-_	8-19
HM60060-_	8-19
HM60060-_MW_	8-25
HM60100-_	8-20
HM60200-_	8-20
HM60400-_	8-20
HM60600-_	8-20
HPC-D	8-43
HPD	8-44
HPF-_	8-43
HPG-_	8-44
HPM-_	8-44
HPS-_	8-45
HPS2	8-45
HPV-D15V-4A	6-4
HPV-DV-_A	6-4
HR_	8-48
HR60060-_MW_	8-27
HRK-R	8-48
HTB-_-	8-41
HTC-140M	3-14
HTC-150M	3-14
HTC-15M	3-14
HTC-200M	3-14
HTC-210M	3-14
HTC-60M	3-12
HVA_	7-30
HVB_	7-30
HVJ_	7-30
HVL_	7-30
HVR	7-30
HVT_	7-30
HVU_	7-30
HVW_	7-30
HVX_	7-30
J101	10-11
J-13	15-2
J15188	10-6
J-16	15-2
J201	10-13
J-21	15-2
J-26	15-2
J301	10-15
J-41	15-2
J-42	15-2
J-62	15-2
J-63	15-2
J-64	15-2
JCH-_R	7-22
JCK-_R	7-22
JCK-A-_R	7-22
JCK-B-_R	7-22
JCL-_R	7-23
JCL-A-_R	7-23
JCL-B-_R	7-23
JCW-_	7-26
JCX-_E	7-3
JCY-_E	7-5
JF1	8-11
JJN-_	1-31
JJS-_	1-31
JKS-_	1-20
JKS-_-700	5-11
JM60030-_	8-32
JM60030-_MW_	8-34
JM60060-_	8-32
JM60060-_MW_	8-34
JM60100-_	8-32
JM60100-_MW_	8-34
JM60200-_	8-32
JM60200-_MW_	8-34
JM60400-_	8-32
JM60400-_MW_	8-34
JM60600-_	8-32
JM70100-_	8-18
JM70100-_CR	4-36
JM70100-_MW14	8-18
JN1	10-2, 3, 6
JN2	10-4
JN3	10-4, 6, 7
JN4	10-2, 7
JN512	10-4
JNDN3	10-2
JNSE3	10-5
JNSS3	10-5
JP60030-3_	8-30
JT60030	8-29
JT60060	8-29
JTN60030	8-29
JTN60060	8-29
JU12	10-19
JV-L	8-16, 17
KAC-_	4-9
KAD	10-7
KAZ	2-9
KBC-_	4-10
KCA	2-3
KCB	2-3
KCC	2-3
KCD	2-3
KCE	2-3
KCF	2-3
KCH	2-3
KCJ	2-3
KCM	2-3
KCR	2-3
KCS	2-3
KCV	2-3
KCY	2-3
KCZ	2-3
KDA	2-3
KDB	2-3
KDC	2-3
KDD	2-3
KDE	2-3
KDF	2-3
KDH	2-3
KDJ	2-3
KDM	2-3
KDP	2-3
KDR	2-3
KDT	2-3
KDU	2-3
KDY	2-3
KEW	2-3
KEX	2-3
KFH-A	2-3
KFM	2-3
KFT	2-3
KFZ	2-3
KIG	2-3
KIT-6POLE	11-82
KLM-_	2-6
KLU-_	1-24
KPF	2-3
KQO	2-3
KQT	2-3
KQV	2-3
KRP-C-_SP	1-22
KRP-CL-_	1-23
KT_	10-7
KTK-_	2-5
KTK-R-_	1-7
KTN-R-_	1-27
KTS-R-_	1-27
KTU-_	1-23
KU_	10-19
LP-CC-_	1-5
LPJ-_SP	1-19
LPJ-_SPI	1-19
LPN-RK-_SP	1-24
LPN-RK-_SPI	1-24
LPS-RK-_SP	1-24
LPS-RK-_SPI	1-24
LUG_-_	11-66, 69, 75, 77
MAI	4-21
MAX-_	2-13
MAX-FHID	2-14
MB-_	1-35
MBI	4-21
MC-250	4-21
MC-600	4-21
MDA-_-R	3-11
MDA-V-_-R	3-11
MDL-_-R	3-10
MDL-V-_-R	3-10
MDQ--R	3-11
MDQ-V-_-R	3-11
MIC-_	2-8
MIS-_	2-9
MT12-1-2	10-2, 3, 4, 5, 6, 7
MTC6	10-2, 7
MTMU_	10-19
MV055F_	7-5
MV155F_	7-15
N512-_	10-4
NC3-_	10-5
NDN_	10-2, 3
NDNF1-WH	8-11
NFT_	10-4
NFTA	10-20
NITD-_	5-7
NNB	15-3
NNB-R	15-3
NNC	15-3
NO.1	15-4
NO.2	15-4
NO.213	15-2
NO.213-R	15-2
NO.216	15-2
NO.216-R	15-2
NO.226	15-2
NO.226-R	15-2
NO.242-R	15-2
NO.2621	15-2
NO.2621-R	15-2
NO.263	15-2
NO.263-R	15-2
NO.2641	15-2
NO.2641-R	15-2
NO.2642	15-2
NO.2661	15-2
NO.2661-R	15-2
NO.2662	15-2
NO.2662-R	15-2
NO.2664	15-2
NO.2664-R	15-2
NO.4	15-4
NO.5	15-4
NO.6	15-4
NO.616	15-2
NO.616-R	15-2
NO.626	15-2
NO.626-R	15-2
NO.642-R	15-2
NO.663	15-2
NO.663-R	15-2
NO.7	15-4
NO.8	15-4
NON-_	1-21
NOS-_	1-21
NRA	10-20
NSD-_	5-7
NSE3-_	10-5
NSS3-_	10-5
NTN-R-_	15-3
NTRL-_-_	11-82
NTS-R-_	15-3
NUC	10-19
NUE	10-19

Catalog number index

For information on products not contained in this catalog, contact Customer Satisfaction, toll-free, at 855-287-7626 (855-BUSSMANN) between 7:00 a.m. — 6:00 p.m. Central time, M-F, or email BussCustSat@Eaton.com.

Catalog no.	Page
NUM_	10-19
OJ_	10-11, 13, 15, 18
OPM-1038_	8-12
OPM-NG-S_	8-13
OSD-_	5-7
P	10-13
P-_	1-34
PCT	14-11
PDB_	9-6
PDBFS_	9-3
PF1-_	8-11, 15
PLU_	10-6
PMP-_	12-5
POLE-_	11-82, 90
POLE98-_	11-73
PON-_	5-2
PS_	12-5
PSU1-_	10-7
PTFB-2500-JCD	7-26
PV-_A-01XL	6-7
PV-_A-01XL-15	6-7
PV-_A-01XL-B	6-7
PV-_A-01XL-B-15	6-7
PV-_A10F85L	6-6
PV-_A14F	6-4
PV-_A-1XL	6-7
PV-_A-1XL-15	6-7
PV-_A-1XL-B	6-7
PV-_A-1XL-B-15	6-7
PV-_A-2XL	6-7
PV-_A-2XL-15	6-7
PV-_A-2XL-B	6-7
PV-_A-2XL-B-15	6-7
PV-_A-3L	6-7
PV-_A-3L-15	6-7
PV-_A-3L-B	6-7
PV-_A-3L-B-15	6-7
PV-_ANH1	6-5
PV-_ANH1-B	6-5
PV-_ANH2	6-5
PV-_ANH2-B	6-5
PV-_ANH3	6-5
PV-_ANH3-B	6-5
PV15M-4A-CT	6-6
PV-1A10-1P	6-3
PV-1A10-2P	6-3
PV-1A10F	6-3
PV-1A10F-CT	6-3
PV-1A10-T	6-3
PVM-_	6-2
PVS-R-_	6-2
PWR1PLP	8-10
PWR35MM	8-10
PWR50MM	8-10
QC_	10-11, 13, 15
QC_-J	10-11, 13, 15
QSCP	12-2
RD1000-3	11-71, 72
RD1000-4	11-71, 72
RD100-3	11-71, 72
RD100-3-SCCR	11-71, 72
RD1200-3	11-71, 72
RD1200-4	11-71, 72
RD16-3-508	11-79
RD200-3	11-71, 72
RD200-4	11-71, 72
RD25-3-508	11-79
RD30-3	11-71, 72
RD400-3	11-71, 72
RD400-4	11-71, 72
RD40-3-508	11-79
RD600-3	11-71, 72
RD600-4	11-71, 72
RD60-3	11-71, 72
RD63-3-508	11-79
RD800-3	11-71, 72
RD800-4	11-71, 72
RD80-3-508	11-79
RDF100J-2	11-55
RDF100J-3	11-55
RDF100J-4	11-55
RDF200J-2	11-55
RDF200J-3	11-55
RDF200J-4	11-55
RDF30CC-3	11-55
RDF30CC-3N	11-55
RDF30J-2	11-55
RDF30J-3	11-55
RDF30J-3-COMP	11-55
RDF30J-3N-COMP	11-55
RDF30J-4	11-55
RDF400J-2	11-55
RDF400J-3	11-55
RDF400J-4	11-55
RDF600J-2	11-55
RDF600J-3	11-55
RDF600J-4	11-55
RDF60J-2	11-55
RDF60J-2-COMP	11-55
RDF60J-3	11-55
RDF60J-3-COMP	11-55
RDF60J-4	11-55
RDF60J-4-COMP	11-55
RDF800L-2	11-55
RDF800L-3	11-55
RDF800L-4	11-55
RM25030-_	8-22
RM25060-_	8-22
RM25060-_MW_	8-27
RM25100-_	8-23
RM25200-_	8-23
RM25400-_	8-23
RM25600-_	8-23
RM60030-_	8-22
RM60060-_	8-22
RM60100-_	8-23
RM60200-_	8-23
RM60400-_	8-23
RM60600-_	8-23
RS_	5-15
S-_	1-34
S500-_-R	3-3
S500-V-_-R	3-3
S501-_-R	3-4
S501-V-_-R	3-4
S505-_-R	3-4
S505H-_-R	3-5
S505H-V-_-R	3-5
S505SC-_-R	3-4
S505SCH-_-R	3-5
S506-_-R	3-5
S506-V-_-R	3-5
S-8001-_	8-4
S-8002-_	8-4
S-8101-_	8-4
S-8102-_	8-4
S-8201-_	8-4
S-8202-_	8-4
S-8203-_	8-4
S-8301-_	8-4
SA-_	1-35
SAMI-_	15-2
SB1XL-S	6-10
SB2XL-S	6-10
SB3L-S	6-10
SC-_	1-18
SCY	1-36
SD_-PB	6-11
SD_-SK	6-11
SD00-D	5-12, 8-40
SD00-PB	5-12, 8-40
SD00-SK	5-12
SD12-PB	5-12, 8-40
SD12-SK	5-12, 8-40
SD1-D	5-12, 8-40
SD1-D-PV	6-11
SD2-D	5-12, 8-40
SD2-D-PV	6-11
SD3-D	5-12, 8-40
SD3-D-PV	6-11
SD3-PB	5-12, 8-40
SD3-SK	5-12, 8-40
SD4-D	8-40
SD4-S	5-12
SD4-S1600	8-40
SDL-_	5-12, 6-11, 8-40
SFC-_	15-4
SH1-_	11-56
SH2-_	11-56
SH3-_	11-73, 81
SH4-_	11-73, 81
SH5-_	11-58, 60, 62, 64, 66
SH6-_	11-77
SH7-_	11-69
SH-GUIDE_	11-73, 75, 77, 81
SL-_	1-33
SOU	1-36
SOW	1-36
SOX	1-36
SOY	1-36
SOY-B	1-36
SP	10-11, 13, 15
SPP40SP_	13-4
SRU	1-36
SRW	1-36
SRX	1-36
SRY	1-36
SS	10-13
SSD-_	5-7
SSN	1-36
SSU	1-36
SSW	1-36
SSY	1-36
SSY-RL	1-36
ST	10-13, 15
STD-_	5-7
STY	1-36
T-_	1-34
T30030-_	8-35
T30060-_	8-35
T30100-_	8-35
T30200-_	8-35
T30400-_	8-35
T30600-_	8-35
T60030-_	8-37
T60060-_	8-37
T60100-_	8-37
T60200-_	8-37
T60400-_	8-37
T60600-_	8-37
TB100-_	10-10
TB200-_	10-12
TB300-_	10-14
TB345-_	10-14
TB400	10-18
TC-_	1-34
TCF_	1-8
TCF_RN	1-8
TCFH_N	1-12
TCFH_NW	1-12
TD00-D	5-12, 8-40
TD00-IP20	5-12
TD1-D	5-12, 8-40
TD1-D-PV	6-11
TD1-IP20	5-12
TD2-D	5-12, 8-40
TD2-D-PV	6-11
TD2-IP20	5-12
TD3-D	5-12, 8-40
TD3-D-PV	6-11
TD3-IP20	5-12
TI_	4-21
TL-_	1-33
TP158HC_	14-6
TP15900-_	14-4
TP15914_	14-4
TPA-_	14-5
TPA-B-_	14-5
TPC-_	14-2
TPCDS-_	14-2
TPCDS-D-_	14-2
TPHCS_-_	14-7
TPL-_	14-8
TPM-_	14-3
TPMDS-_	14-3
TPN-_	14-9
TPS-_	14-6
TPS-_L	14-6
TPS-_V	14-6
TPSFH-_	15-4
TSH_-_B	11-75, 88
TSH_-_T	11-75, 88
TSH_-_TB	11-67, 69, 73, 75, 77, 82, 86, 88, 90
UHA	2-3
UHJ-M	2-3
UHJ-T	2-3
UHJ-W	2-3
W-_	1-33
WCF_RN	1-11
W-DUMMY	1-33
X_	10-16, 17

Low-Peak™ Upgrade program and fuse inventory consolidation

The Low-Peak Upgrade program offers superior performance while reducing the number of SKUs that need to be in stock. Bussmann series Low-Peak fuses feature a high degree of current limitation to help provide the superior component protection and help mitigate arc flash hazard.

Listed below are fuse upgrades by branch circuit class.

The left column contains catalog symbols for Bussmann series and competitor products.

The right column contains the Low-Peak upgrade for consolidating and simplifying inventory.

To find out more about the advantages offered by the Low-Peak Upgrade program, visit Eaton.com/bussmannseries.

This is only a consolidated cross reference of the most common fuses. For a more extensive cross reference for fuses, please visit Eaton.com/bussmannseries/FuseFinder.

250 Volt Class R/H(K)

Fuse symbol	Low-Peak upgrade
A2D	**LPN-RK_SP**
A2D-R	
A2K	
A2K-R	
A2Y (Type 1)	
AT-DE	
CHG	
CRN-R (Type 3)	
CTN-R	
DEN	
DLN	
DLN-R†	
ECN	
ECN-R	
ERN	
FLN	
FLN-R	
FRN	
FRN-R	
FTN-R	
GDN	
HAC-R	
HB	
KLN-R	
KON	
KTN-R	
LENRK	
LKN	
LLN-RK	
LON-RK	
NCLR	
NLN	
NON	
NRN	
OTN	
REN††	
RFN	
RHN	
RLN	
TR	
655	
660	
10KOTN	
50KOTN	**LPN-RK_SP**

† Obsolete, must be replaced with a another electrically equivalent fuse.
††70 to 600 amp versions obsoleted. Must be replaced with a another electrically equivalent fuse.

600 Volt Class R/H(K)

Fuse symbol	Low-Peak upgrade
A6D	**LPS-RK_SP**
A6K-R	
A6X (Type 1)	
ATS-DE	
CHR	
CTS-R	
DES	
DES-R	
DLS	
DLS-R†	
ECS-R	
ERS	
FLS	
FLS-R	
FRS	
FRS-R	
FTS-R	
GDS	
HA	
KLS-R	
KOS	
KTS-R	
LES	
LES-R	
LES-RK	
LKS	
LLS-RK	
LOS-RK	
NLS	
NOS	
NRS	
OTS	
RES††	
RFS	
RHS	
RLS	
SCLR	
TRS	
TRS-R	
656	
10KOTS	
50KOTS	**LPS-RK_SP**

† Obsolete, must be replaced with a another electrically equivalent fuse.
††70 to 600 amp versions obsoleted. Must be replaced with a another electrically equivalent fuse.

Class CC and Midget

Fuse symbol	Low-Peak upgrade
A6Y (Type 2B)	**LP-CC**
ABU	
AGU	
ATDR	
ATM	
ATMR	
ATQ	
BAF	
BAN	
BLF	
BLN	
CCMR	
CM	
CMF	
CNM	
CNQ	
CTK	
CTK-R	
FLM	
FLQ	
FNM	
FNQ	
GGU	
HCLR	
KLK	
KLK-R	
KTK	
KTK-R	
MCL	
MEN	
MEQ	
MOF	
MOL	
OTM	
TRM	
6JX	**LP-CC**
*FNQ-R suggested on primary of control transformers.	
ATQR	
FNQ-R	**FNQ-R**
KLDR	

Class J

Fuse symbol	Low-Peak upgrade
A4J	**LPJ_SP**
AJT	
CJ	
CJS	
GF8B	
HRCXXJ	
J	
JA	
JCL	
JDL	
JFL	
JHC	
JKS	
JLS	
JTD	**LPJ_SP**

Class L

Fuse symbol	Low-Peak upgrade
A4BQ	**KRP-C_SP**
A4BT	
A4BY	
A4BY (Type 55)	
CLF	
CLL	
CLU	
HRC-L	
KLLU	
KLPC	
KLU	
KTU	
L	
LCL	
LCU	**KRP-C_SP**

The competitive fuse catalog symbols shown were derived from published information for various manufacturers. Because competitive products may differ from Bussmann series products, it is recommended that each selected product be checked for required electrical and mechanical characteristics before substitutions are made. Eaton is not responsible for misapplications of our products.

Overcurrent protection is application dependent. Consult the latest catalogs and application literature, or contact our Application Engineers toll free, 7:00 a.m. to 5:00 p.m. Central time, Monday-Friday at 855-287-7626 (855-BUSSMANN).

Customer satisfaction team

Available to answer questions regarding Bussmann series products and services. Available Monday-Friday, 7:00 a.m. — 6:00 p.m. Central time.

- Toll-free phone: 855-287-7626 (855-BUSSMANN)
- Toll-free fax: 800-544-2570
- Email: BussCustSat@Eaton.com

Emergency and after-hours orders

Next flight out or will call shipment for time-critical needs. Customers pay only standard product price, rush freight charges, and modest emergency service fee. Place these orders through the customer satisfaction team during regular business hours.

- After hours: 314-995-1342

My.Eaton.com

Provides real time product availability, net pricing, order status and shipment tracking. Log onto My.Eaton.com or call:

- 1-800-468-1705 Option #3 for log-in assistance.

Application engineering

Technical application assistance is available to all customers. Available Monday-Friday, 7:00 a.m. — 5:00 p.m. Central time.

- Toll-free phone: 855-287-7626 (855-BUSSMANN)
- Email: FuseTech@Eaton.com

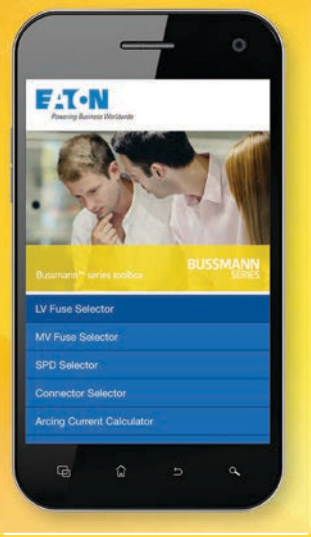

Bussmann series toolbox

All the tools you need, in the palm of your hand.

- > FC^2 Available Fault Current Calculator
- > Low Voltage Fuse Selector
- > Medium Voltage Fuse Selector
- > Surge Protective Device Selector
- > Connector Selector
- > Arcing Current Calculator
- > SCCR Protection Suite
- > OSCAR™ 2.1 Online Compliance
- > Selective Coordination Designer
- > RoHS Compliance Product Search
- > Distributor Locator

http://toolbox.bussmann.com

Eaton
1000 Eaton Boulevard
Cleveland, OH 44122
Eaton.com

Bussmann Division
114 Old State Road
Ellisville, MO 63021
United States
Eaton.com/bussmannseries

© 2018 Eaton
All Rights Reserved
Printed in USA
Publication No. 1007
October 2018

Eaton and Bussmann are valuable trademarks of Eaton in the U.S. and other countries. You are not permitted to use the Eaton trademarks without prior written consent of Eaton.

For Eaton's Bussmann series product information, call 1-855-287-7626 or visit: Eaton.com/bussmannseries

Follow us on social media to get the latest product and support information.

Powering Business Worldwide