THIS DRAWING IS UNPUBLISHED. RELEASED FOR PUBLICATION 20
© COPYRIGHT 20 BY -TE CONNECTIVITY ALL RIGHTS RESERVED.

LOC	DIST
ES	00

REVISIONS

P	LTR	DESCRIPTION	DATE	DWN	APVD
	A	FIRST RELEASED	08JAN15	F.W	SY.W
	A1	ECR-15-015313	19OCT15	L.D	SY.W
	B	ECR-16-001750	19JAN16	L.D	SY.W
	B1	ECR-17-012143	21AUG2017	V.W	I.Y

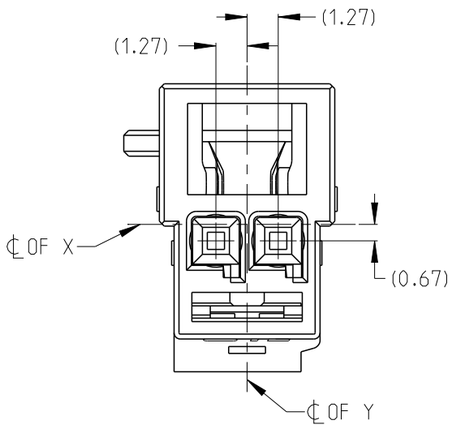

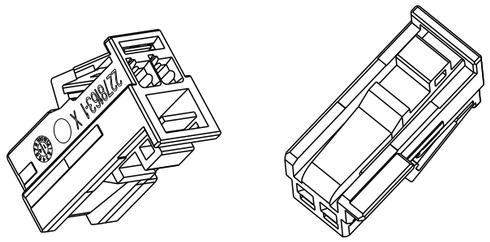

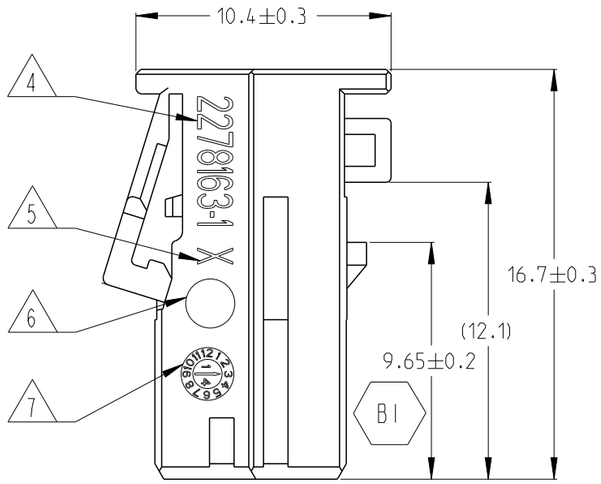

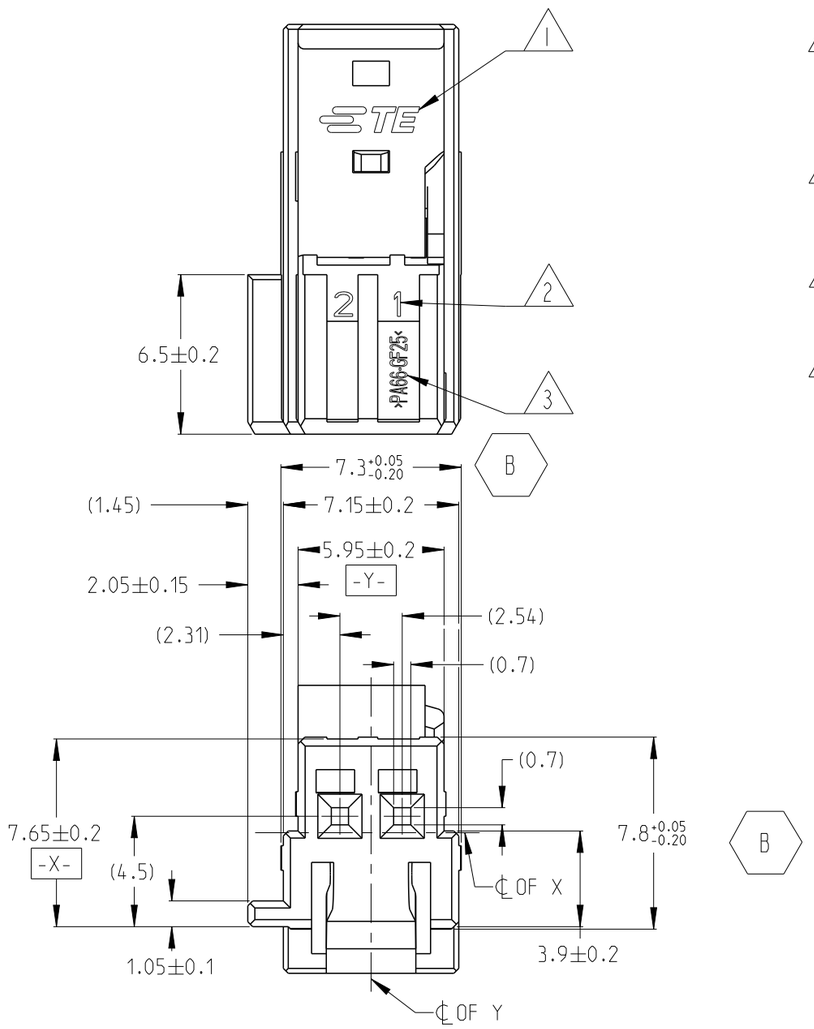

NOTES

1. TE LOGO
2. CAVITY IDENTIFICATION
3. MATERIAL IDENTIFICATION
4. TE PART NUMBER
5. PART REVISION
6. CAVITY MARK
7. PRODUCTION DATECODE
8. SUITABLE CONTACT SEE TE GROUP DRAWING 929454
9. SUITABLE FOR WIRE SIZE RANGE 0.2-0.75mm²
10. THE ONLY DIFFERENCE BETWEEN 2278163-1 AND 1-2278163-1 IS PACKAGING

PART NUMBER	DESCRIPTION	COLOR	PACKAGING
1-2278163-1	MQS SOCKET HOUSING, 2POSN	BLACK	CARTON
2278163-1	MQS SOCKET HOUSING, 2POSN	BLACK	TURNOVER BOX

THIS DRAWING IS A CONTROLLED DOCUMENT.

DIMENSIONS: mm

TOLERANCES UNLESS OTHERWISE SPECIFIED:
0 PLC ±
1 PLC ±
2 PLC ±
3 PLC ±
4 PLC ±
ANGLES ±

MATERIAL

FINISH

DWN F.WANG 08JAN2015
CHK A.DANG 12JAN2015
APVD SY.WANG 12JAN2015

PRODUCT SPEC

APPLICATION SPEC

WEIGHT

TE Connectivity

NAME MQS SOCKET HOUSING,2POS

SIZE	CAGE CODE	DRAWING NO	RESTRICTED TO
A3	-	C-2278163	

CUSTOMER DRAWING

SCALE 4:1 SHEET 1 OF 1 REV B1