THIS DRAWING IS UNPUBLISHED. RELEASED FOR PUBLICATION ,19 .
© COPYRIGHT 19 BY AMP INCORPORATED. ALL RIGHTS RESERVED.

LOC	DIST
AD	25

REVISIONS

P	LTR	DESCRIPTION	DATE	DWN	APVD
	0	DRAWN	–	–	–
	A	EC 0010-1254-95	9/26/95	LSB	CR
	B	EC 0010-1457-95	1/18/96	LSB	CR
	C	EC 0010-1469-95	4/1/96	LSB	CR
	D	EC 0504-0055-96	10/25/96	LSB	CR

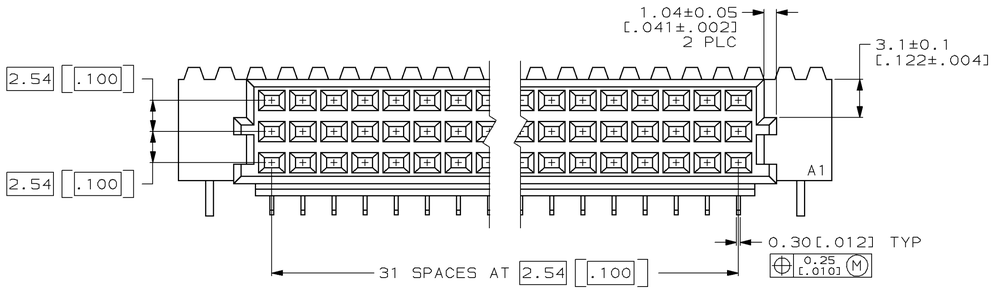

1. HOUSING MATERIAL: GLASS-FILLED POLYESTER. COLOR: GRAY.
2. CONTACT MATERIAL: PHOSPHOR BRONZE.
3. CONTACT FINISH: DIN 41612 CLASS 2 IN CONTACT AREA. TIN-LEAD PLATE ON TAILS.
4. RECOMMENDED HOLE SIZE FOR MANUAL APPLICATION OF CONNECTOR ONTO PC BOARD.
5. PART NUMBER, DATE CODE IDENTIFICATION, CSA LOGO HOT-STAMPED THIS APPROXIMATE AREA.
6. CONTACT POINT.
7. HOT-STAMPING ON THIS SIDE.
8. CONTACT FINISH: DIN 41612 CLASS 3 IN CONTACT AREA. TIN-LEAD PLATE ON TAILS.
9. RECOMMENDED PRINTED CIRCUIT BOARD THICKNESS IS 1.57[.062].

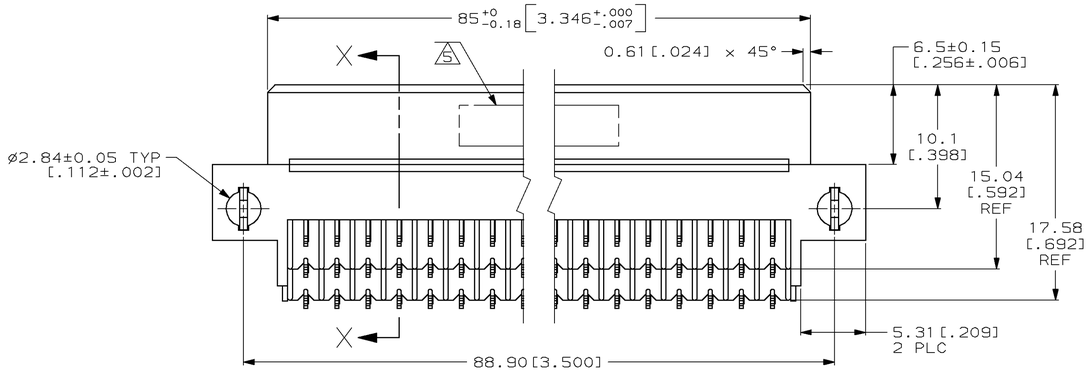

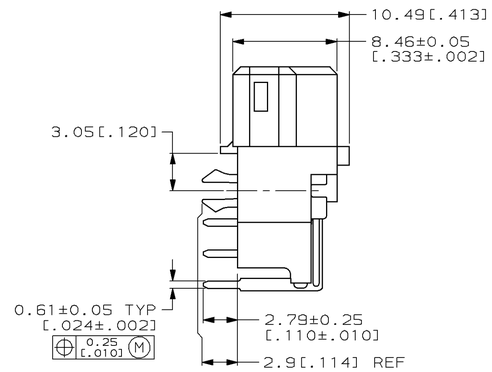

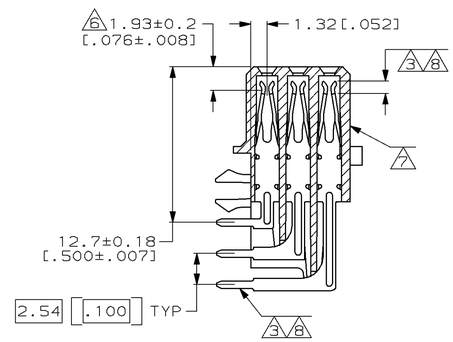

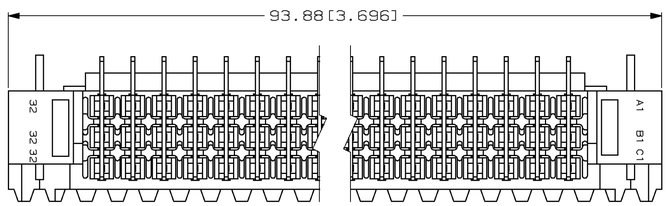

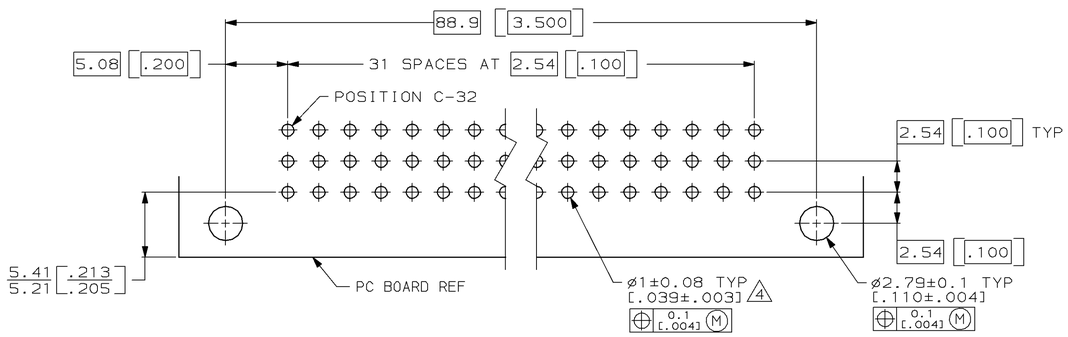

PC BOARD LAYOUT 9

	8	1-32	X	X	X	96	148220-9
	3	1-32	X	X	X	96	148220-5
SUPERSEDED BY 148220-5	3	1-32	X	X	X	96	148220-4
	NOTES	POSITIONS LOADED	ROWS LOADED C	B	A	NO. OF LOADED POSITIONS	PART NUMBER

THIS DRAWING IS A CONTROLLED DOCUMENT FOR AMP INCORPORATED. IT IS SUBJECT TO CHANGE AND THE CONTROLLING ENGINEERING ORGANIZATION SHOULD BE CONTACTED FOR THE LATEST REVISION.

DIMENSIONS: mm

TOLERANCES UNLESS OTHERWISE SPECIFIED:
0 PLC ±–
1 PLC ±–
2 PLC ±0.13[.005]
3 PLC ±–
4 PLC ±–
ANGLES ±–

MATERIAL – HOUSING: 1 POST: 2
FINISH – POST: 3 8

DWN L. BRINER 9/15/95
CHK C. RICHARD 9/15/95
APVD C. RICHARD 9/15/95
PRODUCT SPEC –
APPLICATION SPEC –
WEIGHT –
CUSTOMER DRAWING

AMP
AMP Incorporated
Harrisburg, PA 17105-3608

NAME
RECEPTACLE ASSEMBLY, EUROCARD, TYPE R WITH BOARD-LOCKS

SIZE A1 | CAGE CODE 00779 | DRAWING NO C-148220
SCALE 4:1 | SHEET 1 OF 1 | REV D

AMP 480S REV 09MAY94