THIS DRAWING IS UNPUBLISHED. RELEASED FOR PUBLICATION - ,- .
© COPYRIGHT - By - ALL RIGHTS RESERVED.

LOC	DIST
AF	58

REVISIONS

P	LTR	DESCRIPTION	DATE	DWN	APVD
	V4	REVISED PER ECR-17-004131	20JUN17	ST	TD

1. FOR USE IN PRINTED CIRCUIT BOARD, 3/64-1/8 THICK.
2. WIRE RANGE: 18-28 AWG (SOLID) OR (STRANDED) WIRE. MAX OUTSIDE DIA .086.
3. FURNISHED AS LOOSE PIECE OR STRIP MOUNTED BY SMALL END OF BARREL.
4. TERMINAL SHALL ACCOMMODATE ONE OR TWO WIRES OF THE SAME TYPE AND WITHIN PLUS OR MINUS ONE WIRE GAGE SIZE. EXAMPLE:
   24 AWG MAY BE MIXED WITH EITHER 26 OR 22 AWG.
5. RECOGNIZED UNDER COMPONENT RECOGNITION PROGRAM OF UNDERWRITERS LABORATORIES INC., FILE NO. E-28476.
6. FOR 18-22 AWG WIRE USE INSERTION TOOL, PART NO.

8. WHEN USING TEFLON INSULATED WIRES USE 552699-1, -2 OR -3 ONLY.

9. WHEN USING 28 AWG SOLID, TWO WIRES PER TERMINAL, USE 552699-4, -5, -6, -7 OR -8 ONLY.

10. PRE PRODUCTION FASR REQUIRED

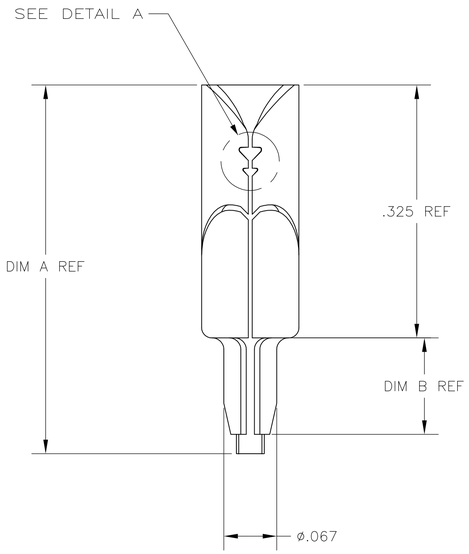

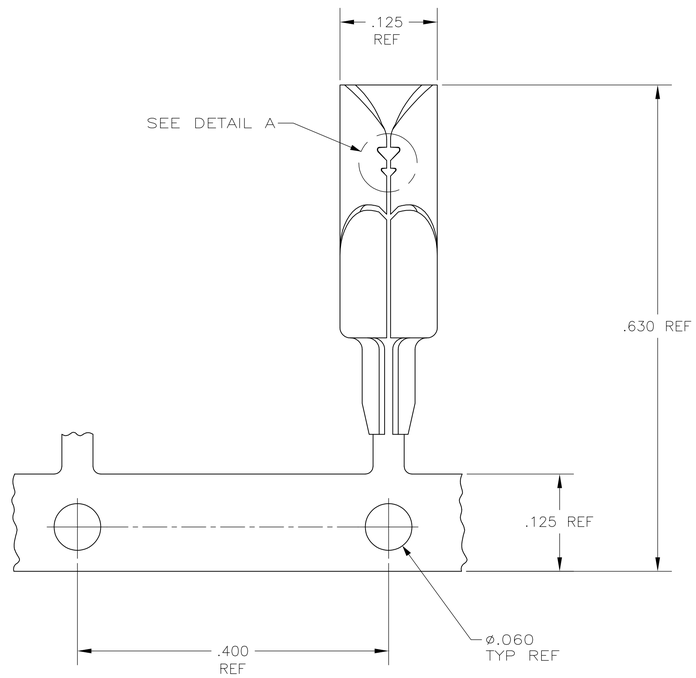

LOOSE PIECE

-1,-3,-4,-6, & -8 ONLY

STRIP MOUNTED

-2, -5 & -7 ONLY

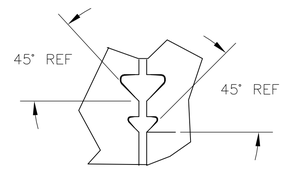

DETAIL A
FOR -1,-2,-3 ONLY

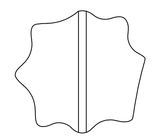

DETAIL A
FOR -4, -5, -6, ONLY

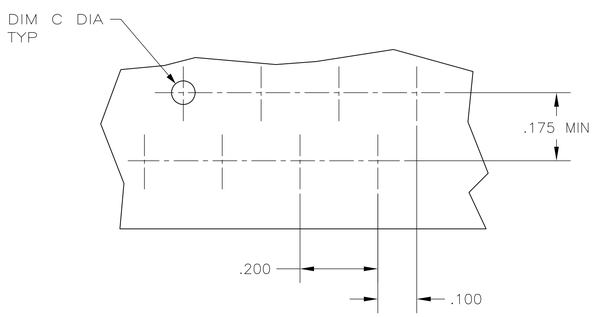

SUGGESTED PRINTED CIRCUIT BOARD MOUNTING DIMENSIONS

OBSOLETE

TERMINAL INSERTION TOOL (REF)	PUNCHED HOLE DIM. C	DRILLED HOLE DIM. C	DIM. B	DIM. A	PC BOARD THICKNESS	DESCRIPTION	PART NO.
~~1-453973-4~~	~~.060-.064~~	~~.061-.065~~	~~.118~~	~~.458~~	~~.062-.094~~	~~STRIP MOUNTED, REVERSE REELED 10~~	~~1-552699-0~~
~~2-453973-1~~				~~.483~~	~~.094-.125~~		
~~230549-1~~				~~.483~~	~~.062-.125~~	~~SUPERSEDED BY -4~~	~~552699-6~~
~~1-453973-4~~				~~.458~~	~~.062-.094~~	~~SAME AS -2 EXCEPT AS SHOWN IN DETAIL A 9~~	~~552699-5~~
~~2-453973-1~~				~~.483~~	~~.094-.125~~		
~~230549-1~~				~~.458~~	~~.062-.094~~	~~SAME AS -1 EXCEPT AS SHOWN IN DETAIL A 9~~	~~552699-4~~
~~230549-1~~				~~.458~~	~~.062-.094~~	~~SUPERSEDED BY -1~~	~~552699-3~~
~~1-453973-4~~				~~.458~~	~~.062-.094~~	~~AS SHOWN, STRIP MOUNTED 8~~	~~552699-2~~
~~2-453973-1~~				~~.483~~	~~.094-.125~~		
~~230549-1~~				~~.458~~	~~.062-.094~~	~~AS SHOWN, LOOSE PIECE 8~~	~~552699-1~~

THIS DRAWING IS A CONTROLLED DOCUMENT.

DIMENSIONS: INCHES

TOLERANCES UNLESS OTHERWISE SPECIFIED:
0 PLC ± -
1 PLC ± -
2 PLC ± -
3 PLC ± -
4 PLC ± -
ANGLES ± -

MATERIAL: PHOS BRONZE
FINISH: PRE-TINNED

DWN jr ruth 02MAY2011
CHK PETE DESANTIS 02MAY11
APVD PETE DESANTIS 02MAY11
PRODUCT SPEC —
APPLICATION SPEC —
WEIGHT

TE Connectivity

NAME: TERMINAL, AMP BARREL, .125 DIA
—
—

SIZE	CAGE CODE	DRAWING NO	RESTRICTED TO
A1	00779	C-552699	—

CUSTOMER DRAWING

SCALE	SHEET	REV
1:1	1 OF 1	V4

4805 (3/11)