PRODUCT NO.	MATERIAL
68106-XXXLF	PLAIN NORYL, COLOR: BLACK UL94V-1
68106-XXXHLF	Zytel: FR-50, BLACK UL94V-0

P/N	No.of POS	A	B	C	D
68106-003LF,-003HLF	8	5.08/.200	10.27/.404	12.27/.483	13.84/.545
68106-002LF,-002HLF	6	2.54/.100	7.73/.304	9.73/.383	11.30/.445
68106-001LF,-001HLF	4	0/.0	5.19/.204	7.19/.287	8.76/.345

NOTE

1. PUT DD MARK IN THIS PLACE WITH 0.02/.008 HEIGHT
2. PUT CAV NO. 1.2.3.4. IN THIS PLACE WITH 0.02/.008 HEIGHT
3. THIS PRODUCT MEETS EUROPEAN UNION DIRECTIVESAND OTHER COUNTRY REGURATIONS AS DESCRIBVED IN GS-22-008.
4. THIS PRODUCT IS NOT INTENDED TO BE EXPOSED TO A MANUFACTURING SOLDER PROCESS.

注 記

1. この位置にDDマークを彫刻、浮き出し高さ0.02MAX.
2. この位置にCAV No, 1.2.3.4を彫刻 浮き出し高さ0.02 MAX.
3. 本製品は、GS-22-008に記載された ヨーロッパ連合指令と他国の規制に適合しています。
4. 本製品は、はんだ付け工程には使用できません。

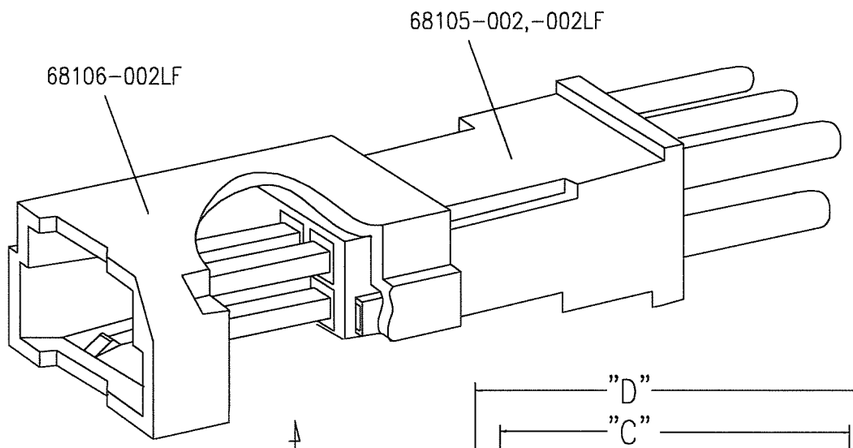

FIG.1

PUT CAV.NO.1.2.3.4 IN THIS SURFACE

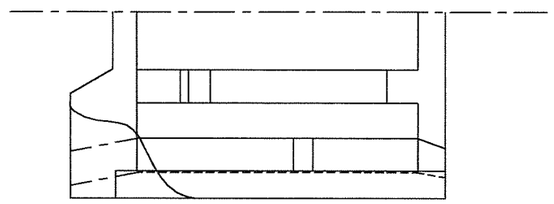

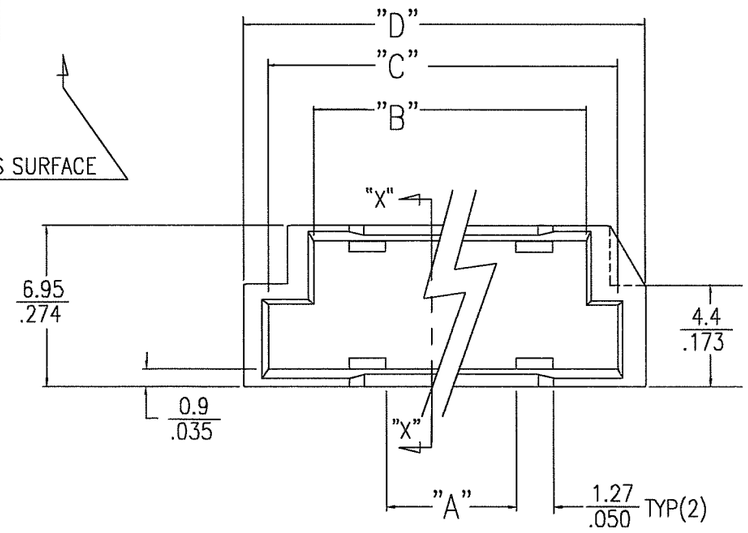

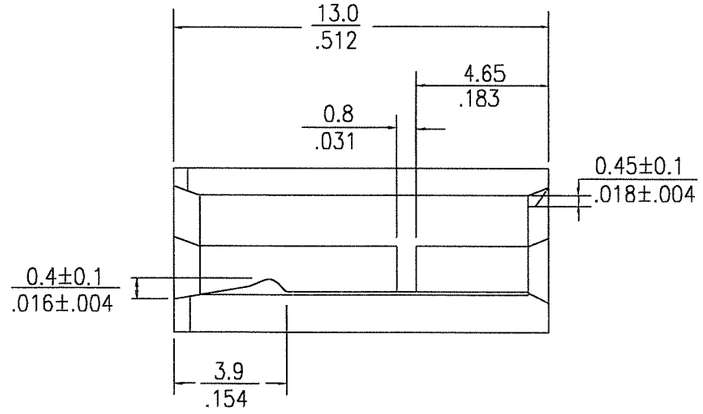

SECT "X"-"X"

mat'l. code					surface ISO 1302	tolerance ISO 406 ISO 1101		projection	product family	CODE
---									5NGF - PV HOUSINGS	JP
ltr	description	ecn no	dr	date	tolerances unless otherwise specified				title	
A	RELEASED		NY	11/10/'83	angles	linear	0.X ±0.25	mm/INCH	POLARIZED M/L HSG SHROUD DOUBLE ROW	
B	REVISED	J8110	NY	12/5/'84			0.XX ±0.25			
C	REVISED	J8481	NY	8/5/'87	0°±2°		0.XXX ±0.25	scale ###		
D	ADD NEW P/N	J03-0441	YK	10/29/'03	dr	R.SHOUJI	9/5/'06		dwg no 68106	sheet 1 of 1 size A3
E	REVISED	J05-0575	R.S	9/7/'05	engr	R.SHOUJI	10/2/'06			
F	REVISED	J06-0370	R.S	10/2/'06	chr					
					appd				type PRODUCT CUSTOMER Drawing	
sheet index	revision	F								Rev. F
	sheet	1								

FCI CONFIDENTIAL

This document is the property of and embodies CONFIDENTIAL and PROPRIETARY information of FCI. No part of the information shown on this document may be used in any way or disclosed to others without the written consent of FCI. Copyright FCI.

FCIconnect.com

form: A2

PDM: Rev:F STATUS Released Printed: Jul 12, 2011