THIS DRAWING IS UNPUBLISHED. RELEASED FOR PUBLICATION -,- .
© COPYRIGHT - By - ALL RIGHTS RESERVED.

LOC	DIST
AF	50

REVISIONS

P	LTR	DESCRIPTION	DATE	DWN	APVD
	E	REVISED PER ECR-12-013459	29NOV2012	KH	PD

1 CONTINUOUS STRIP ON REELS.

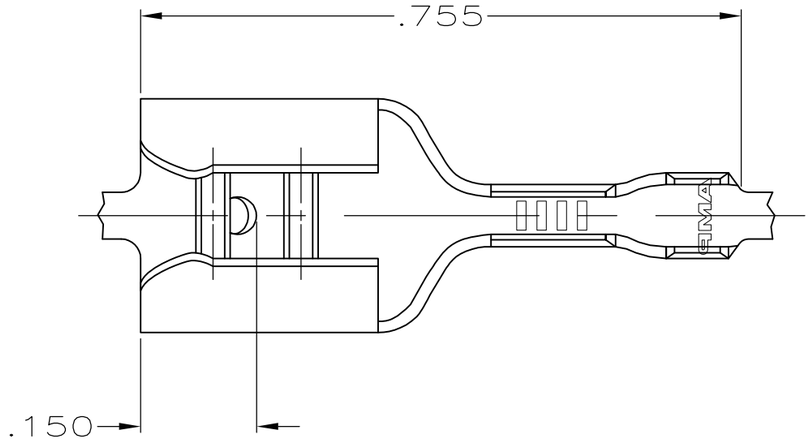

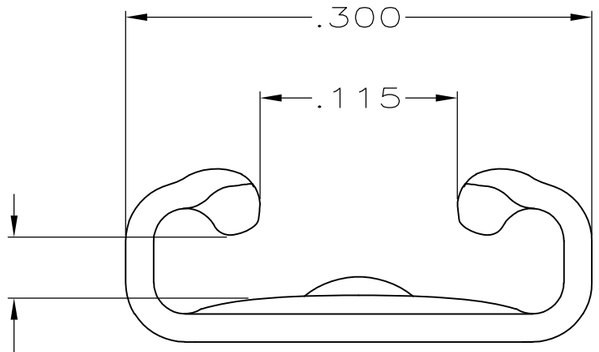

FITS .250 SERIES
FASTON TABS

VIEW Y—Y
SCALE 10:1

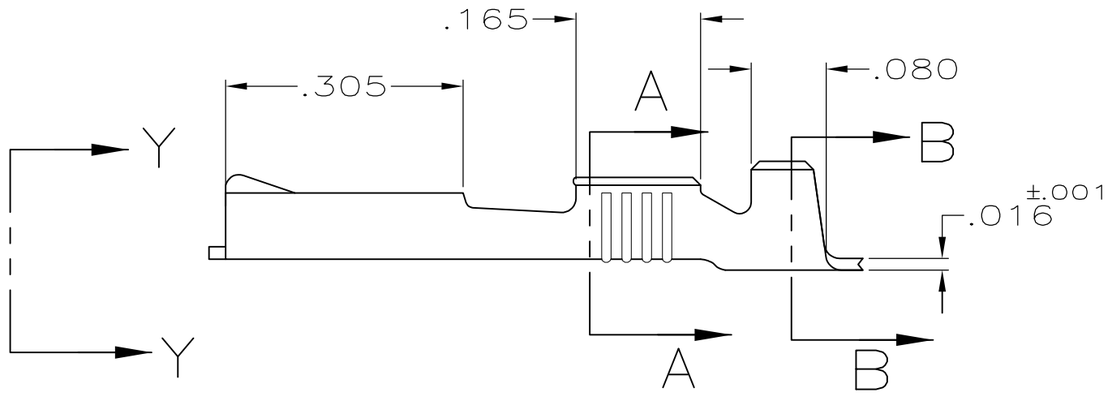

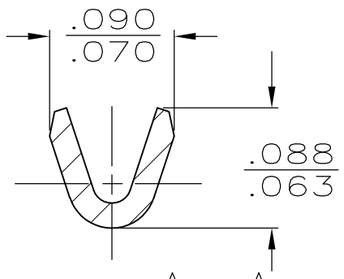

SECTION A—A
SCALE 10:1

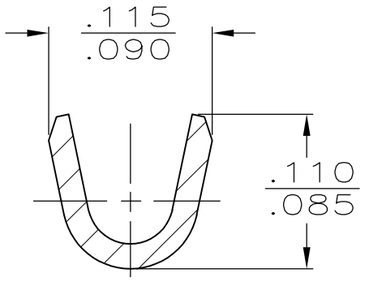

SECTION B—B
SCALE 10:1

FINISH	INSULATION RANGE	WIRE SIZE	MATING TAB THK ±.001	PART NO
TIN	.040-.060 DIA	26-22 AWG	.032	61202-2
—				61202-1

THIS DRAWING IS A CONTROLLED DOCUMENT.

DIMENSIONS: INCHES

TOLERANCES UNLESS OTHERWISE SPECIFIED:

0 PLC	± –
1 PLC	± –
2 PLC	± –
3 PLC	± .015
4 PLC	± –
ANGLES	± –

MATERIAL: BRASS

FINISH: SEE TABLE

DWN	JR RUTH	4/18/91
CHK	MS FEHER	4/18/91
APVD	C MEYERS	4/18/91
PRODUCT SPEC	—	
APPLICATION SPEC	—	
WEIGHT	—	

TE Connectivity

NAME: RECEPTACLE, FASTON, .250 SERIES

SIZE	CAGE CODE	DRAWING NO	RESTRICTED TO
A3	00779	C-61202	—

CUSTOMER DRAWING

SCALE	SHEET	REV
5:1	1 OF 1	E