THIS DRAWING IS UNPUBLISHED. RELEASED FOR PUBLICATION -,- .
© COPYRIGHT - BY TYCO ELECTRONICS CORPORATION. ALL RIGHTS RESERVED.

LOC	DIST
CE	17

REVISIONS

P	LTR	DESCRIPTION	DATE	DWN	APVD
	A	RELEASED	27OCT05	JWD	JD

1. MAXIMUM CONNECTOR INSERTION LOSS IS 0.5dB PLUS CABLE ATTENUATION OF 1.5dB/km AT 1300nm (SEE TABLE)
2. PRODUCT AND PROCESSING MUST MEET REQUIREMENTS OF TYCO ELECTRONICS STANDARD 230-702

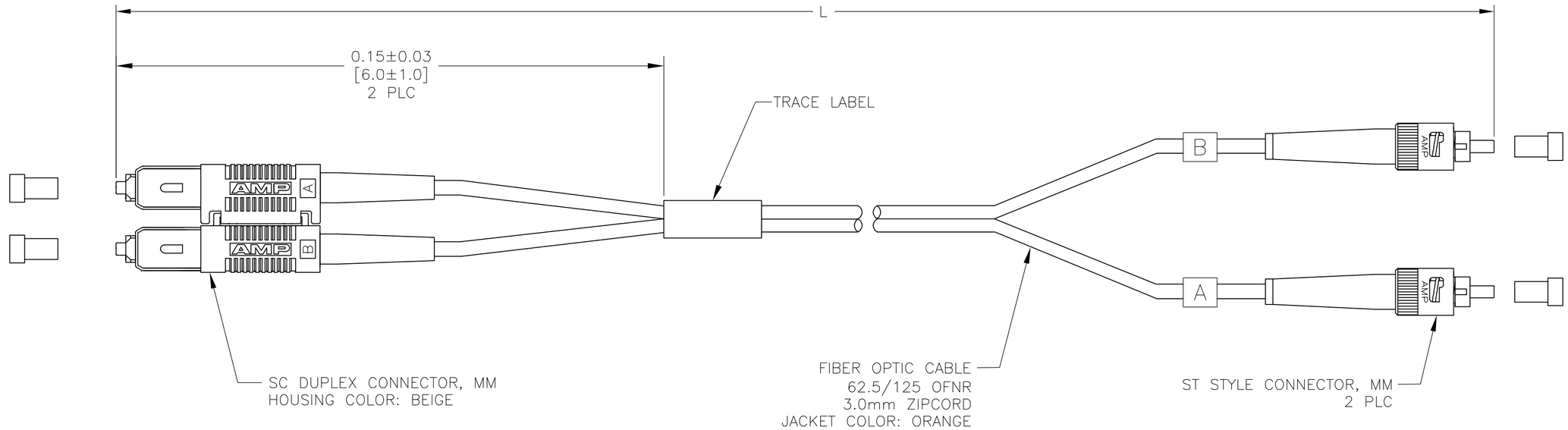

MAX IL (dB) 1	L METERS [INCHES]	PART NUMBER
0.55	30.00±0.30 [1181.1±11.8]	3-5504958-0
0.54	25.00±0.30 [984.2±11.8]	2-5504958-5
0.64	91.44±0.91 [3600.0±36.0]	1-5504958-6
0.51	4.00±0.08 [157.5±3.2]	1-5504958-5
0.50	0.305+0.051/-0.0 [12.0+2.0/-0.0]	1-5504958-4
0.50	2.44±0.05 [96.0±2.0]	1-5504958-3
0.52	13.00±0.15 [511.8±5.9]	1-5504958-2
0.52	11.00±0.15 [433.1±5.9]	1-5504958-1
0.51	8.00±0.15 [315.0±5.9]	1-5504958-0
0.51	7.00±0.08 [275.6±3.2]	5504958-9
0.51	6.00±0.08 [236.2±3.0]	5504958-8
0.53	20.00±0.30 [787.4±11.8]	5504958-7
0.52	15.00±0.15 [590.5±5.9]	5504958-6
0.52	10.00±0.15 [393.7±5.9]	5504958-5
0.51	5.00±0.08 [196.8±3.2]	5504958-4
0.50	3.00±0.05 [118.1±2.0]	5504958-3
0.50	2.00±0.05 [78.7±2.0]	5504958-2
0.50	1.00±0.05 [39.4±2.0]	5504958-1

5504958

THIS DRAWING IS A CONTROLLED DOCUMENT.

DIMENSIONS: METERS [INCHES]

TOLERANCES UNLESS OTHERWISE SPECIFIED:
0 PLC ± -
1 PLC ± -
2 PLC ± -
3 PLC ± -
4 PLC ± -
ANGLES ± -

MATERIAL -
FINISH -

DWN J. W. DAVIS 27OCT05
CHK J.DUNCAN 27OCT05
APVD F. McCORKEL 27OCT05
PRODUCT SPEC —
APPLICATION SPEC —
WEIGHT —

tyco Electronics
Tyco Electronics Corporation
Harrisburg, PA 17105-3608

NAME
CABLE ASSEMBLY, FIBER OPTIC, 62.5/125um, 3.0mm OFNR ZIPCORD, SC DUPLEX TO DUAL ST, RoHS

SIZE	CAGE CODE	DRAWING NO	RESTRICTED TO
A2	00779	C-5504958	—

CUSTOMER DRAWING | SCALE NTS | SHEET 1 OF 1 | REV A