THIS DRAWING IS UNPUBLISHED. RELEASED FOR PUBLICATION -,- .
© COPYRIGHT - BY TYCO ELECTRONICS CORPORATION. ALL RIGHTS RESERVED.

LOC	DIST
AD	00

REVISIONS

P	LTR	DESCRIPTION	DATE	DWN	APVD
	B	REVISED PER ECO-09-021962	30SEP09	HMR	MW
	B1	REVISED PER ECO-09-024927	07NOV09	KK	AEG

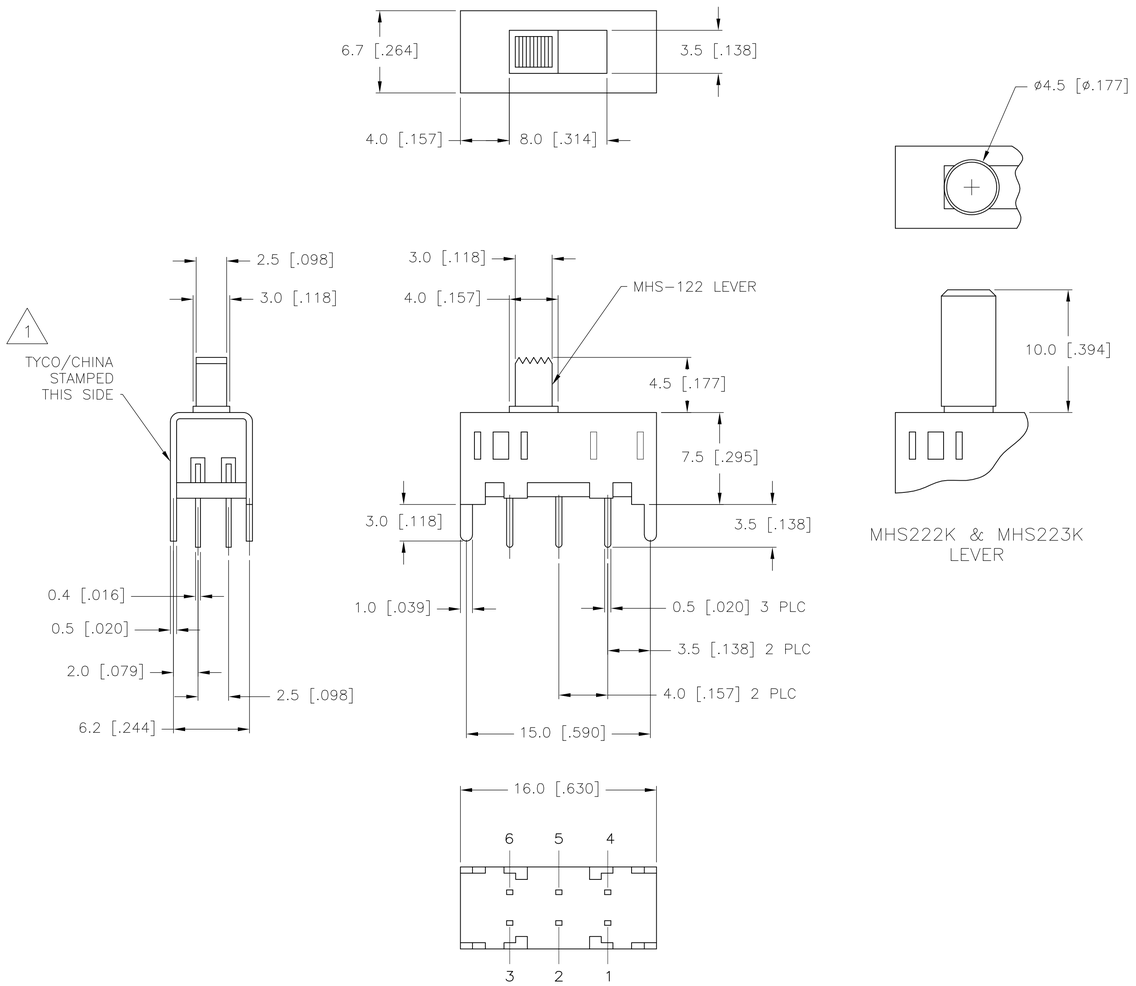

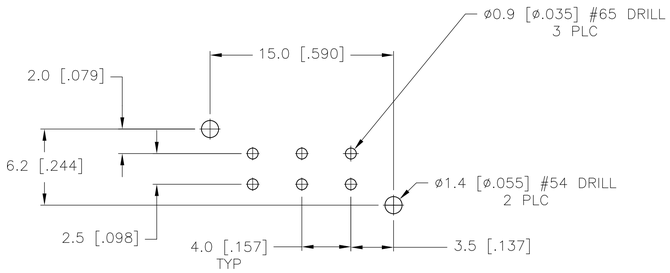

RECOMMENDED BOARD LAYOUT
PC LAYOUT TOLERANCE: ±.002

MHS222 & MHS223 SERIES SWITCH

SPECIFICATIONS
MAKE-BEFORE-BREAK

MATERIALS:
ACTUATOR- THERMOPLASTIC, UL94HB
TERMINAL BOARD- PHENOLIC LAMINATED SHEET, UL94HB, NATURAL
FRAME- STEEL, NICKEL PLATE
TERMINAL/FIXED CONTACT- COPPER ALLOY, GOLD OR SILVER OVER NICKEL PLATE
MOVING CONTACT- COPPER ALLOY, GOLD OR SILVER OVER NICKLE PLATE
DETENT BALL- STEEL
COIL SPRING- GALVANIZED SPRING WIRE
LEVER,(K SERIES ONLY)- ALUMINUM
SEAL- EPOXY

ELECTRICAL:
CONTACT RATING- .4VA@20VDC OR PEAK AC (GOLD); 300mA@125V AC (SILVER)
INITIAL CONTACT RESISTANCE- 30 milliohm max.
FINAL CONTACT RESISTANCE- 100 milliohm max. (AFTER TEST)
INSULTAION RESISTANCE- 1,000 Megohms min.
DIELECTRIC STRENGTH- 500V RMS@SEA LEVEL
LIFE EXPECTANCY- 15,000 CYCLES MIN.

MECHANICAL:
ACTUATION FORCE- 600+/-300 GRAMS
TRAVEL- SEE P/N TABLE

ENVIRONMENTAL:
OPERATING TEMPERATURE- -20 TO +85 DEGREES C
STORAGE TEMPERATURE- -40 TO +100 DEGREES C
RESISTANCE TO SOLDER HEAT PER 109-202, CONDITION B
SOLDERABILITY PER EIA-364-52, CLASS 2, CATEGORY 1, 95% MIN COVERAGE

NOTES:

1. MARK PER 202-37 SPECIFICATION, tyco/CHINA MINIMUM REQUIREMENT

2. ALL MATERIALS AND FINISHES SHALL COMPLY WITH EU DIRECTIVE 2002/95/EC OF 27JAN2003 (ROHS)

3. ANTI SOLDER WICK SEAL AT TERMINAL TO BOARD INTERFACE

4. ALL PERFORMANCE TESTING WAS DONE IN ACCORDANCE TO TYCO SPECIFICATION 102-2469

5. OBSOLETE PARTS: OBSOLETE CIS STREAMLINING PER D.RENAUD/D.SINISI

TYCO PART NO.	T&B PART NO.	TYPE	TRAVEL	PLATING	1 2 3 / 4 5 6	1 234 / 5 678	1 2 3 / 4 5 6	1 234 / 5 678	1 2 3 / 4 5 6	1 234 / 5 678
OBSOLETE 5 ~~1-1825289-1~~	MHS233KG04	DP3T	2.00	GOLD	-	6-5 / 2-1	-	7-6 / 3-2	-	8-6 / 4-2
1-1825289-0	MHS233K04	DP3T	2.00	SILVER	-	6-5 / 2-1	-	7-6 / 3-2	-	8-6 / 4-2
1825289-9	MHS233G04	DP3T	2.00	GOLD	-	6-5 / 2-1	-	7-6 / 3-2	-	8-6 / 4-2
1825289-8	MHS23304	DP3T	2.00	SILVER	-	6-5 / 2-1	-	7-6 / 3-2	-	8-6 / 4-2
-	MHS223KG04	DPDT	2.00	GOLD	5-4 / 2-1	-	OFF	-	6-5 / 3-2	-
1825289-7	MHS223K04	DPDT	2.00	SILVER	5-4 / 2-1	-	OFF	-	6-5 / 3-2	-
1825289-6	MHS223G04	DPDT	2.00	GOLD	5-4 / 2-1	-	OFF	-	6-5 / 3-2	-
1825289-5	MHS22304	DPDT	2.00	SILVER	5-4 / 2-1	-	OFF	-	6-5 / 3-2	-
OBSOLETE 5 ~~1825289-4~~	MHS222KG04	DPDT	4.00	GOLD	5-4 / 2-1	-	NONE	-	6-5 / 3-2	-
~~1825289-3~~	MHS222K04	DPDT	4.00	SILVER	5-4 / 2-1	-	NONE	-	6-5 / 3-2	-
1825289-2	MHS222G04	DPDT	4.00	GOLD	5-4 / 2-1	-	NONE	-	6-5 / 3-2	-
1825289-1	MHS22204	DPDT	4.00	SILVER	5-4 / 2-1	-	NONE	-	6-5 / 3-2	-

TERMINALS CONNECTED WHEN SLIDE IS IN POSITION SHOWN.

THIS DRAWING IS A CONTROLLED DOCUMENT.

DIMENSIONS: mm

TOLERANCES UNLESS OTHERWISE SPECIFIED:
0 PLC ± -
1 PLC ± 0.3 [.012]
2 PLC ± -
3 PLC ± -
4 PLC ± -
ANGLES ± 1°

MATERIAL -
FINISH -

DWN R BROWN 21DEC05
CHK M SARVER 21DEC05
APVD M SARVER 21DEC05
PRODUCT SPEC -
APPLICATION SPEC -
WEIGHT -

Tyco Electronics
Tyco Electronics Corporation
Harrisburg, Pa 17105-3608

NAME: SLIDE SWITCH, MHS SERIES, DOUBLE POLE, VERTICAL

SIZE	CAGE CODE	DRAWING NO	RESTRICTED TO
A1	00779	C-1825289	-

CUSTOMER DRAWING | SCALE 4:1 | SHEET 1 OF 2 | REV B1

THIS DRAWING IS UNPUBLISHED. RELEASED FOR PUBLICATION - ,- .
© COPYRIGHT - BY TYCO ELECTRONICS CORPORATION. ALL RIGHTS RESERVED.

LOC	DIST
AD	00

REVISIONS

P	LTR	DESCRIPTION	DATE	DWN	APVD
	–	SEE SHEET 1	–	–	–

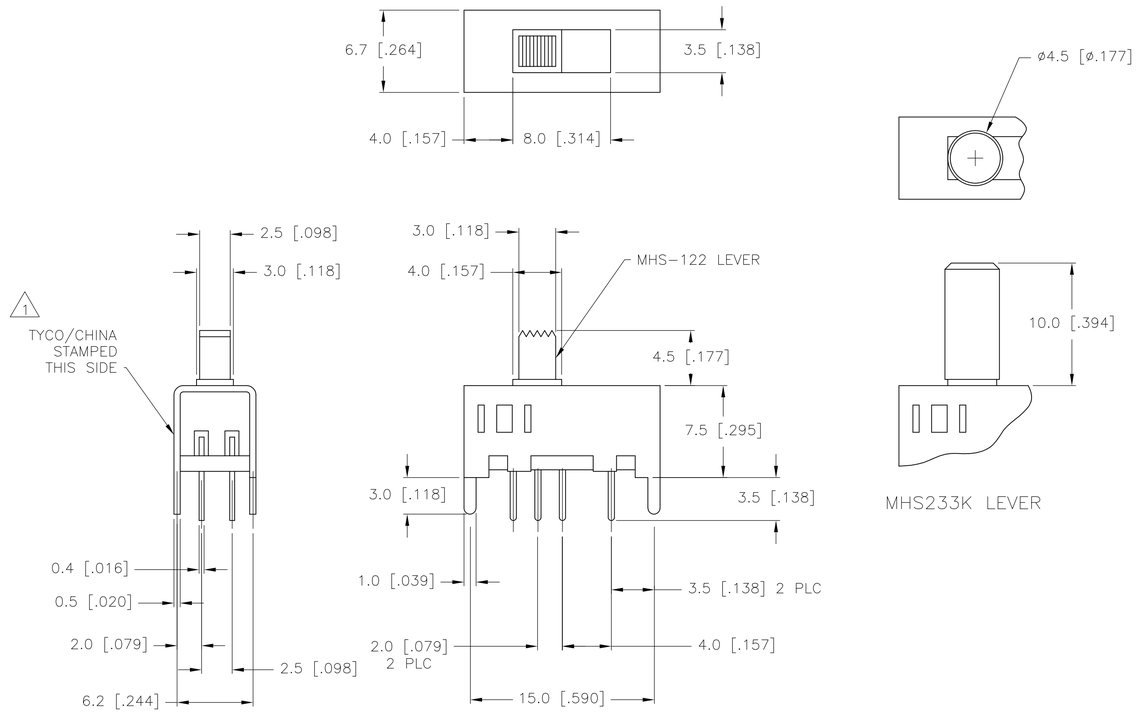

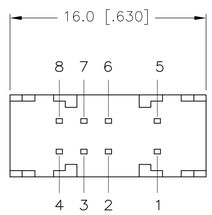

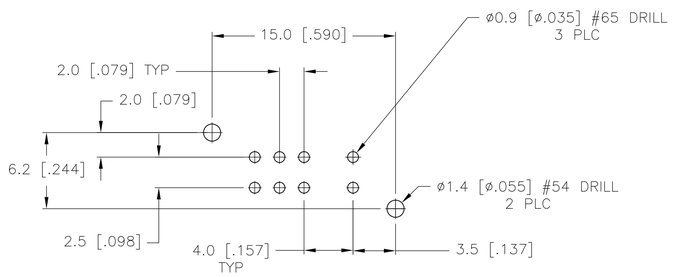

RECOMMENDED BOARD LAYOUT
PC LAYOUT TOLERANCE: ±.002

MHS233 SERIES SWITCH

SPECIFICATIONS
MAKE-BEFORE-BREAK

MATERIALS:
ACTUATOR- THERMOPLASTIC, UL94HB
TERMINAL BOARD- PHENOLIC LAMINATED SHEET, UL94HB, NATURAL
FRAME- STEEL, NICKEL PLATE
TERMINAL/FIXED CONTACT- COPPER ALLOY, GOLD OR SILVER OVER NICKEL PLATE
MOVING CONTACT- COPPER ALLOY, GOLD OR SILVER OVER NICKLE PLATE
DETENT BALL- STEEL
COIL SPRING- GALVANIZED SPRING WIRE
LEVER,(K SERIES ONLY)- ALUMINUM
SEAL- EPOXY

ELECTRICAL:
CONTACT RATING- .4VA@20VDC OR PEAK AC (GOLD); 300mA@125V AC (SILVER)
INITIAL CONTACT RESISTANCE- 30 milliohm max.
FINAL CONTACT RESISTANCE- 100 milliohm max. (AFTER TEST)
INSULTAION RESISTANCE- 1,000 Megohms min.
DIELECTRIC STRENGTH- 500V RMS@SEA LEVEL
LIFE EXPECTANCY- 15,000 CYCLES MIN.

MECHANICAL:
ACTUATION FORCE- 600+/-300 GRAMS
TRAVEL- SEE P/N TABLE

ENVIRONMENTAL:
OPERATING TEMPERATURE- -20 TO +85 DEGREES C
STORAGE TEMPERATURE- -40 TO +100 DEGREES C
RESISTANCE TO SOLDER HEAT PER 109-202, CONDITION B
SOLDERABILITY PER EIA-364-52, CLASS 2, CATEGORY 1, 95% MIN COVERAGE

NOTES:

1. MARK PER 202-37 SPECIFICATION, tyco/CHINA MINIMUM REQUIREMENT

2. ALL MATERIALS AND FINISHES SHALL COMPLY WITH EU DIRECTIVE 2002/95/EC OF 27JAN2003 (ROHS)

3. ANTI SOLDER WICK SEAL AT TERMINAL TO BOARD INTERFACE

4. ALL PERFORMANCE TESTING WAS DONE IN ACCORDANCE TO TYCO SPECIFICATION 102-2469

THIS DRAWING IS A CONTROLLED DOCUMENT.

DIMENSIONS: mm

TOLERANCES UNLESS OTHERWISE SPECIFIED:
0 PLC ± –
1 PLC ± 0.3 [.012]
2 PLC ± –
3 PLC ± –
4 PLC ± –
ANGLES ± 1°

MATERIAL –
FINISH –

DWN R BROWN 21DEC05
CHK M SARVER 21DEC05
APVD M SARVER 21DEC05
PRODUCT SPEC –
APPLICATION SPEC –
WEIGHT –
CUSTOMER DRAWING

Tyco Electronics
Tyco Electronics Corporation
Harrisburg, Pa 17105-3608

NAME: SLIDE SWITCH, MHS SERIES, DOUBLE POLE, VERTICAL

SIZE	CAGE CODE	DRAWING NO	RESTRICTED TO
A1	00779	C-1825289	–

SCALE 4:1 SHEET 2 OF 2 REV B1