THIS DRAWING IS UNPUBLISHED. RELEASED FOR PUBLICATION -,- .
© COPYRIGHT - By - ALL RIGHTS RESERVED.

LOC	DIST
AF	50

REVISIONS

P	LTR	DESCRIPTION	DATE	DWN	APVD
	B	REVISED PER ECR-12-013518	19DEC12	KH	PD

1. CONTINUOUS STRIP ON REELS
2. MATING TAB THK TO BE 0.635±0.025 [.025±.001]
3. WIRE SIZE IS [#22-#18] AWG.
4. INSULATION RANGE IS 1.52-2.54 [.060-.100] DIA.

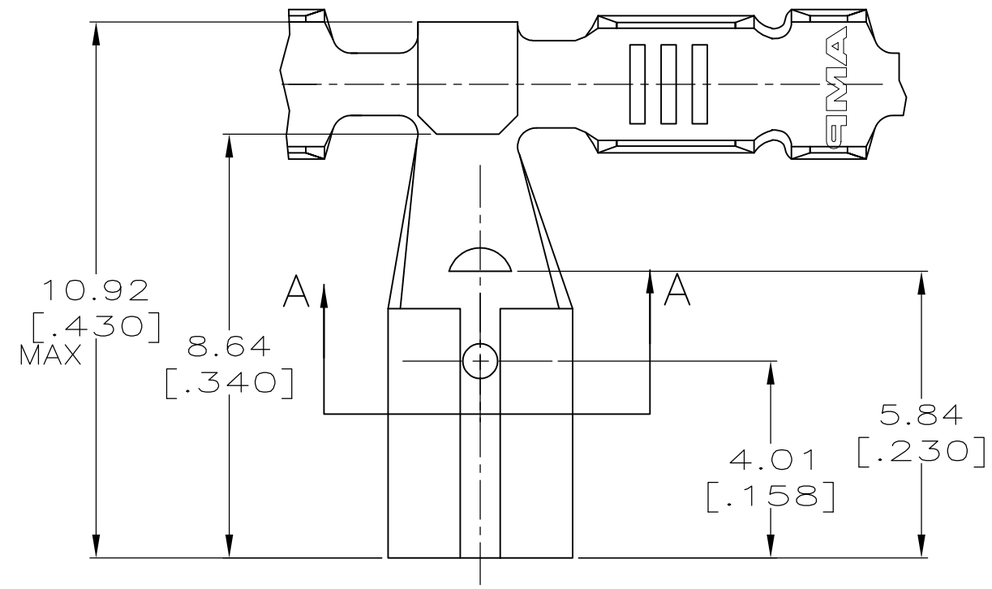

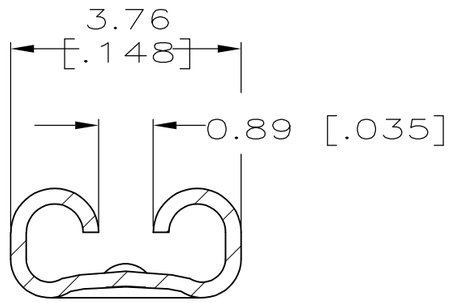

SECTION A-A
SCALE 10:1

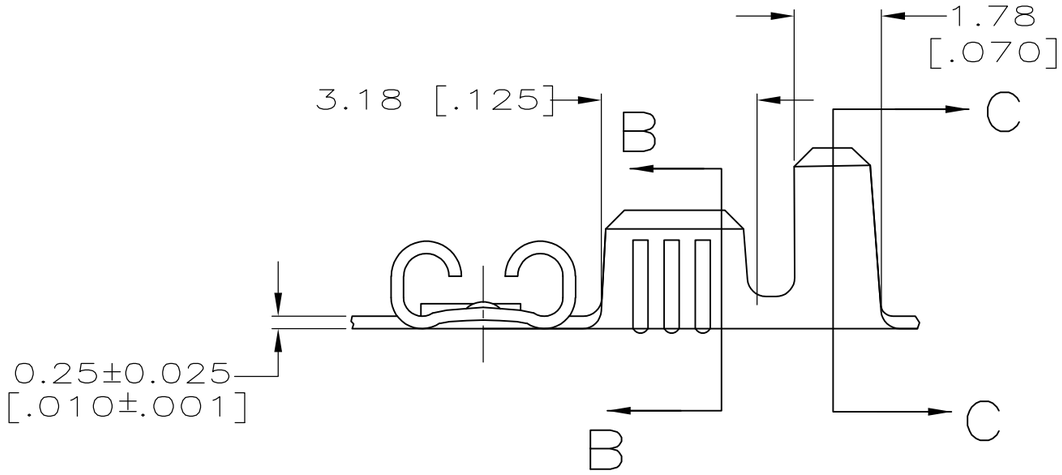

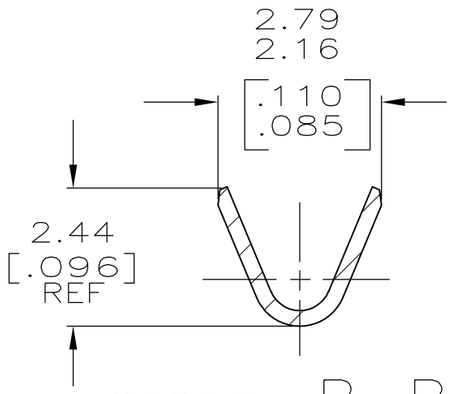

SECTION B-B
SCALE 10:1

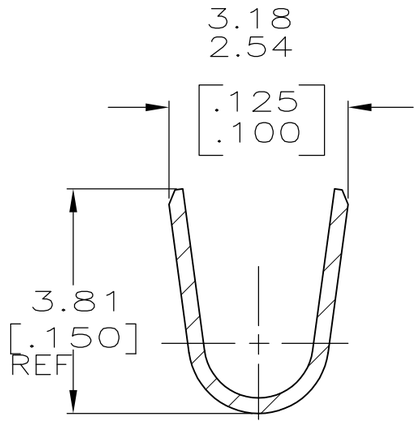

SECTION C-C
SCALE 10:1

1217138-1

PART NO.

THIS DRAWING IS A CONTROLLED DOCUMENT.

DIMENSIONS: mm [INCHES]

TOLERANCES UNLESS OTHERWISE SPECIFIED:

0 PLC	± -
1 PLC	± -
2 PLC	± -
3 PLC	± 0.25 [.010]
4 PLC	± -
ANGLES	± -

MATERIAL: BRASS

FINISH: PRE-TIN

DWN	JR RUTH	3FEB99
CHK	MS FEHER	3FEB99
APVD	S HEADER	3FEB99
PRODUCT SPEC	—	
APPLICATION SPEC	—	
WEIGHT	—	

TE Connectivity

NAME: RECEPTACLE, FASTON, FLAG, 2.79 [.110] SERIES
—

SIZE	CAGE CODE	DRAWING NO	RESTRICTED TO
A3	00779	C-1217138	—

CUSTOMER DRAWING

SCALE	SHEET	REV
8:1	1 OF 1	B