MCP73830/L

Single-Cell Li-Ion/Li-Polymer Battery Charge Management Controllers in 2x2 TDFN

Features:

- Complete Linear Charge Management Controller:
  - Integrated Pass Transistor
  - Integrated Current Sense
  - Integrated Reverse Discharge Protection
- Constant Current/Constant Voltage Operation
- High Accuracy Preset Voltage Regulation:
  - 4.20V ± 0.75%
- Programmable Charge Current:
  - MCP73830L: 20 mA – 200 mA
  - MCP73830: 100 mA – 1000 mA
- Soft-Start to avoid In-Rush Current
- Preconditioning:
  - 10% and no preconditioning
- Fixed Elapse Timer: 0 Hour or 4 Hours
- Fixed Preconditioning Timer: 1 Hour
- Automatic Recharge: No Auto-Recharge is also available with Selected Options
- Automatic End-of-Charge Control Termination:
  - 7.5% and 10%
- Automatic Power-Down when Input Power Removed
- Undervoltage Lockout (UVLO)
- Chip/Charge Enable Pin ($\overline{CE}$)
- Packaging:
  - TDFN-6 (2x2 mm)
- Temperature Range: -40°C to +85°C

Applications:

- Bluetooth Headsets
- Portable Media Players
- Rechargeable 3D Glasses
- Toy and Gaming Controllers

Description:

The MCP73830/L are highly integrated, Li-Ion battery charge management controllers for use in space-limited applications. The MCP73830/L devices provide specific charge algorithms for single-cell Li-Ion/Li-Polymer batteries to achieve optimal capacity and safety in the shortest charging time possible. Along with its small physical size, the low number of external components makes the MCP73830/L ideally suitable for portable applications.

The MCP73830L employs a constant current/constant voltage charge algorithm. The minimum 20 mA regulated constant, fast-charge current enables the design in small Li-Ion batteries and low-supply current applications. The fast-charge, constant current value is set with one external resistor from 20 mA to 200 mA. The MCP73830/L allows up to 1000 mA charge current for applications that require faster constant current.

The MCP73830/L provides a thermal foldback function that limits the charge current based on die temperature during high-power or high-ambient conditions. This thermal regulation optimizes the charge cycle time while maintaining device reliability.

The MCP73830/L is fully specified over the ambient temperature range of -40°C to +85°C. The MCP73830/L is available in a 6 lead, TDFN package.

Package Types (Top View)

MCP73830/L
2x2 TDFN *

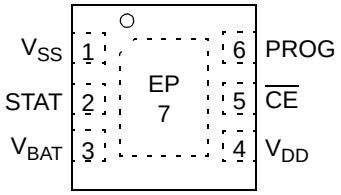

* Includes Exposed Thermal Pad (EP); see Table 3-1.

© 2011-2013 Microchip Technology Inc.

Typical Application

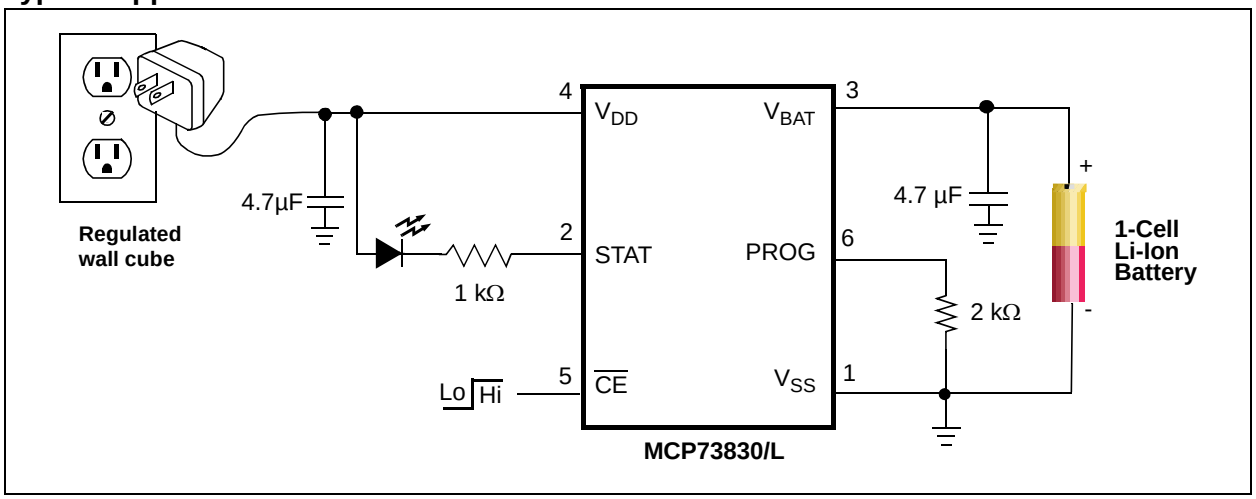

Functional Block Diagram

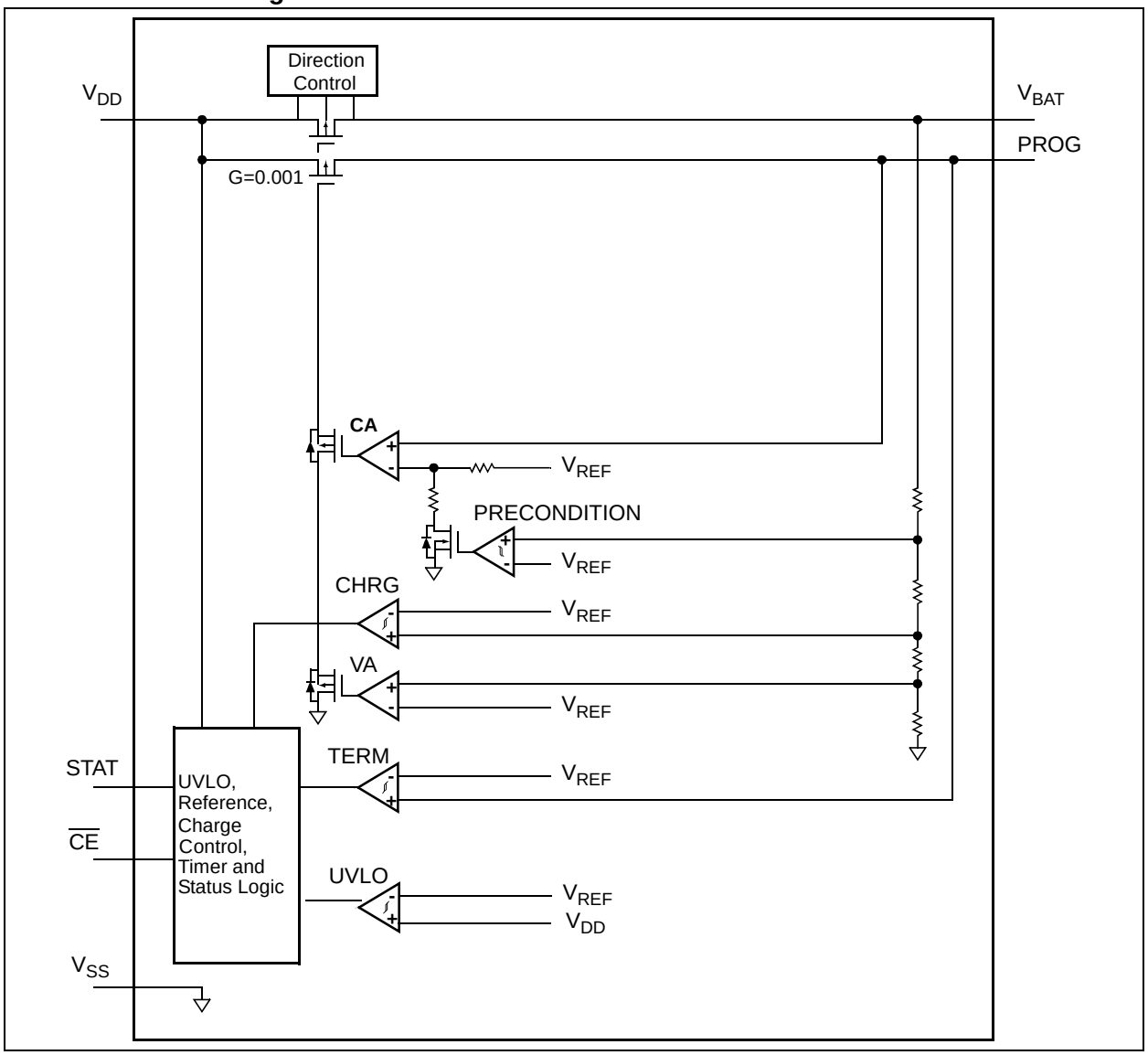

© 2011-2013 Microchip Technology Inc.

1.0 ELECTRICAL CHARACTERISTICS

Absolute Maximum Ratings†

V_{DD}.....7.0V
All Inputs and Outputs w.r.t. V_{SS} ..... -0.3 to (V_{DD}+0.3)V
Maximum Junction Temperature, T_J .....Internally Limited
Storage temperature .....-65°C to +150°C
ESD protection on all pins
Human Body Model (1.5 kW in Series with 100 pF) .....≥ 2 kV
Machine Model (200 pF, No Series Resistance).....300V

† **Notice:** Stresses above those listed under "Maximum Ratings" may cause permanent damage to the device. This is a stress rating only and functional operation of the device at those or any other conditions above those indicated in the operational listings of this specification is not implied. Exposure to maximum rating conditions for extended periods may affect device reliability.

DC CHARACTERISTICS

Electrical Specifications: Unless otherwise indicated, all limits apply for V_{DD}= [V_{REG}(Typical) + 0.3V] to 6V, T_A = -40°C to +85°C. Typical values are at +25°C, V_{DD} = [V_{REG} (Typical) + 1.0V]

Parameters	Sym.	Min.	Typ.	Max.	Units	Conditions
Supply Input						
Input Voltage Range	V_{DD}	3.75	—	6	V	
Supply Current	I_{SS}	—	0.6	2	µA	Shutdown; $V_{DD} \le V_{STOP}$ - 300 mV
		—	500	900	µA	Charging
		—	25	50	µA	Standby; CE = V_{DD}
Battery Discharge Current						
Output Reverse Leakage Current	$I_{DISCHARGE}$		10	15	µA	Charge Complete; V_{DD} is Present
		—	0.5	—	µA	Shutdown ($V_{DD} \le V_{BAT}$, or $V_{DD} < V_{STOP}$)
		—	0.5	—	µA	Standby; CE = V_{DD}
Undervoltage Lockout						
UVLO Start Threshold	V_{START}	3.45	3.6	3.75	V	V_{DD} Low-to-High
UVLO Stop Threshold	V_{STOP}	3.15	3.3	3.45	V	V_{DD} High-to-Low
UVLO Hysteresis	V_{HYS}	—	300	—	mV	
Voltage Regulation (Constant Voltage Mode)						
Regulated Output Voltage Options	V_{REG}	—	4.20	—	V	V_{DD} = [V_{REG}(Typical)+1V] I_{OUT} = 30 mA
Output Voltage Tolerance	V_{RTOL}	-0.75	—	0.75	%	T_A= -5°C to +55°C
Line Regulation	$\lvert(\Delta V_{BAT}/V_{BAT})/\Delta V_{DD}\rvert$	—	0.2	0.3	%/V	V_{DD} = [V_{REG}(Typical)+1V] to 12V I_{OUT} = 30 mA
Load Regulation	$\lvert\Delta V_{BAT}/V_{BAT}\rvert$	—	0.2	0.3	%	I_{OUT} = 30 mA - 150 mA V_{DD} = [V_{REG}(Typical)+1V]
Supply Ripple Attenuation	PSRR		52	—	dB	I_{OUT} = 30 mA, 10 Hz to 1 kHz
			47	—	dB	I_{OUT} = 30 mA, 10 Hz to 10 kHz

Note 1: Not production tested. Ensured by design.

DC CHARACTERISTICS (CONTINUED)

Electrical Specifications: Unless otherwise indicated, all limits apply for V_{DD}= [V_{REG}(Typical) + 0.3V] to 6V, T_A = -40°C to +85°C. Typical values are at +25°C, V_{DD} = [V_{REG} (Typical) + 1.0V]

Parameters	Sym.	Min.	Typ.	Max.	Units	Conditions
Current Regulation (Fast Charge, Constant-Current Mode)						
Fast Charge Current Regulation **MCP73830L**	I_{REG}	20	—	200	mA	
		—	20	—	mA	PROG = 10 kΩ
		—	200	—	mA	PROG = 1 kΩ
Fast Charge Current Regulation **MCP73830**	I_{REG}	100	—	1000	mA	
		—	100	—	mA	PROG = 10 kΩ
		—	1000	—	mA	PROG = 1 kΩ
Charge Current Tolerance	I_{RTOL}	—	10	—	%	V_{DD} = 4.5V, T_A = -5°C to +55°C
Preconditioning Current Regulation (Trickle Charge Constant Current Mode)						
Precondition Current Ratio	I_{PREG}/I_{REG}	—	10	—	%	PROG = 1 kΩ to 10 kΩ
		—	100	—	%	No Preconditioning
Precondition Voltage Threshold Ratio	V_{PTH}/V_{REG}	70	72	75	%	V_{BAT} Low-to-High T_A = -5°C to +55°C
Precondition Hysteresis	V_{PHYS}	—	100	—	mV	
Charge Termination						
Charge Termination Current Ratio	I_{TERM}/I_{REG}	5.6	7.5	9.4	%	PROG = 1 kΩ to 10 kΩ
		8	10	12	%	V_{DD} = 4.5V, T_A=-5°C to +55°C
Automatic Recharge						
Recharge Voltage Threshold Ratio	V_{RTH}/V_{REG}	94.5	96.5	98.5	%	V_{BAT} High-to-Low
		—	0	—	%	No Automatic Recharge
Pass Transistor ON-Resistance						
ON-Resistance	R_{DSON}	—	500	—	mΩ	V_{DD} = 4.5V, T_J = 105°C (**Note 1**)
Status Indicator – STAT						
Sink Current	I_{SINK}	—	16	30	mA	
Low Output Voltage	V_{OL}	—	0.4	1	V	I_{SINK} = 4 mA
Input Leakage Current	I_{LK}	—	0.01	1	µA	High Impedance, V_{DD} on Pin
PROG Input						
Charge Impedance Range	R_{PROG}	1	—	10	kΩ	
Automatic Power Down						
Automatic Power Down Entry Threshold	$V_{PDENTRY}$	—	V_{BAT} + 50 mV	—	V	V_{DD} Falling
Automatic Power Down Exit Threshold	V_{PDEXIT}	—	V_{BAT} + 150 mV	—	V	V_{DD} Rising
Charge Enable ($\overline{CE}$)						
Input High Voltage Level	T_{SD}	1.5	—	—	V	
Input Low Voltage Level	V_{IL}	—	—	0.8	V	
Input Leakage Current	I_{LK}	—	5	8	µA	V_{DD} = 5V T_A= -5°C to +55°C

Note 1: Not production tested. Ensured by design.

© 2011-2013 Microchip Technology Inc.

DC CHARACTERISTICS (CONTINUED)

Electrical Specifications: Unless otherwise indicated, all limits apply for V_{DD}= [V_{REG}(Typical) + 0.3V] to 6V, T_A = -40°C to +85°C. Typical values are at +25°C, V_{DD} = [V_{REG} (Typical) + 1.0V]

Parameters	Sym.	Min.	Typ.	Max.	Units	Conditions
Thermal Shutdown						
Die Temperature	T_{SD}	—	150	—	°C	
Die Temperature Hysteresis	T_{SDHYS}	—	10	—	°C	

Note 1: Not production tested. Ensured by design.

AC CHARACTERISTICS

Electrical Specifications: Unless otherwise specified, all limits apply for V_{DD}= [V_{REG}(Typical)+0.3V] to 6V, T_A = -40°C to +85°C. Typical values are at +25°C, V_{DD}= [V_{REG}(Typical)+1.0V]

Parameters	Sym.	Min.	Typ.	Max.	Units	Conditions
Elapsed Timer						
Elapsed Timer Period	$t_{ELAPSED}$	—	0	—	Hours	Timer Disabled
		3.5	4.0	4.5	Hours	
Preconditioning Timer						
Preconditioning Timer Period	t_{PRECHG}	0.8	1	1.2	Hours	Disabled Timer
Status Indicator						
Status Output Turn-Off	t_{OFF}	—	—	500	µs	I_{SINK} = 1 mA to 0 mA **(Note 1)**
Status Output Turn-On	t_{ON}	—	—	500	µs	I_{SINK} = 0 mA to 1 mA **(Note 1)**

Note 1: Not production tested. Ensured by design.

TEMPERATURE SPECIFICATIONS

Electrical Specifications: Unless otherwise indicated, all limits apply for V_{DD} = [V_{REG} (Typical) + 0.3V] to 6V. Typical values are at +25°C, V_{DD} = [V_{REG} (Typical) + 1.0V]

Parameters	Sym.	Min.	Typ.	Max.	Units	Conditions
Temperature Ranges						
Specified Temperature Range	T_A	-40	—	+85	°C	
Operating Temperature Range	T_J	-40	—	+125	°C	
Storage Temperature Range	T_A	-65	—	+150	°C	
Thermal Package Resistances						
Thermal Resistance, TDFN-6 (2x2)	θ_{JA}	—	91	—	°C/W	4-Layer JC51-7 Standard Board, Natural Convection
	θ_{JC}	—	19	—	°C/W	

© 2011-2013 Microchip Technology Inc.

NOTES:

© 2011-2013 Microchip Technology Inc.

2.0 TYPICAL PERFORMANCE CURVES

Note: The graphs and tables provided following this note are a statistical summary based on a limited number of samples and are provided for informational purposes only. The performance characteristics listed herein are not tested or guaranteed. In some graphs or tables, the data presented may be outside the specified operating range (e.g., outside specified power supply range) and therefore outside the warranted range.

Note: Unless otherwise indicated, V_{DD} = [V_{REG}(Typical) + 1V], I_{OUT} = 30 mA and T_A= +25°C, Constant Voltage mode.

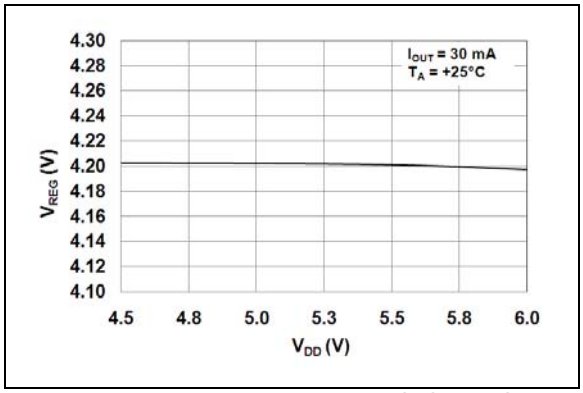

FIGURE 2-1: *Battery Regulation Voltage (V_{BAT}) vs. Supply Voltage (V_{DD}).*

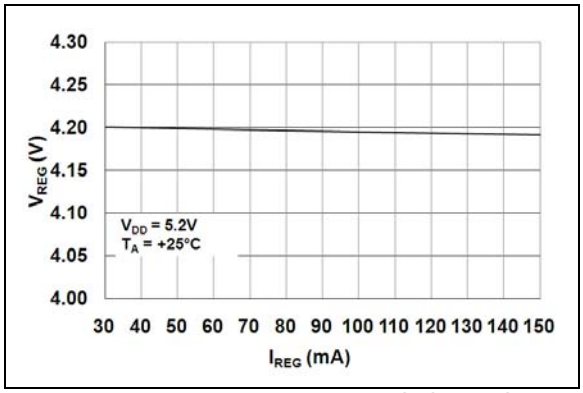

FIGURE 2-4: *Battery Regulation Voltage (V_{BAT}) vs. Charge Current (I_{OUT}).*

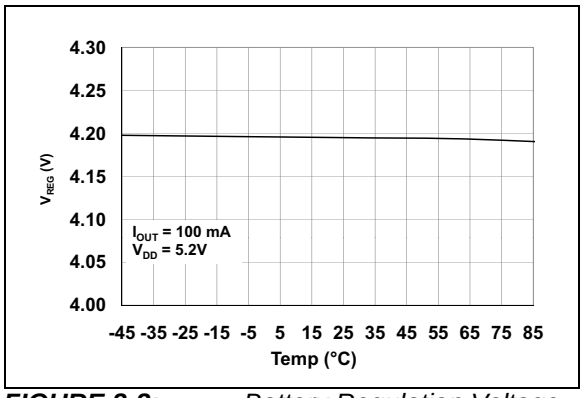

FIGURE 2-2: *Battery Regulation Voltage (V_{BAT}) vs. Ambient Temperature (T_A).*

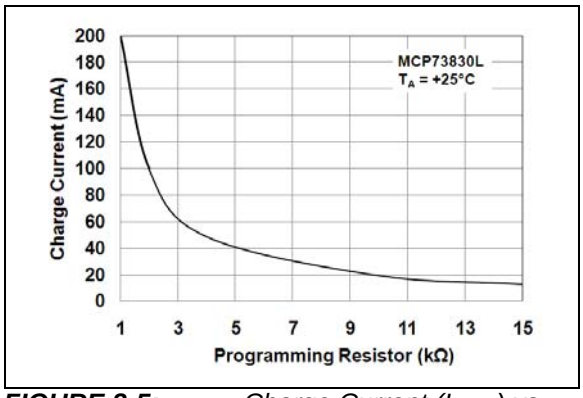

FIGURE 2-5: *Charge Current (I_{OUT}) vs. Programming Resistor (R_{PROG}), MCP73830L.*

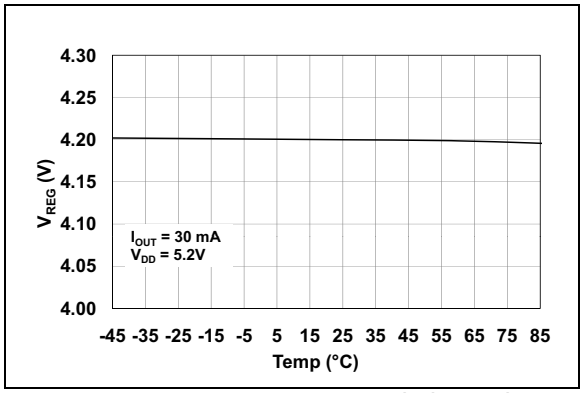

FIGURE 2-3: *Battery Regulation Voltage (V_{BAT}) vs. Ambient Temperature (T_A).*

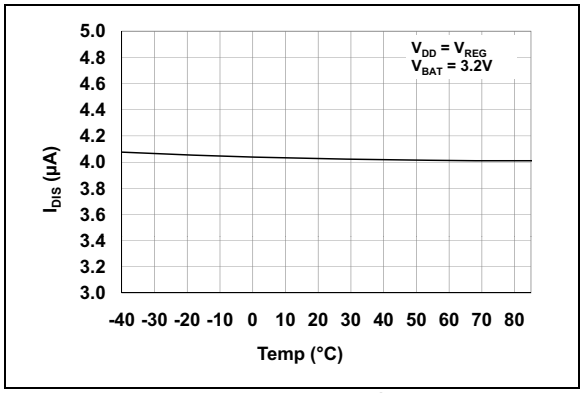

FIGURE 2-6: *Output Leakage Current ($I_{DISCHARGE}$) vs. Ambient Temperature (T_A).*

Note: Unless otherwise indicated, V_{DD} = [V_{REG}(Typical) + 1V], I_{OUT} = 10 mA and T_A= +25°C, Constant Voltage mode.

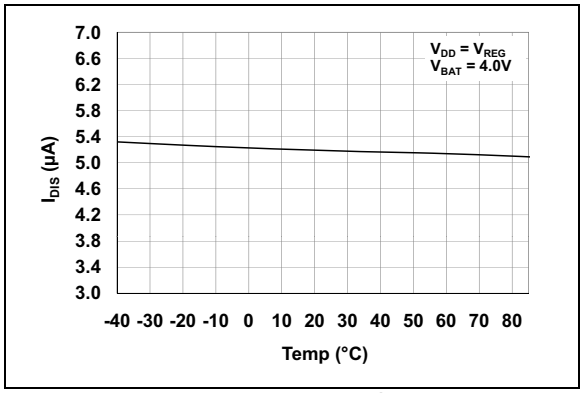

FIGURE 2-7: *Output Leakage Current ($I_{DISCHARGE}$) vs. Ambient Temperature (T_A).*

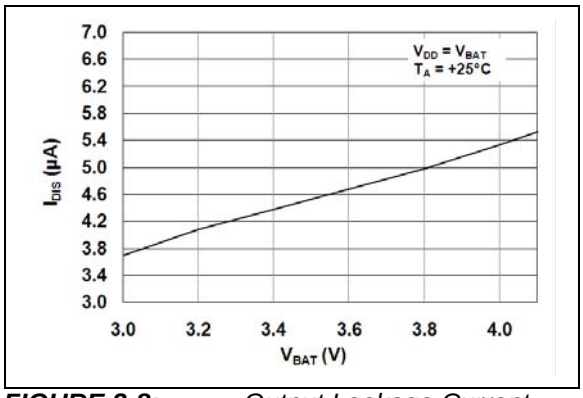

FIGURE 2-8: *Output Leakage Current ($I_{DISCHARGE}$) vs. Battery Regulation Voltage (V_{BAT}).*

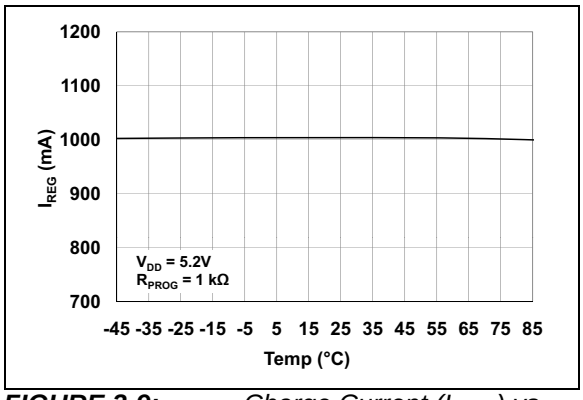

FIGURE 2-9: *Charge Current (I_{OUT}) vs. Ambient Temperature (T_A), MCP73830.*

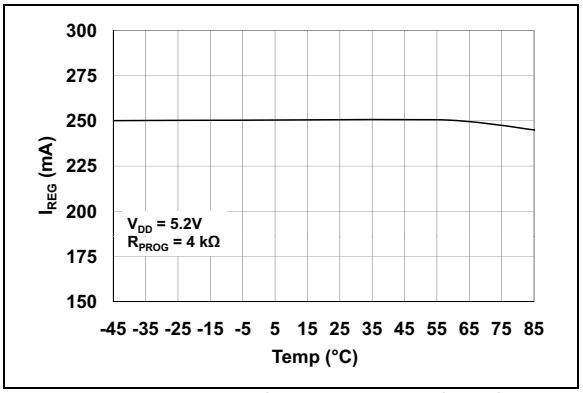

FIGURE 2-10: *Charge Current (I_{OUT}) vs. Ambient Temperature (T_A), MCP73830.*

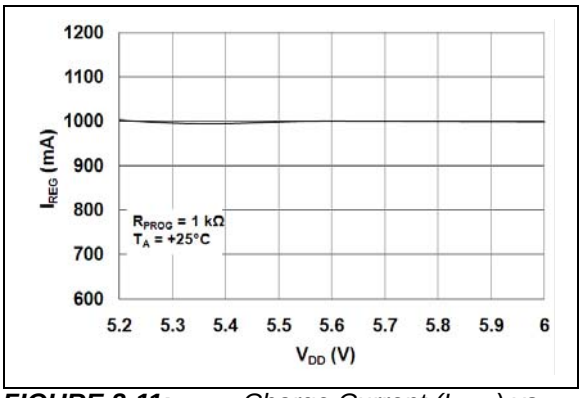

FIGURE 2-11: *Charge Current (I_{OUT}) vs. Supply Voltage (V_{DD}), MCP73830.*

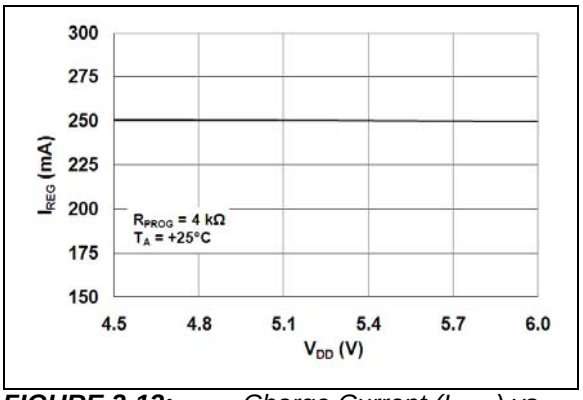

FIGURE 2-12: *Charge Current (I_{OUT}) vs. Supply Voltage (V_{DD}), MCP73830.*

© 2011-2013 Microchip Technology Inc.

3.0 PIN DESCRIPTION

The descriptions of the pins are listed in Table 3-1.

TABLE 3-1: PIN FUNCTION TABLES

MCP73830/L TDFN	Symbol	I/O	Function
1	V_{SS}	—	Battery management 0V reference.
2	STAT	O	Battery charge status output.
3	V_{BAT}	I/O	Charge control output. Regulates the charge current and battery voltage. The pin is disconnected during Shutdown mode.
4	V_{DD}	I	Input power supply.
5	$\overline{CE}$	I	Charge Enable pin. Pull the pin high to disable the device. It is internally pulled down. Leave the pin float if not used.
6	PROG	I/O	Battery charge current regulation program.
7	EP	—	Exposed pad.

3.1 Battery Management Input Supply (V_{DD})

A supply voltage of [V_{REG} (Typical) + 0.3V] to 6.0V is recommended. Bypass to V_{SS} with a minimum of 1 µF.

3.2 Battery Charge Control Output (V_{BAT})

Connect to the positive terminal of the battery. Bypass to V_{SS} with a minimum of 1 µF to ensure loop stability when the battery is disconnected.

3.3 Battery Management 0V Reference (V_{SS})

Connect to the negative terminal of the battery and input supply.

3.4 Status Output (STAT)

STAT is an open-drain logic output for connection to an LED for charge status indication in stand-alone applications. Alternatively, a pull-up resistor can be applied for interfacing to a host microcontroller. Refer to Table 5-1 for a summary of the status output during a charge cycle.

3.5 Current Regulation Set (PROG)

The fast charge current is set by placing a resistor from PROG to V_{SS} during Constant Current (CC) mode.

Refer to **Section 5.4 "Constant Current Mode – Fast Charge"** for details.

3.6 Charge Enable ($\overline{CE}$)

The MCP73830/L is always enabled with an internal pull-down resistor. Pulling the CE pin high will enter Standby mode.

3.7 Exposed Pad (EP)

The Exposed Thermal Pad (EP) should be connected to the exposed copper area on the Printed Circuit Board (PCB) for thermal enhancement purposes. Additional vias on the copper area under the MCP73830/L device can improve the performance of heat dissipation and simplify the assembly process.

NOTES:

© 2011-2013 Microchip Technology Inc.

4.0 DEVICE OVERVIEW

The MCP73830/L are simple, but fully integrated, linear charge management controllers. Figure 4-1 depicts the operational flow algorithm.

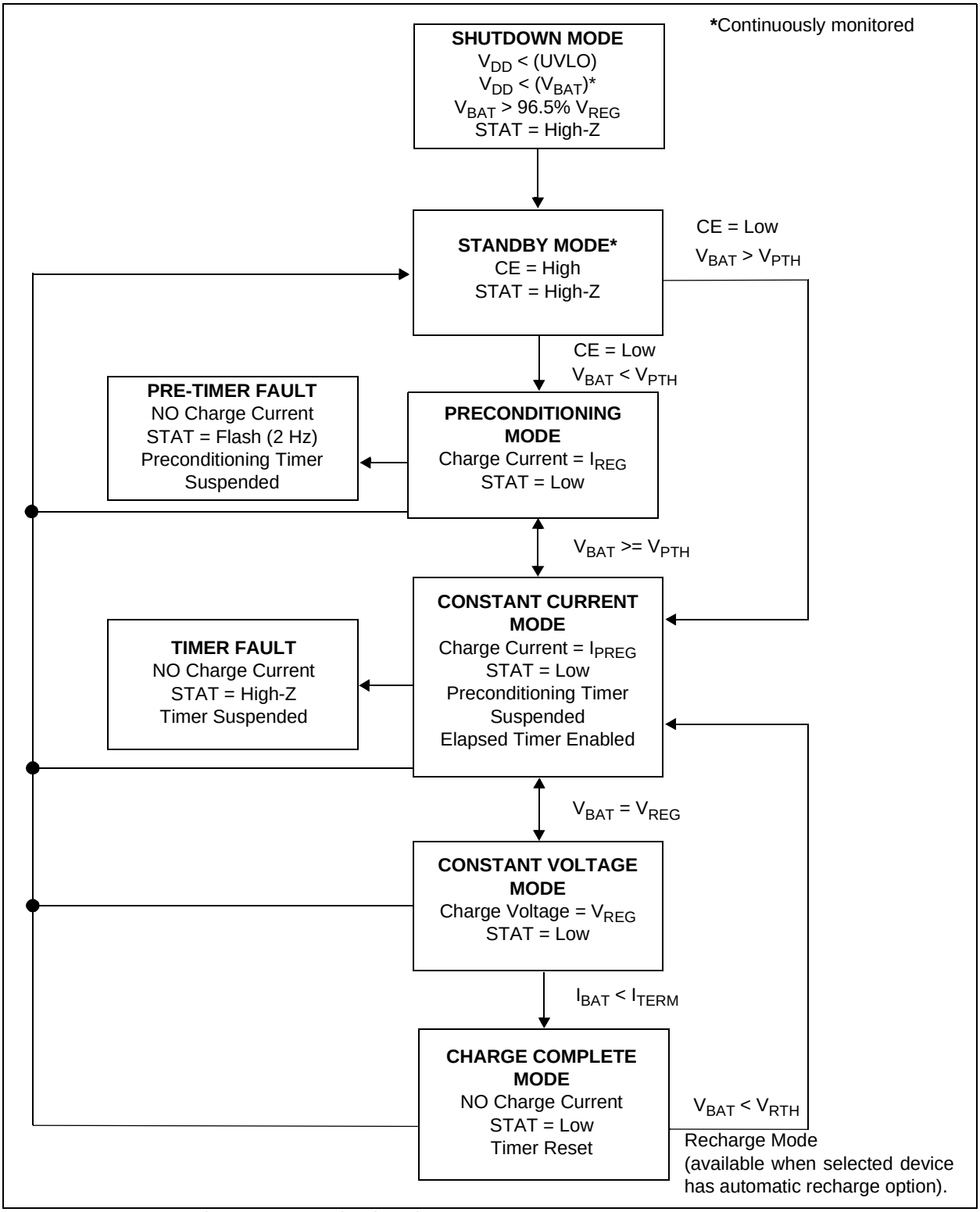

FIGURE 4-1: *The MCP73830/L Flowchart.*

NOTES:

© 2011-2013 Microchip Technology Inc.

5.0 DETAILED DESCRIPTION

5.1 Undervoltage Lockout (UVLO)

An Internal Undervoltage Lockout (UVLO) circuit monitors the input voltage and keeps the charger in Shutdown mode until the input supply rises above the UVLO threshold. In the event a battery is present when the input power is applied, the input supply must rise approximately 150 mV above the battery voltage before the MCP73830/L devices become operational.

The UVLO circuit places the device in Shutdown mode if the input supply falls to approximately 150 mV above the battery voltage. The UVLO circuit is always active. Any time the input supply is below the UVLO threshold, or approximately 150 mV of the voltage at the V_{BAT} pin, the MCP73830/L devices are placed in Shutdown mode.

5.2 Charge Qualification

When the input power is applied, the input supply must rise 150 mV above the battery voltage before the MCP73830/L becomes operational.

The automatic power-down circuit places the device in Shutdown mode if the input supply falls to within +50 mV of the battery voltage.

The automatic circuit is always active. Any time the input supply is within +50 mV of the voltage at the V_{BAT} pin, the MCP73830/L is placed in Shutdown mode.

For a charge cycle to begin, the automatic power-down conditions must be met, and the charge enable input must be above the input high threshold. The battery voltage should be less than 96.5% of V_{REG}.

5.2.1 BATTERY MANAGEMENT INPUT SUPPLY (V_{DD})

The V_{DD} input is the input supply to the MCP73830/L. The MCP73830/L automatically enters Power-Down mode if the voltage on the V_{DD} input falls to within +50 mV of the battery voltage. This feature prevents draining the battery pack when the V_{DD} supply is not present.

5.2.2 BATTERY CHARGE CONTROL OUTPUT (V_{BAT})

The battery charge control output is the drain terminal of an internal P-channel MOSFET. The MCP73830/L provides constant current and voltage regulation to the battery pack by controlling this MOSFET in the linear region. The battery charge control output should be connected to the positive terminal of the battery pack.

5.2.3 BATTERY DETECTION

The MCP73830/L device detects the battery presence by monitoring the voltage at V_{BAT}. The charge flow will initiate when the voltage on V_{BAT} is pulled below the $V_{RECHARGE}$ threshold. Refer to **Section 1.0 "Electrical Characteristics"** for $V_{RECHARGE}$ values. The value will be the same for non-rechargeable devices.

When $V_{BAT} > V_{REG}$ + Hysteresis, the charge will be suspended or not started, depending on the condition, to prevent the overcharge that may occur.

5.3 Preconditioning

If the voltage at the V_{BAT} pin is less than the preconditioning threshold, the MCP73830/L devices enter Preconditioning mode. The preconditioning threshold is factory set. Refer to **Section 1.0 "Electrical Characteristics"** for preconditioning threshold options.

In this mode, the MCP73830/L devices supply 10% of the fast charge current (established with the value of the resistor connected to the PROG pin) to the battery.

When the voltage at the V_{BAT} pin rises above the preconditioning threshold, the MCP73830/L device enters the Constant Current (Fast Charge) mode.

Note:	The MCP73830/L devices also offer options with no preconditioning.

5.3.1 TIMER EXPIRED DURING PRECONDITIONING MODE

If the internal timer expires before the voltage threshold is reached for Fast Charge mode, a timer fault is indicated, and the charge cycle terminates. The MCP73830/L devices remain in this condition until the battery is removed, the input power is cycled, or $\overline{CE}$ is toggled. If the battery is removed, the MCP73830/L devices enter Standby mode, where they remain until a battery is reinserted.

Note:	The typical preconditioning timers for the MCP73830/L are 60 minutes. The MCP73830/L also offers options with no preconditioning timer.

5.4 Constant Current Mode – Fast Charge

During Constant Current mode, the programmed charge current is supplied to the battery or load.

The charge current is established using a single resistor from PROG to V_{SS}. The program resistor and the charge current are calculated using the following equation:

EQUATION 5-1: MCP73830L

$$I_{REG} = \frac{200}{R_{PROG}}$$

Where:

R_{PROG} = kilo-ohms (kΩ)

I_{REG} = milliampere (mA)

EQUATION 5-2: MCP73830

$$I_{REG} = \frac{1000}{R_{PROG}}$$

Where:

R_{PROG} = kilo-ohms (kΩ)

I_{REG} = milliampere (mA)

Constant Current mode is maintained until the voltage at the V_{BAT} pin reaches the regulation voltage, V_{REG}. When Constant Current mode is invoked, the internal timer is reset.

5.4.1 TIMER EXPIRED DURING CONSTANT CURRENT – FAST CHARGE MODE

If the internal 4-hour timer expires before the recharge voltage threshold is reached, a timer fault is indicated and the charge cycle terminates. The MCP73830/L devices remain in this condition until the battery is reinserted, or the input power or $\overline{CE}$ is cycled.

5.5 Constant Voltage Mode

When voltage at the V_{BAT} pin reaches the regulation voltage, V_{REG}, the constant voltage regulation begins. The regulation voltage is factory set to 4.2V, with a tolerance of ±0.75%.

5.6 Charge Termination

The charge cycle is terminated when, during Constant Voltage mode, the average charge current diminishes below a threshold established with the value of 7.5%, 10% of fast charge current, or the internal timer has expired. A 1 ms filter time on the termination comparator ensures that transient load conditions do not result in premature charge cycle termination. The timer period is factory set and no timer option is available. Refer to **Section 1.0 "Electrical Characteristics"** for timer period options.

5.7 Automatic Recharge

MCP73830/L devices with automatic recharge options continuously monitor the voltage at the V_{BAT} pin during the Charge Complete mode. If the voltage drops below the recharge threshold, another charge cycle begins, and current is once again supplied to the battery or load. The recharge threshold is factory set. Refer to **Section 1.0 "Electrical Characteristics"** for recharge threshold options.

Note:	The MCP73830/L also offer options with no automatic recharge.

For the MCP73830/L with no recharge option, the devices will go into Standby mode when a termination condition is met. The charge will not restart until one of the following conditions is met:

- Battery is removed from the system and inserted again.
- V_{DD} is removed and plugged in again
- $\overline{CE}$ is cycled.

5.8 Thermal Regulation

The MCP73830/L should limit the charge currents based on the die temperature. The thermal regulation optimizes the charge cycle time while maintaining device reliability. Figure 5-1 depicts the thermal regulation for the MCP73830/L devices. Refer to **Section 1.0 "Electrical Characteristics"** for thermal package resistances, and **Section 6.1.1.2 "Thermal Considerations"** for calculating power dissipation.

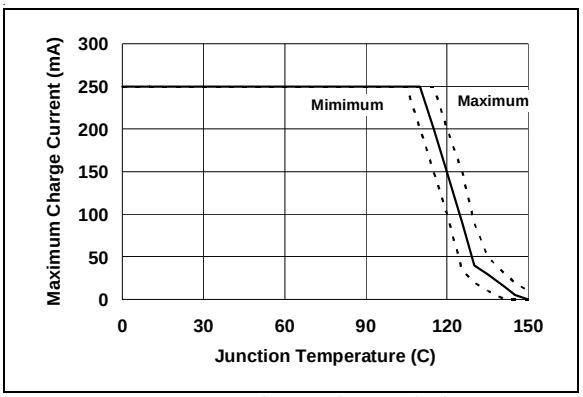

FIGURE 5-1: *Thermal Regulation.*

© 2011-2013 Microchip Technology Inc.

5.9 Thermal Shutdown

The MCP73830/L suspends charging if the die temperature exceeds +150°C. Charging will resume when the die temperature has cooled by approximately 10°C. The thermal shutdown is a secondary safety feature in the event that there is a failure within the thermal regulation circuitry.

5.10 Status Indicator

The charge status output of the MCP73830/L is open-drain, and, as such, has two different states: Low (L), and High-Impedance (High-Z). The charge status outputs can be used to illuminate the LEDs. Optionally, the charge status output can be used as an interface to a host microcontroller. The faulty indication of a preconditioning timer also indicates defective batteries, when it fails to pass preconditioning threshold during the given time.

Table 5-1 summarizes the state of the status outputs during a charge cycle.

TABLE 5-1: STATUS OUTPUTS

Charge Cycle State	STAT
Shutdown	High-Z
No Battery Present	High-Z
Preconditioning	L
Constant Current Fast Charge	L
Constant Voltage	L
Charge Complete – Standby	High-Z
Timer Fault	High-Z
Preconditioning Timer Fault	Flashing (2 Hz)

NOTES:

© 2011-2013 Microchip Technology Inc.

6.0 APPLICATIONS

The MCP73830 is designed to operate in conjunction with a host microcontroller or in stand-alone applications. The MCP73830/L provides the preferred charge algorithm for dual Lithium-Ion or Lithium-Polymer cell's constant current, followed by constant voltage. Figure 6-1 depicts a typical stand-alone application circuit, while Figure 6-2 depicts the accompanying charge profile.

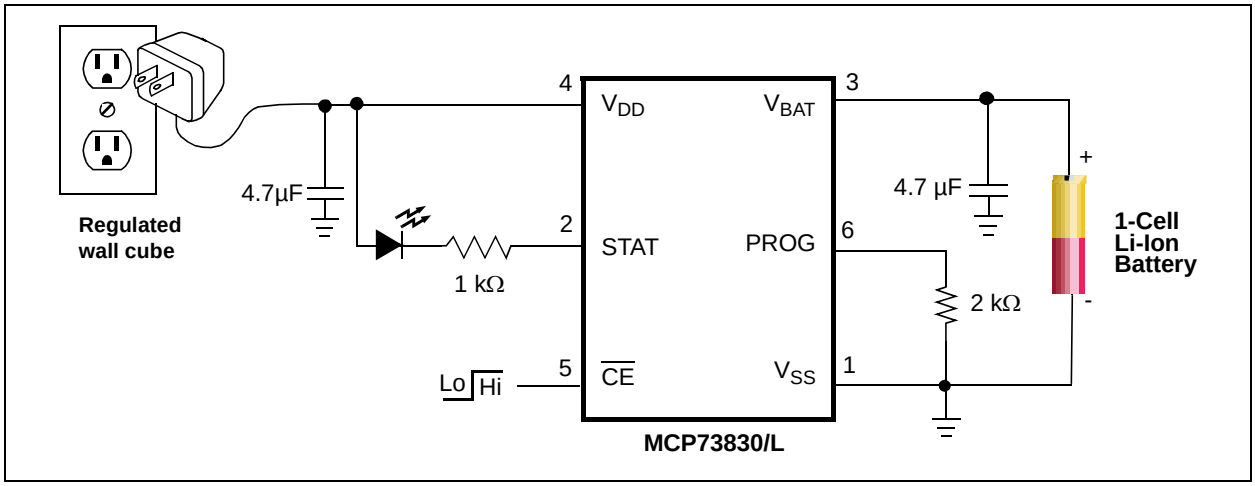

FIGURE 6-1: *Typical Application Circuit.*

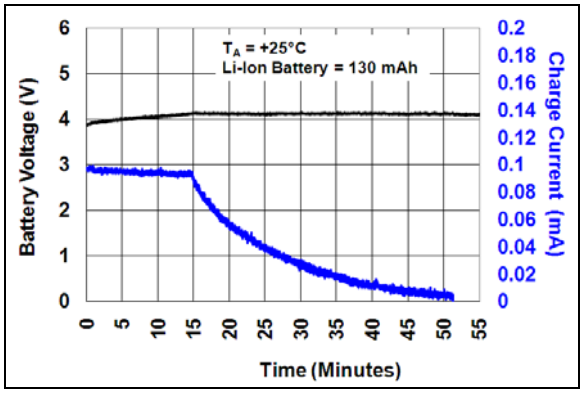

FIGURE 6-2: *Typical Charge Profile (Li-Ion Battery).*

6.1 Application Circuit Design

Due to the low efficiency of linear charging, the most important factors are thermal design and cost, which are a direct function of the input voltage, output current and thermal impedance between the battery charger and the ambient cooling air. The worst-case situation is when the device has transitioned from Preconditioning mode to Constant Current mode. In this situation, the battery charger has to dissipate the maximum power. A trade-off must be made between the charge current, cost and thermal requirements of the charger.

6.1.1 COMPONENT SELECTION

Selection of the external components in Figure 6-1 is crucial to the integrity and reliability of the charging system. The following discussion is intended as a guide for the component selection process.

6.1.1.1 Charge Current

The preferred fast charge current for Li-Ion/Li-Poly cells is below the 1C rate, with an absolute maximum current at the 2C rate. **The recommended fast charge current should be obtained from the battery manufacturer.** For example, a 500 mAh battery pack with 0.7C preferred fast charge current has a charge current of 350 mA. Charging at this rate provides the shortest charge cycle times without degradation to the battery pack performance or life.

Note:	Please consult with your battery supplier, or refer to the battery data sheet, for the preferred charge rate.

6.1.1.2 Thermal Considerations

The worst-case power dissipation in the battery charger occurs when the input voltage is at the maximum and the device has transitioned from Preconditioning mode to Constant Current mode. In this case, the power dissipation is:

EQUATION 6-1:

$$PowerDissipation = (V_{DDMAX} - V_{PTHMIN}) \times I_{REGMAX}$$

Where:

V_{DDMAX} = the maximum input voltage

I_{REGMAX} = the maximum fast charge current

V_{PTHMIN} = the minimum transition threshold voltage

Power dissipation with a 5V, ±10% input voltage source, 200 mA ±10%, and preconditioning threshold voltage at 6V is:

EQUATION 6-2:

$$PowerDissipation = (5.5V - 3.0V) \times 220mA = 0.55W$$

This power dissipation with the battery charger in the 2x2 TDFN-6 package will result in a temperature of approximately 10.45°C (PCB mounted) above room temperature.

6.1.1.3 External Capacitors

The MCP73830 is stable with or without a battery load. In order to maintain good AC stability in Constant Voltage mode, a minimum capacitance of 1 µF is recommended to bypass the V_{BAT} pin to V_{SS}. This capacitance provides compensation when there is no battery load. In addition, the battery and interconnections appear inductive at high frequencies. These elements are in the control feedback loop during Constant Voltage mode. Therefore, the bypass capacitance may be necessary to compensate for the inductive nature of the battery pack.

A minimum of 16V rated 1 µF is recommended to apply for output capacitor, and a minimum of 25V rated 1 µF is recommended to apply for input capacitor for typical applications.

TABLE 6-1: MLCC CAPACITOR EXAMPLE

MLCC Capacitors	Temperature Range	Tolerance
X7R	-55°C to + 125°C	±15%
X5R	-55°C to + 85°C	±15%

Virtually any good quality output filter capacitor can be used independent of the capacitor's minimum Effective Series Resistance (ESR) value. The actual value of the capacitor (and its associated ESR) depends on the output load current. A 1 µF ceramic, tantalum or aluminum electrolytic capacitor at the output is usually sufficient to ensure stability.

6.1.1.4 Reverse-Blocking Protection

The MCP73830/L provides protection from a faulted or shorted input. Without the protection, a faulted or shorted input would discharge the battery pack through the body diode of the internal pass transistor.

6.2 PCB Layout Issues

For optimum voltage regulation, place the battery pack as close as possible to the device's V_{BAT} and V_{SS} pins, which is recommended to minimize voltage drops along the high current carrying PCB traces.

If the PCB layout is used as a heat sink, adding many vias in the heat sink pad can help conduct more heat to the backplane of the PCB, thus reducing the maximum junction temperature. Figure 6-4 and Figure 6-5 depict a typical layout with PCB heat sinking.

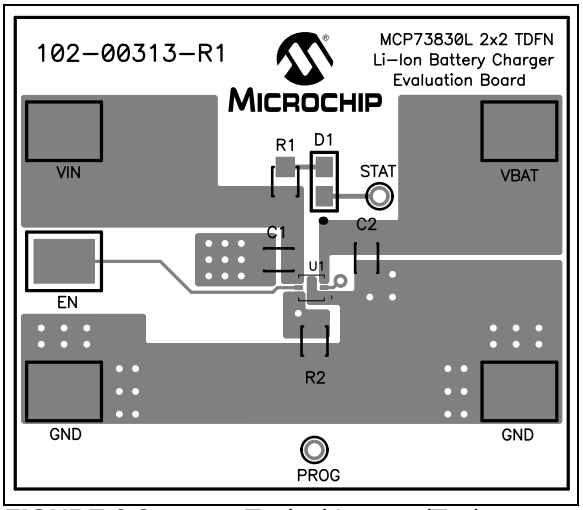

FIGURE 6-3: *Typical Layout (Top).*

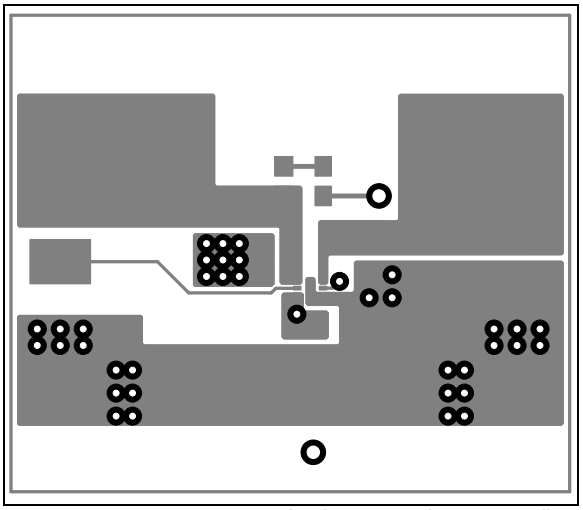

FIGURE 6-4: *Typical Layout (Top Metal).*

© 2011-2013 Microchip Technology Inc.

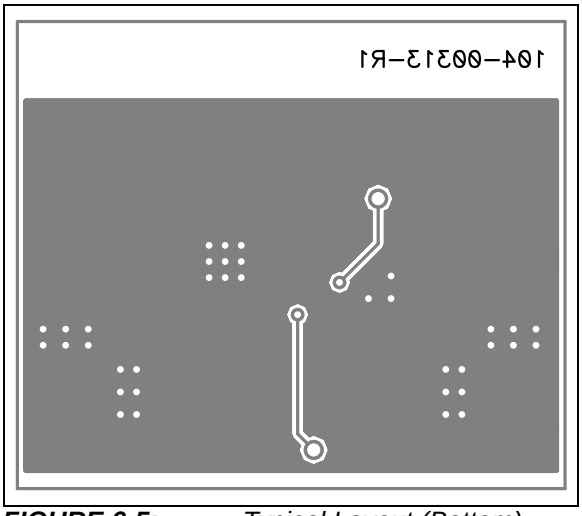

FIGURE 6-5: *Typical Layout (Bottom).*

NOTES:

© 2011-2013 Microchip Technology Inc.

7.0 PACKAGING INFORMATION

7.1 Package Marking Information

6-Lead TDFN (2x2 mm)

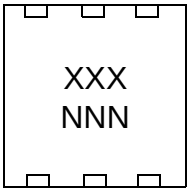

Part Number	Code
MCP73830T-2AAI/MYY	2AA
MCP73830LT-0AAI/MYY	0AA
MCP73830LT-0BCI/MYY	0BC

Example

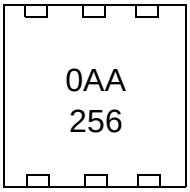

Legend:	XX...X	Customer-specific information
	Y	Year code (last digit of calendar year)
	YY	Year code (last 2 digits of calendar year)
	WW	Week code (week of January 1 is week ‘01’)
	NNN	Alphanumeric traceability code
	(e3)	Pb-free JEDEC designator for Matte Tin (Sn)
	*	This package is Pb-free. The Pb-free JEDEC designator ((e3)) can be found on the outer packaging for this package.

Note: In the event the full Microchip part number cannot be marked on one line, it will be carried over to the next line, thus limiting the number of available characters for customer-specific information.

6-Lead Plastic Thin Dual Flat, No Lead Package (MY) – 2x2x0.8 mm Body [TDFN]

Note: For the most current package drawings, please see the Microchip Packaging Specification located at http://www.microchip.com/packaging

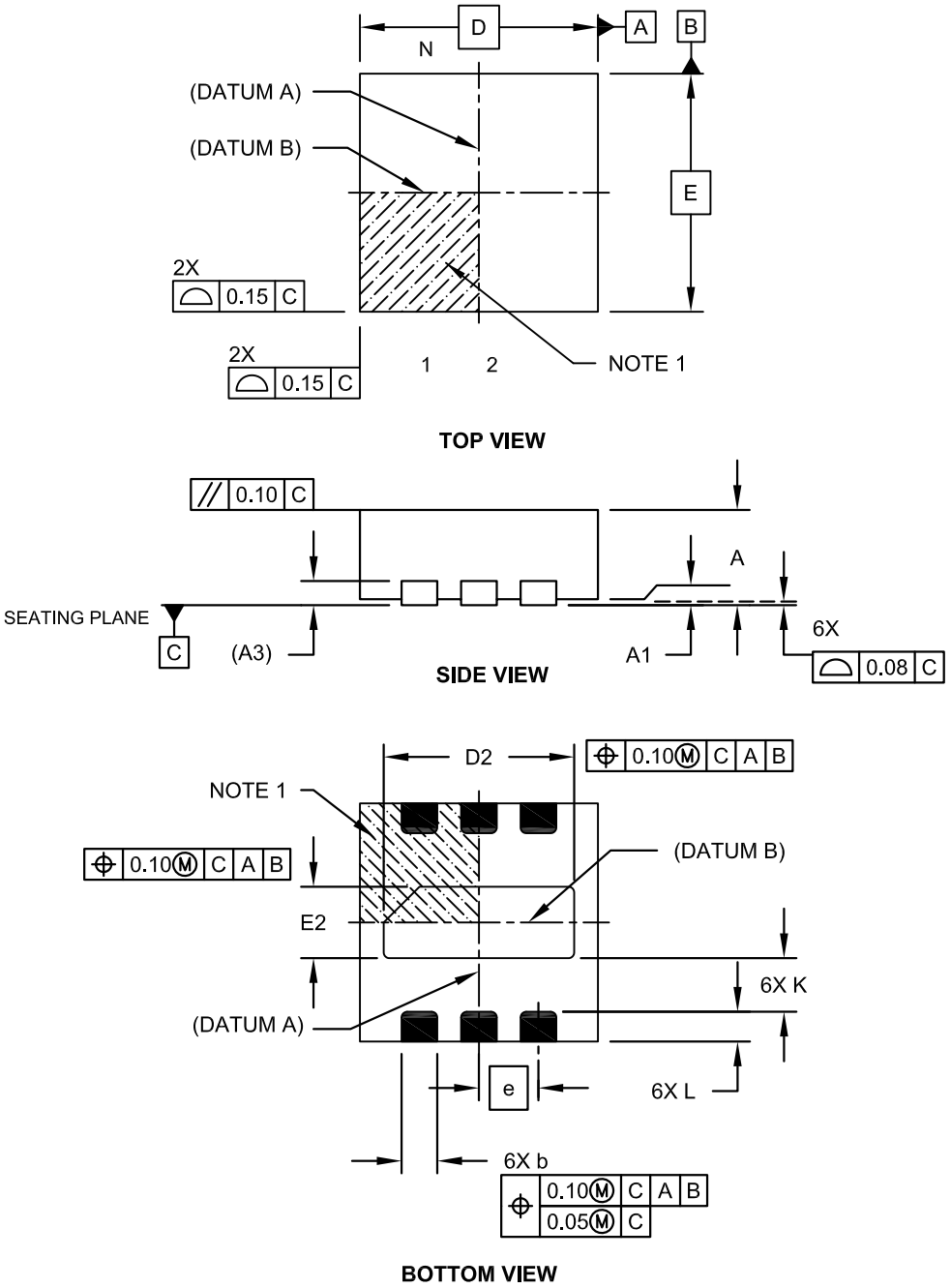

Microchip Technology Drawing C04-078A Sheet 1 of 2

© 2011-2013 Microchip Technology Inc.

6-Lead Plastic Thin Dual Flat, No Lead Package (MY) – 2x2x0.8 mm Body [TDFN]

Note: For the most current package drawings, please see the Microchip Packaging Specification located at http://www.microchip.com/packaging

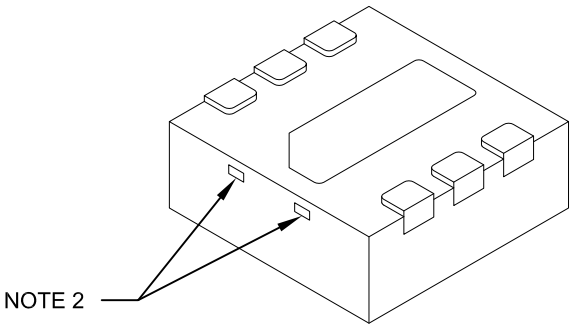

Units		MILLIMETERS		
Dimension Limits		MIN	NOM	MAX
Number of Pins	N	6		
Pitch	e	0.50 BSC		
Overall Height	A	0.70	0.75	0.80
Standoff	A1	0.00	0.02	0.05
Contact Thickness	A3	0.20 REF		
Overall Width	E	2.00 BSC		
Exposed Pad Width	E2	0.55	0.60	0.65
Overall Length	D	2.00 BSC		
Exposed Pad Length	D2	1.55	1.60	1.65
Contact Width	b	0.25	0.30	0.35
Contact Length	L	0.20	0.25	0.30
Contact-to-Exposed Pad	K	0.20	-	-

Notes:

1. Pin 1 visual index feature may vary, but must be located within the hatched area.
2. Package may have one or more exposed tie bars at ends.
3. Package is saw singulated.
4. Dimensioning and tolerancing per ASME Y14.5M.
   BSC: Basic Dimension. Theoretically exact value shown without tolerances.
   REF: Reference Dimension, usually without tolerance, for information purposes only.

Microchip Technology Drawing C04-078A Sheet 2 of 2

NOTES:

© 2011-2013 Microchip Technology Inc.

APPENDIX A: REVISION HISTORY

Revision C (August 2013)

The following is the list of modifications:

1. Updated the Temperature Specifications table.
2. Updated **Section 6.1.1.2 "Thermal Considerations"**.

Revision B (December 2011)

The following is the list of modifications:

1. Updated Figure 4-1.
2. Removed the MCP73830 and MCP73830L options from the Product Identification System section.

Revision A (September 2011)

- Original Release of this Document.

NOTES:

© 2011-2013 Microchip Technology Inc.

PRODUCT IDENTIFICATION SYSTEM

To order or obtain information, e.g., on pricing or delivery, refer to the factory or the listed sales office.

PART NO.	-XXX	X	XX
Device	Standard Options	Temperature Range	Package

Device: MCP73830T: Single Cell Li-Ion/Li-Polymer Battery Device, Tape and Reel
MCP73830LT: Single Cell Li-Ion/Li-Polymer Battery Device, Tape and Reel

Standard Options:

		I_{REG} (mA)	V_{REG} (V)	$I_{PRECONDITION}$ (%)	$V_{PRECONDITION}$ (%)	I_{TERM} (%)	R_{TH} (%)
MCP73830LT	0AA	200	4.2	10	71.5	7.5	96.5
MCP73830LT	0BC	200	4.2	100	71.5	10	96.5
MCP73830T	2AA	1000	4.2	10	71.5	7.5	96.5

Temperature Range: I = -40°C to +85°C (Industrial)

Package: MY = Plastic Thin Dual Flat, No Lead Package, 2x2x0.8 mm Body (TDFN), 6-Lead

* Y = nickel palladium gold manufacturing designator. Only available on the TDFN package.

Examples:

a) MCP73830T-2AAI/MYY: Tape and Reel, Single Cell Li-Ion/Li-Polymer Battery Device

b) MCP73830LT-0AAI/MYY: Tape and Reel, Single Cell Li-Ion/Li-Polymer Battery Device

c) MCP73830LT-0BCI/MYY: Tape and Reel, Single Cell Li-Ion/Li-Polymer Battery Device

NOTES:

© 2011-2013 Microchip Technology Inc.

Note the following details of the code protection feature on Microchip devices:

- Microchip products meet the specification contained in their particular Microchip Data Sheet.
- Microchip believes that its family of products is one of the most secure families of its kind on the market today, when used in the intended manner and under normal conditions.
- There are dishonest and possibly illegal methods used to breach the code protection feature. All of these methods, to our knowledge, require using the Microchip products in a manner outside the operating specifications contained in Microchip's Data Sheets. Most likely, the person doing so is engaged in theft of intellectual property.
- Microchip is willing to work with the customer who is concerned about the integrity of their code.
- Neither Microchip nor any other semiconductor manufacturer can guarantee the security of their code. Code protection does not mean that we are guaranteeing the product as "unbreakable."

Code protection is constantly evolving. We at Microchip are committed to continuously improving the code protection features of our products. Attempts to break Microchip's code protection feature may be a violation of the Digital Millennium Copyright Act. If such acts allow unauthorized access to your software or other copyrighted work, you may have a right to sue for relief under that Act.

Information contained in this publication regarding device applications and the like is provided only for your convenience and may be superseded by updates. It is your responsibility to ensure that your application meets with your specifications. MICROCHIP MAKES NO REPRESENTATIONS OR WARRANTIES OF ANY KIND WHETHER EXPRESS OR IMPLIED, WRITTEN OR ORAL, STATUTORY OR OTHERWISE, RELATED TO THE INFORMATION, INCLUDING BUT NOT LIMITED TO ITS CONDITION, QUALITY, PERFORMANCE, MERCHANTABILITY OR FITNESS FOR PURPOSE**.** Microchip disclaims all liability arising from this information and its use. Use of Microchip devices in life support and/or safety applications is entirely at the buyer's risk, and the buyer agrees to defend, indemnify and hold harmless Microchip from any and all damages, claims, suits, or expenses resulting from such use. No licenses are conveyed, implicitly or otherwise, under any Microchip intellectual property rights.

QUALITY MANAGEMENT SYSTEM
CERTIFIED BY DNV
═ ISO/TS 16949 ═

Trademarks

The Microchip name and logo, the Microchip logo, dsPIC, FlashFlex, KEELOQ, KEELOQ logo, MPLAB, PIC, PICmicro, PICSTART, PIC^{32} logo, rfPIC, SST, SST Logo, SuperFlash and UNI/O are registered trademarks of Microchip Technology Incorporated in the U.S.A. and other countries.

FilterLab, Hampshire, HI-TECH C, Linear Active Thermistor, MTP, SEEVAL and The Embedded Control Solutions Company are registered trademarks of Microchip Technology Incorporated in the U.S.A.

Silicon Storage Technology is a registered trademark of Microchip Technology Inc. in other countries.

Analog-for-the-Digital Age, Application Maestro, BodyCom, chipKIT, chipKIT logo, CodeGuard, dsPICDEM, dsPICDEM.net, dsPICworks, dsSPEAK, ECAN, ECONOMONITOR, FanSense, HI-TIDE, In-Circuit Serial Programming, ICSP, Mindi, MiWi, MPASM, MPF, MPLAB Certified logo, MPLIB, MPLINK, mTouch, Omniscient Code Generation, PICC, PICC-18, PICDEM, PICDEM.net, PICkit, PICtail, REAL ICE, rfLAB, Select Mode, SQI, Serial Quad I/O, Total Endurance, TSHARC, UniWinDriver, WiperLock, ZENA and Z-Scale are trademarks of Microchip Technology Incorporated in the U.S.A. and other countries.

SQTP is a service mark of Microchip Technology Incorporated in the U.S.A.

GestIC and ULPP are registered trademarks of Microchip Technology Germany II GmbH & Co. KG, a subsidiary of Microchip Technology Inc., in other countries.

All other trademarks mentioned herein are property of their respective companies.

© 2011-2013, Microchip Technology Incorporated, Printed in the U.S.A., All Rights Reserved.

Printed on recycled paper.

ISBN: 978-1-62077-419-9

Microchip received ISO/TS-16949:2009 certification for its worldwide headquarters, design and wafer fabrication facilities in Chandler and Tempe, Arizona; Gresham, Oregon and design centers in California and India. The Company's quality system processes and procedures are for its PIC® MCUs and dsPIC® DSCs, KEELOQ® code hopping devices, Serial EEPROMs, microperipherals, nonvolatile memory and analog products. In addition, Microchip's quality system for the design and manufacture of development systems is ISO 9001:2000 certified.

Worldwide Sales and Service

AMERICAS

Corporate Office
2355 West Chandler Blvd.
Chandler, AZ 85224-6199
Tel: 480-792-7200
Fax: 480-792-7277
Technical Support:
http://www.microchip.com/support
Web Address:
www.microchip.com

Atlanta
Duluth, GA
Tel: 678-957-9614
Fax: 678-957-1455

Boston
Westborough, MA
Tel: 774-760-0087
Fax: 774-760-0088

Chicago
Itasca, IL
Tel: 630-285-0071
Fax: 630-285-0075

Cleveland
Independence, OH
Tel: 216-447-0464
Fax: 216-447-0643

Dallas
Addison, TX
Tel: 972-818-7423
Fax: 972-818-2924

Detroit
Farmington Hills, MI
Tel: 248-538-2250
Fax: 248-538-2260

Indianapolis
Noblesville, IN
Tel: 317-773-8323
Fax: 317-773-5453

Los Angeles
Mission Viejo, CA
Tel: 949-462-9523
Fax: 949-462-9608

Santa Clara
Santa Clara, CA
Tel: 408-961-6444
Fax: 408-961-6445

Toronto
Mississauga, Ontario, Canada
Tel: 905-673-0699
Fax: 905-673-6509

ASIA/PACIFIC

Asia Pacific Office
Suites 3707-14, 37th Floor
Tower 6, The Gateway
Harbour City, Kowloon
Hong Kong
Tel: 852-2401-1200
Fax: 852-2401-3431

Australia - Sydney
Tel: 61-2-9868-6733
Fax: 61-2-9868-6755

China - Beijing
Tel: 86-10-8569-7000
Fax: 86-10-8528-2104

China - Chengdu
Tel: 86-28-8665-5511
Fax: 86-28-8665-7889

China - Chongqing
Tel: 86-23-8980-9588
Fax: 86-23-8980-9500

China - Hangzhou
Tel: 86-571-2819-3187
Fax: 86-571-2819-3189

China - Hong Kong SAR
Tel: 852-2943-5100
Fax: 852-2401-3431

China - Nanjing
Tel: 86-25-8473-2460
Fax: 86-25-8473-2470

China - Qingdao
Tel: 86-532-8502-7355
Fax: 86-532-8502-7205

China - Shanghai
Tel: 86-21-5407-5533
Fax: 86-21-5407-5066

China - Shenyang
Tel: 86-24-2334-2829
Fax: 86-24-2334-2393

China - Shenzhen
Tel: 86-755-8864-2200
Fax: 86-755-8203-1760

China - Wuhan
Tel: 86-27-5980-5300
Fax: 86-27-5980-5118

China - Xian
Tel: 86-29-8833-7252
Fax: 86-29-8833-7256

China - Xiamen
Tel: 86-592-2388138
Fax: 86-592-2388130

China - Zhuhai
Tel: 86-756-3210040
Fax: 86-756-3210049

ASIA/PACIFIC

India - Bangalore
Tel: 91-80-3090-4444
Fax: 91-80-3090-4123

India - New Delhi
Tel: 91-11-4160-8631
Fax: 91-11-4160-8632

India - Pune
Tel: 91-20-2566-1512
Fax: 91-20-2566-1513

Japan - Osaka
Tel: 81-6-6152-7160
Fax: 81-6-6152-9310

Japan - Tokyo
Tel: 81-3-6880- 3770
Fax: 81-3-6880-3771

Korea - Daegu
Tel: 82-53-744-4301
Fax: 82-53-744-4302

Korea - Seoul
Tel: 82-2-554-7200
Fax: 82-2-558-5932 or
82-2-558-5934

Malaysia - Kuala Lumpur
Tel: 60-3-6201-9857
Fax: 60-3-6201-9859

Malaysia - Penang
Tel: 60-4-227-8870
Fax: 60-4-227-4068

Philippines - Manila
Tel: 63-2-634-9065
Fax: 63-2-634-9069

Singapore
Tel: 65-6334-8870
Fax: 65-6334-8850

Taiwan - Hsin Chu
Tel: 886-3-5778-366
Fax: 886-3-5770-955

Taiwan - Kaohsiung
Tel: 886-7-213-7828
Fax: 886-7-330-9305

Taiwan - Taipei
Tel: 886-2-2508-8600
Fax: 886-2-2508-0102

Thailand - Bangkok
Tel: 66-2-694-1351
Fax: 66-2-694-1350

EUROPE

Austria - Wels
Tel: 43-7242-2244-39
Fax: 43-7242-2244-393

Denmark - Copenhagen
Tel: 45-4450-2828
Fax: 45-4485-2829

France - Paris
Tel: 33-1-69-53-63-20
Fax: 33-1-69-30-90-79

Germany - Munich
Tel: 49-89-627-144-0
Fax: 49-89-627-144-44

Italy - Milan
Tel: 39-0331-742611
Fax: 39-0331-466781

Netherlands - Drunen
Tel: 31-416-690399
Fax: 31-416-690340

Spain - Madrid
Tel: 34-91-708-08-90
Fax: 34-91-708-08-91

UK - Wokingham
Tel: 44-118-921-5869
Fax: 44-118-921-5820

11/29/12

© 2011-2013 Microchip Technology Inc.