THIS DRAWING IS UNPUBLISHED. RELEASED FOR PUBLICATION -,- .
© COPYRIGHT - By - ALL RIGHTS RESERVED.

LOC	DIST
A1	—

REVISIONS

P	LTR	DESCRIPTION	DATE	DWN	APVD
	C1	Hsg mat change to readily available PBT resin	08JAN2014	PS	JK

POS. PER ROW 'N'	L	PART NUMBER	
–	–	–	
2	5.08	829 576-2	
3	7.62	-3	
4	10.16	~~-4~~	OBSOLETE
5	12.70	~~-5~~	OBSOLETE
6	15.24	~~-6~~	OBSOLETE
7	17.78	-7	
8	20.32	-8	
9	22.86	-9	
10	25.40	1-0	
11	27.94	~~1-1~~	OBSOLETE
12	30.48	1-2	
13	33.02	~~1-3~~	OBSOLETE
14	35.56	~~1-4~~	OBSOLETE
15	38.10	1-5	
16	40.64	~~1-6~~	OBSOLETE
17	43.18	1-7	
18	45.72	1-8	
19	48.26	1-9	
20	50.80	2-0	
21	53.34	~~2-1~~	OBSOLETE
22	55.88	~~2-2~~	
23	58.42	~~2-3~~	6
24	60.96	~~2-4~~	
25	63.50	~~2-5~~	OBSOLETE
26	66.04	~~2-6~~	OBSOLETE
27	68.58	~~2-7~~	6
28	71.12	~~2-8~~	
29	73.66	~~2-9~~	
30	76.20	3-0	
31	78.74	~~3-1~~	OBSOLETE
32	81.28	~~3-2~~	
33	83.82	~~3-3~~	6
34	86.36	~~3-4~~	
35	88.90	3-5	
36	91.44	~~3- 829 576-6~~	OBSOLETE 6

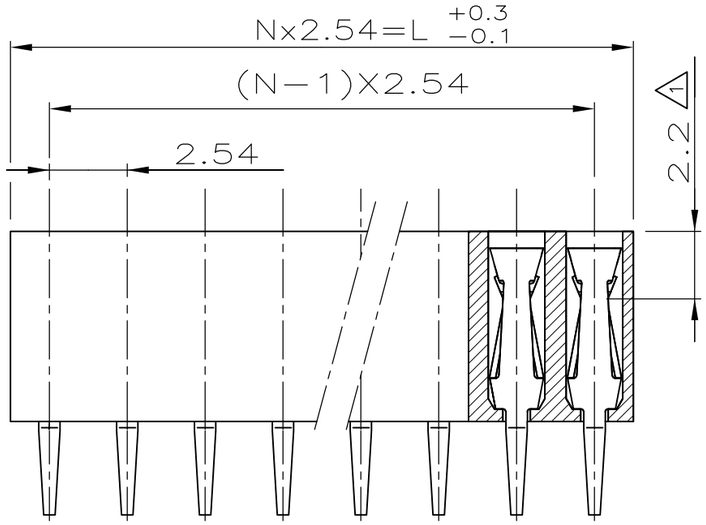

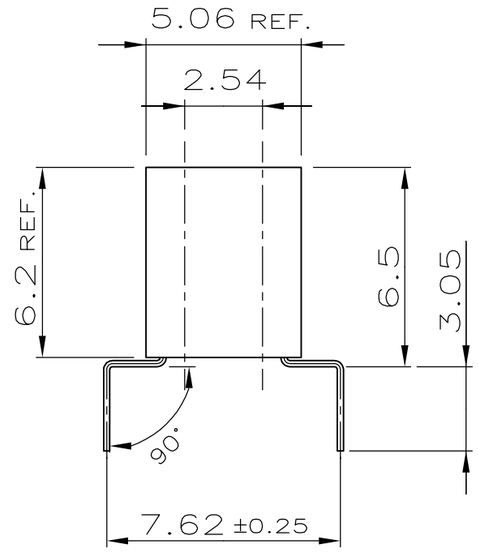

NOTES:

1. CONTACT-POINT.
2. PLATING: 2.5 – 4.0µm TIN OVER 0.5µm NICKEL
3. RECOMMENDED P.C.BOARD-THICKNESS: 1.6 mm
4. MATES WITH 0.63 SQUARE/ROUND MODU POSTS.
5. HV100 CONNECTOR PACKED IN ANTI-STATIC BLISTER TRAY
6. OBSOLETE PARTS: OBSOLETE CIS STREAMLINING PER D.RENAUD/D.SINISI

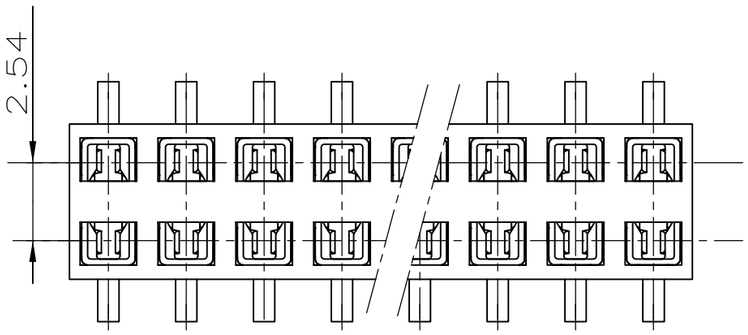

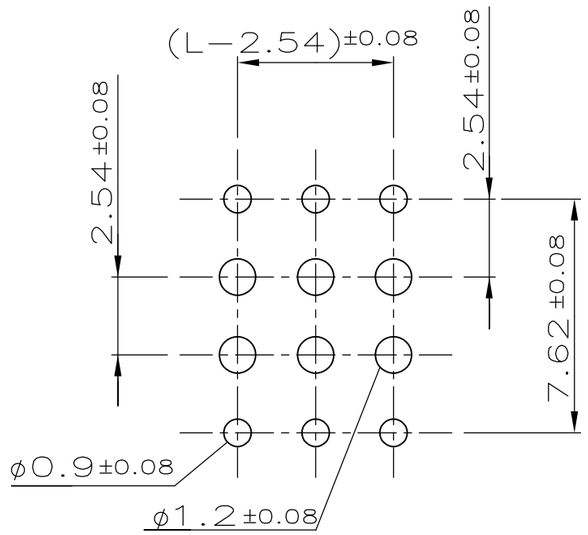

P.C.-BOARD HOLE-PATTERN

HV 100 CONTACT	CuSn	2
HV 100 HOUSING	PBT	GREEN
DESCRIPTION	MATERIAL	FINISH/COLOR

THIS DRAWING IS A CONTROLLED DOCUMENT.

DIMENSIONS: mm

TOLERANCES UNLESS OTHERWISE SPECIFIED: ±0.15
0 PLC ± –
1 PLC ± –
2 PLC ± –
3 PLC ± –
4 PLC ± –
ANGLES ± 3°

MATERIAL: SEE TABLE
FINISH: SEE TABLE

DWN A.HO 03.04.90
CHK M.SCHAARSCHMIDT –
APVD –
PRODUCT SPEC 108-19056
APPLICATION SPEC –
WEIGHT –

TE Connectivity

NAME: HV100 CONN. VERTICAL, 6.2mm BOTTOM/TOP ENTRY, DUAL ROW, TIN

SIZE	CAGE CODE	DRAWING NO	RESTRICTED TO
A3	00779	C-829576	–

CUSTOMER DRAWING | SCALE 5:1 | SHEET 1 OF 1 | REV C1